H3-45

REV.	DATE	O.C.	EFF.	DESCRIPTION	PAGE(S)	BY	CHECKED	APPROVED
0	2017-12-06	2015007	F-2902	NAE PROTOTYPE	0, 1.1 to 41.1	M.P.	C.Lem.	C.Lem.
			J-3934	PRELIMINARY	ALL			
			J-0086	PRELIMINARY				
			J-0124	PRELIMINARY				
			J-0185	START OF PRODUCTION				
1	2018-05-25	2018011	K-0370	RELS	0, 15.1, 26.2, C1, G	G.P.	C.Lem.	C.Lem.
				UPDATE	3.2, 17.1			
2	2018-06-11	N/A	K-0400	UPDATE	0, 26.5, G	E.L.	C.Lem.	C.Lem.
3	2018-07-17	N/A	K-0400	PASSENGER ENTERTAINMENT SYSTEM	0, A, 35.9	M.P.	C.Lem.	C.Lem.
4	2018-08-22	2015007	K-0412	FIRST NAE ISHIFT TRANSMISSION UPDATE	0, K, 4.1, 4.2, 15.2	M.P.	C.Lem.	C.Lem.
4-1	2018-09-01	2018076	K-0493	NEW DEFROST	0, 18.1	S.B	C.Lem	C.Lem
5	2018-10-23	2018060	K-0511	KLAXON PNEUMATIQUE	0, C1, G	G.P.	C.Lem.	C.Lem.
6	2018-11-05	2018108	K0523	INVERTER DRIVER DISPLAY CABLE	0, 2.2, 40.1, C1, E, G	E.L.	C.Lem.	C.Lem.
		N/A	- - - - - -	PAGES UPDATED	17.1, 18.2			
7	2018-12-12	2018051	K-0575	HARNESS CHAIN FOR WCL DOOR	0, C1	S.B.	C.Lem.	C.Lem.
8	2019-01-09	2018055	K-0605	OBD19	0, 8.1, 14.1, 14.2, 15.1, A, C1, G, H	G.P.	C.Lem.	C.Lem.
		2018110	K-0605	GIGAVAC	3.1	G.P.	C.Lem.	C.Lem.
		2018124	K-0605	CURB LIGHT READY	18.3, 20.1, 22.2, 23.1	S.B.	C.Lem.	C.Lem.

H3-45

REV.	DATE	O.C.	EFF.	DESCRIPTION	PAGE(S)	BY	CHECKED	APPROVED
8	2019-01-09	2018012	K-0605	REMY ALTERNATOR READY	1.1, 1.2, 2.1, 2.2 5.1, 17.1	G.P. S.B.	C.Lem. C.Lem.	C.Lem. C.Lem.
9	2019-01-30	2018055	K-0605	TPMS LITE OPTION	0, 38.1, 39.1	Gab	A.B.	A.B.
10	2019-01-31	2018042	K-0655	New water Preheate	0, C1, G, L, K, 5.1, 17.1	S.B.	C.Lem.	C.Lem.
11	2019-05-28	2017121 2018156 2019026 2019028	L-0823	Aesys new destination sign Surrounding Cameras system w/ISM TGW2 : AM-FM Antenna Roof Hatch with fan	0, A,C1, G, 1.1, 2.1, 2.2, 3.2, 4.1, 4.2, 5.2, 15.1,18.5, 19.1, 26.5, 28.1, 28.2, 35.6, 35.7, 35.9, 37.1, 44.0	E.L. G.P.	C.Lem.	C.Lem.
12	2019-06-19	2019083	L-0889	Replaced pitman arm switch by steering angle sensor	0, 2.1, 32.1	M.P.	A.B.	A.B.
13	2019-07-04	2019093 2018149	 L-0909	Dashboard Foot Damper Obsolescence TPMS Gateway	0, G, 18.1 6.2, 39.1	Gab Gab	C.Lem. A.B.	C.Lem. A.B.
14	11-02-2020	2020002	L-1055	Urée PWR	0, 3.1, 5.1, 14.2, C1, G	S.B.	C.Lem.	C.Lem.
15	2020-03-17	2019037	L-1138	Driver assist Digital dash light dimmer Roof hatches with fan ready	0, A, C1, 2.1, 4.1, 6.2, 10.1, 16.2, 39.1 19.1 18.5	M.P.	M.L.	M.L.

	WIRING DIAGRAM	DWG NO.: D061640 p0.2	REV.: 20

H3-45

REV.	DATE	O.C.	EFF.	DESCRIPTION	PAGE(S)	BY	CHECKED	APPROVED
16	28-01-2021	2021001		OBD21	0,17.1,14.1,12.1,3.2,5.1,6.2,C	S.B.	C.Lem.	C.Lem.
				SB247	4.1,4.2,G,45.0,19.1,2.1	S.C	C.Lem.	C.Lem.
				E Mirror	31.2,A	S.C	C.Lem.	C.Lem.
17	16-03-2021	2021002	N-1173	HMI Update	0, 35.3, 35.6,	S.C.	C.Lem.	C.Lem.
18	24/08/2021	2020017		SB247 Update	0, 45.0	S.C.	C.Lem.	C.Lem.
19	27-09-2021	2021002		HMI Update	0, 35.3, 35.6	S.C	C.Lem.	C.Lem.
20	3-12-2021	2022001	P-1269	OBD22, UPDATE	0,C1,G,14.2,18.2	S.B.	G.P	G.P

Wiring diagram pages list

Wiring diagram pages		D		I		S	
Multiplex outputs list	**B1**	Dash lights	19.1	Indirect lighting	23.1	Sound system	35.6 - 35.8
Multiplex inputs list	**B2**	Destination sign	28.2	Ignition	3.2	Sound sys.-Speakers	35.2
Multiplex error messages	**B3**	Digital clock	28.1			Sound sys.-Video dist.	35.3
Layout vehicule - harness	**C1**	Driver's light & backlight	19.1			Sound sys.-Seat audio	35.7
Sound system	**C2**	Driver window	30.1	**K**		Spares wires	8.1
Pins configuration	**D**			Kneeling system	32.1	Stop lights	26.2
Circuits list	**E**	**E**				Steering control ZF	37.2
Circuit breakers list	**F**	Emergency & Aisle lights	20.1	**L**		Steering multifunctions	41.1
Connectors list	**G**	Engine ECU	14.1	Lavatory	11.1	Step lights	29.1
Diodes list	**H**	Engine heater	14.1	Low buoy	32.1	Sun visor	41.1
Resistors list	**J**	Engine start	3.2	Luggage door lock/unlock	33.1		
Relays list	**K**	Engine & RJB cmpt. Light	25.1			**T**	
Fuses list	**L**	Entrance door & lights	29.1	**M**		Tag	32.1
Wire identification chart	**M**	ESP	16.1	Main dist. ignition & batt.	3.1	Tail & licence lights	26.2
				Markers lights	26.1 - 26.2	Tire pressure monitor	39.1
A		**F**		Mirrors	31.1	Trailer package	26.4
ACB	39.1	Fast idle	14.1	Multiplex power distribution	7.1	Trailer park brake	12.2
Air dryer	37.1	Fans radiator	13.1	Multiplex network	6.1 - 6.2	Transmission ECU	15.1-15.2
Alternators	1.1	Fire alarm	38.1				
		Fire suppression system	38.1	**P**		**U**	
B		Flashers	26.1-26.2	Parcel rack A/C system	18.3	Upper defrost	18.4
Back-up camera	28.1	Fog lights	26.5	Park brake sensor	12.1	Urea system	14.2
Back-up warnings	26.3	Fuel gauge	10.1	Park brake trailer sensor	12.2		
Batteries & Equalizer	1.1			Power distribution FJB 12V	4.1	**V**	
Battery charger	17.1	**G**		Power distribution FJB 24V	4.2	Volvo link TGW	37.1
Brake pedal sensor	12.1	Grounds electronic	2.1	Pwr dist. RJB 12V & 24V	5.1		
		Grounds chassis	2.2	Power outlets 12V	30.2	**W**	
C				Power outlets 120VAC	40.1	Water pre-heater	17.1
Cigar lighter	30.2					Wheel chair lift Ricon	36.1
Clearance lights	26.1-26.2	**H**		**R**		Windows ajar	27.1
Cluster	10.1	Hazard	26.1	Reading lamps	22.2	Wipers & washer	34.1
Cornering lights	26.5	Head lights	26.1	Retarder	12.1 - 15.1		
Cruise control	14.1	Horn	9.1				
		Hostess chime	22.2				
		Hvac defroster	18.1				
		Hvac passenger	18.2				

Wiring diagram pages list

Wiring diagram pages		D		I		S	
Multiplex outputs list	**B1**	Dash lights	19.1	Indirect lighting	23.1	Sound system	35.6 - 35.8
Multiplex inputs list	**B2**	Destination sign	28.2	Ignition	3.2	Sound sys.-Speakers	35.2
Multiplex error messages	**B3**	Digital clock	28.1			Sound sys.-Video dist.	35.3
Layout vehicule - harness	**C1**	Driver's light & backlight	19.1			Sound sys.-Seat audio	35.7
Sound system	**C2**	Driver window	30.1	**K**		Spares wires	8.1
Pins configuration	**D**			Kneeling system	32.1	Stop lights	26.2
Circuits list	**E**	**E**				Steering control ZF	37.2
Circuit breakers list	**F**	Emergency & Aisle lights	20.1	**L**		Steering multifunctions	41.1
Connectors list	**G**	Engine ECU	14.1	Lavatory	11.1	Step lights	29.1
Diodes list	**H**	Engine heater	14.1	Low buoy	32.1	Sun visor	41.1
Resistors list	**J**	Engine start	3.2	Luggage door lock/unlock	33.1		
Relays list	**K**	Engine & RJB cmpt. Light	25.1			**T**	
Fuses list	**L**	Entrance door & lights	29.1	**M**		Tag	32.1
Wire identification chart	**M**	ESP	16.1	Main dist. ignition & batt.	3.1	Tail & licence lights	26.2
				Markers lights	26.1 - 26.2	Tire pressure monitor	39.1
A		**F**		Mirrors	31.1	Trailer package	26.4
ACB	39.1	Fast idle	14.1	Multiplex power distribution	7.1	Trailer park brake	12.2
Air dryer	37.1	Fans radiator	13.1	Multiplex network	6.1 - 6.2	Transmission ECU	15.1-15.2
Alternators	1.1	Fire alarm	38.1				
		Fire suppression system	38.1	**P**		**U**	
B		Flashers	26.1-26.2	Parcel rack A/C system	18.3	Upper defrost	18.4
Back-up camera	28.1	Fog lights	26.5	Park brake sensor	12.1	Urea system	14.2
Back-up warnings	26.3	Fuel gauge	10.1	Park brake trailer sensor	12.2		
Batteries & Equalizer	1.1			Power distribution FJB 12V	4.1	**V**	
Battery charger	17.1	**G**		Power distribution FJB 24V	4.2	Volvo link TGW	37.1
Brake pedal sensor	12.1	Grounds electronic	2.1	Pwr dist. RJB 12V & 24V	5.1		
		Grounds chassis	2.2	Power outlets 12V	30.2	**W**	
C				Power outlets 120VAC	40.1	Water pre-heater	17.1
Cigar lighter	30.2			Passenger ent. System	35.9	Wheel chair lift Ricon	36.1
Clearance lights	26.1-26.2	**H**				Windows ajar	27.1
Cluster	10.1	Hazard	26.1	**R**		Wipers & washer	34.1
Cornering lights	26.5	Head lights	26.1	Reading lamps	22.2		
Cruise control	14.1	Horn	9.1	Retarder	12.1 - 15.1		
		Hostess chime	22.2				
		Hvac defroster	18.1				
		Hvac passenger	18.2				

Wiring diagram pages list

Wiring diagram pages		D		I		S	
Multiplex outputs list	**B1**	Dash lights	19,1	Indirect lighting	23,1	Sound system	35.6 - 35.8
Multiplex inputs list	**B2**	Destination sign	28,2	Ignition	3,2	Sound sys.-Speakers	35,2
Multiplex error messages	**B3**	Digital clock	28,1			Sound sys.-Video dist.	35,3
Layout vehicule - harness	**C1**	Driver's light & backlight	19,1			Sound sys.-Seat audio	35,7
Sound system	**C2**	Driver window	30,1	**K**		Spares wires	8,1
Pins configuration	**D**			Kneeling system	32,1	Stop lights	26,2
Circuits list	**E**	**E**				Steering control ZF	37,2
Circuit breakers list	**F**	Emergency & Aisle lights	20,1	**L**		Steering multifunctions	41,1
Connectors list	**G**	Engine ECU	14,1	Lavatory	11,1	Step lights	29,1
Diodes list	**H**	Engine heater	14,1	Low buoy	32,1	Sun visor	41,1
Resistors list	**J**	Engine start	3,2	Luggage door lock/unlock	33,1		
Relays list	**K**	Engine & RJB cmpt. Light	25,1			**T**	
Fuses list	**L**	Entrance door & lights	29,1	**M**		Tag	32,1
Wire identification chart	**M**	ESP	16,1	Main dist. ignition & batt.	3,1	Tail & licence lights	26,2
				Markers lights	26.1 - 26.2	Tire pressure monitor	39,1
A		**F**		Mirrors	31,1	Trailer package	26,4
ACB	39,1	Fast idle	14,1	Multiplex power distribution	7,1	Trailer park brake	12,2
Air dryer	37,1	Fans radiator	13,1	Multiplex network	6.1 - 6.2	Transmission ECU	15.1-15.2
Alternators	1,2	Fire alarm	38,1				
		Fire suppression system	38,1	**P**		**U**	
B		Flashers	26.1-26.2	Parcel rack A/C system	18,3	Upper defrost	18,4
Back-up camera	28,1	Fog lights	26,5	Park brake sensor	12,1	Urea system	14,2
Back-up warnings	26,3	Fuel gauge	10,1	Park brake trailer sensor	12,2		
Batteries & Equalizer	1,1			Power distribution FJB 12V	4,1	**V**	
Battery charger	17,1	**G**		Power distribution FJB 24V	4,2	Volvo link TGW	37,1
Brake pedal sensor	12,1	Grounds electronic	2,1	Pwr dist. RJB 12V & 24V	5,1		
		Grounds chassis	2,2	Power outlets 12V	30,2	**W**	
C				Power outlets 120VAC	40,1	Water pre-heater	17,1
Cigar lighter	30,2			Passenger ent. System	35,9	Wheel chair lift Ricon	36,1
Clearance lights	26.1-26.2	**H**				Windows ajar	27,1
Cluster	10,1	Hazard	26,1	**R**		Wipers & washer	34,1
Cornering lights	26,5	Head lights	26,1	Reading lamps	22,2		
Cruise control	14,1	Horn	9,1	Retarder	12.1 - 15.1		
		Hostess chime	22,2				
		Hvac defroster	18,1				
		Hvac passenger	18,2				

Wiring diagram pages list

Wiring diagram pages		D		I		S	
Multiplex outputs list	**B1**	Dash lights	19.1	Indirect lighting	23.1	Sound system	35.6 - 35.8
Multiplex inputs list	**B2**	Destination sign	28.2	Ignition	3.2	Sound sys.-Speakers	35.2
Multiplex error messages	**B3**	Digital clock	28.1			Sound sys.-Video dist.	35.3
Layout vehicule - harness	**C1**	Driver's light & backlight	19.1			Sound sys.-Seat audio	35.7
Sound system	**C2**	Driver window	30.1	**K**		Spares wires	8.1
Pins configuration	**D**			Kneeling system	32.1	Stop lights	26.2
Circuits list	**E**	**E**				Steering control ZF	37.2
Circuit breakers list	**F**	Emergency & Aisle lights	20.1	**L**		Steering multifunctions	41.1
Connectors list	**G**	Engine ECU	14.1	Lavatory	11.1	Step lights	29.1
Diodes list	**H**	Engine heater	14.1	Low buoy	32.1	Surrounding Cameras	44.0
Resistors list	**J**	Engine start	3.2	Luggage door lock/unlock	33.1	Sun visor	41.1
Relays list	**K**	Engine & RJB cmpt. Light	25.1				
Fuses list	**L**	Entrance door & lights	29.1	**M**			
Wire identification chart	**M**	ESP	16.1	Main dist. ignition & batt.	3.1	**T**	
				Markers lights	26.1 - 26.2	Tag	32.1
A		**F**		Mirrors	31.1	Tail & licence lights	26.2
ACB	39.1	Fast idle	14.1	Multiplex power distribution	7.1	Tire pressure monitor	39.1
Air dryer	37.1	Fans radiator	13.1	Multiplex network	6.1 - 6.2	Trailer package	26.4
Alternators	1.2	Fire alarm	38.1			Trailer park brake	12.2
		Fire suppression system	38.1	**P**		Transmission ECU	15.1-15.2
B		Flashers	26.1-26.2	Parcel rack A/C system	18.3		
Back-up camera	28.1	Fog lights	26.5	Parcel rack ISM	5.2	**U**	
Back-up warnings	26.3	Fuel gauge	10.1	Park brake sensor	12.1	Upper defrost	18.4
Batteries & Equalizer	1.1			Park brake trailer sensor	12.2	Urea system	14.2
Battery charger	17.1	**G**		Power distribution FJB 12V	4.1		
Brake pedal sensor	12.1	Grounds electronic	2.1	Power distribution FJB 24V	4.2	**V**	
		Grounds chassis	2.2	Pwr dist. RJB 12V & 24V	5.1	Volvo link TGW	37.1
C				Power outlets 12V	30.2		
Cigar lighter	30.2			Power outlets 120VAC	40.1	**W**	
Clearance lights	26.1-26.2	**H**		Passenger ent. System	35.9	Water pre-heater	17.1
Cluster	10.1	Hazard	26.1			Wheel chair lift Ricon	36.1
Cornering lights	26.5	Head lights	26.1	**R**		Windows ajar	27.1
Cruise control	14.1	Horn	9.1	Reading lamps	22.2	Wipers & washer	34.1
		Hostess chime	22.2	Retarder	12.1 - 15.1		
		Hvac defroster	18.1	Roof hatches w/fan	18.5		
		Hvac passenger	18.2				

Wiring diagram pages list

Wiring diagram pages		D		I		S	
Multiplex outputs list	**B1**	Dash lights	19.1	Indirect lighting	23.1	Sound system	35.6 - 35.8
Multiplex inputs list	**B2**	Destination sign	28.2	Ignition	3.2	Sound sys.-Speakers	35.2
Multiplex error messages	**B3**	Digital clock	28.1			Sound sys.-Video dist.	35.3
Layout vehicule - harness	**C1**	Driver assist	16.2	**K**		Sound sys.-Seat audio	35.7
Sound system	**C2**	Driver's light & backlight	19.1	Kneeling system	32.1	Spares wires	8.1
Pins configuration	**D**	Driver window	30.1			Stop lights	26.2
Circuits list	**E**	**E**		**L**		Steering control ZF	37.2
Circuit breakers list	**F**	Emergency & Aisle lights	20.1	Lavatory	11.1	Steering multifunctions	41.1
Connectors list	**G**	Engine ECU	14.1	Line departure warning	16.2	Step lights	29.1
Diodes list	**H**	Engine heater	14.1	Low buoy	32.1	Surrounding Cameras	44.0
Resistors list	**J**	Engine start	3.2	Luggage door lock/unlock	33.1	Sun visor	41.1
Relays list	**K**	Engine & RJB cmpt. Light	25.1				
Fuses list	**L**	Entrance door & lights	29.1	**M**			
Wire identification chart	**M**	ESP	16.1	Main dist. ignition & batt.	3.1	**T**	
				Markers lights	26.1 - 26.2	Tag	32.1
A		**F**		Mirrors	31.1	Tail & licence lights	26.2
Air dryer	37.1	Fast idle	14.1	Multiplex power distribution	7.1	Tire pressure monitor	39.1
Alternators	1.2	Fans radiator	13.1	Multiplex network	6.1 - 6.2	Trailer package	26.4
		Fire alarm	38.1			Trailer park brake	12.2
		Fire suppression system	38.1	**P**		Transmission ECU	15.1-15.2
B		Flashers	26.1-26.2	Parcel rack A/C system	18.3		
Back-up camera	28.1	Fog lights	26.5	Parcel rack ISM	5.2	**U**	
Back-up warnings	26.3	Fuel gauge	10.1	Park brake sensor	12.1	Upper defrost	18.4
Batteries & Equalizer	1.1			Park brake trailer sensor	12.2	Urea system	14.2
Battery charger	17.1	**G**		Power distribution FJB 12V	4.1		
Brake pedal sensor	12.1	Grounds electronic	2.1	Power distribution FJB 24V	4.2	**V**	
		Grounds chassis	2.2	Pwr dist. RJB 12V & 24V	5.1	Volvo link TGW	37.1
C				Power outlets 12V	30.2		
Cigar lighter	30.2			Power outlets 120VAC	40.1	**W**	
Clearance lights	26.1-26.2	**H**		Passenger ent. System	35.9	Water pre-heater	17.1
Cluster	10.1	Hazard	26.1			Wheel chair lift Ricon	36.1
Cornering lights	26.5	Head lights	26.1	**R**		Windows ajar	27.1
Cruise control	14.1	Horn	9.1	Reading lamps	22.2	Wipers & washer	34.1
		Hostess chime	22.2	Retarder	12.1 - 15.1		
		Hvac defroster	18.1	Roof hatches w/fan	18.5		
		Hvac passenger	18.2				

Wiring diagram pages list

Wiring diagram pages		D		I		S	
Multiplex outputs list	**B1**	Dash lights	19.1	Indirect lighting	23.1	Sound system	35.6 - 35.8
Multiplex inputs list	**B2**	Destination sign	28.2	Ignition	3.2	Sound sys.-Speakers	35.2
Multiplex error messages	**B3**	Digital clock	28.1			Sound sys.-Video dist.	35.3
Layout vehicule - harness	**C1**	Driver assist	16.2	**K**		Sound sys.-Seat audio	35.7
Sound system	**C2**	Driver's light & backlight	19.1	Kneeling system	32.1	Spares wires	8.1
Pins configuration	**D**	Driver window	30.1			Stop lights	26.2
Circuits list	**E**	**E**		**L**		Steering control ZF	37.2
Circuit breakers list	**F**	Electronics Mirror	31.2	Lavatory	11.1	Steering multifunctions	41.1
Connectors list	**G**	Emergency & Aisle lights	20.1	Line departure warning	16.2	Step lights	29.1
Diodes list	**H**	Emergency Lighting SB47	45.0	Low buoy	32.1	Surrounding Cameras	44.0
Resistors list	**J**	Engine ECU	14.1	Luggage door lock/unlock	33.1	Sun visor	41.1
Relays list	**K**	Engine heater	14.1				
Fuses list	**L**	Engine start	3.2	**M**			
Wire identification chart	**M**	Engine & RJB cmpt. Light	25.1	Main dist. ignition & batt.	3.1	**T**	
		Entrance door & lights	29.1	Markers lights	26.1 - 26.2	Tag	32.1
A		ESP	16.1	Mirrors	31.1	Tail & licence lights	26.2
Air dryer	37.1			Multiplex power distribution	7.1	Tire pressure monitor	39.1
Alternators	1.2	**F**		Multiplex network	6.1 - 6.2	Trailer package	26.4
		Fast idle	14.1			Trailer park brake	12.2
		Fans radiator	13.1	**P**		Transmission ECU	15.1-15.2
B		Fire alarm	38.1	Parcel rack A/C system	18.3		
Back-up camera	28.1	Fire suppression system	38.1	Parcel rack ISM	5.2	**U**	
Back-up warnings	26.3	Flashers	26.1-26.2	Park brake sensor	12.1	Upper defrost	18.4
Batteries & Equalizer	1.1	Fog lights	26.5	Park brake trailer sensor	12.2	Urea system	14.2
Battery charger	17.1	Fuel gauge	10.1	Power distribution FJB 12V	4.1		
Brake pedal sensor	12.1			Power distribution FJB 24V	4.2	**V**	
		G		Pwr dist. RJB 12V & 24V	5.1	Volvo link TGW	37.1
C		Grounds electronic	2.1	Power outlets 12V	30.2		
Cigar lighter	30.2	Grounds chassis	2.2	Power outlets 120VAC	40.1	**W**	
Clearance lights	26.1-26.2	**H**		Passenger ent. System	35.9	Water pre-heater	17.1
Cluster	10.1	Hazard	26.1			Wheel chair lift Ricon	36.1
Cornering lights	26.5	Head lights	26.1	**R**		Windows ajar	27.1
Cruise control	14.1	Horn	9.1	Reading lamps	22.2	Wipers & washer	34.1
		Hostess chime	22.2	Retarder	12.1 - 15.1		
		Hvac defroster	18.1	Roof hatches w/fan	18.5		
		Hvac passenger	18.2				

MULTIPLEX OUTPUT LIST

Module.Pin#	Signal name	Ignition Key switch	Page	Connected devices	Input involved		
A36.JA:10	O_CutOutRelGnd	Emergency CutOut Relay	3.2		B_BatterySaver	.	
					B_EngineRun	.	
					B_TstModExtLight	.	
					I_EntDorClSe	A47.J1:21	
					I_EntDorOpSw2	A47.J2:5	
					I_FireExt2ndAlm	A36.JB:21	38.1
					I_HazardSw	A36.JB:4	26.1
					I_IgnKeySw	A36.JB:2	3.2
					I_IntDorOpSw	A56.J2:3	
					I_WCLDoorLtch	A57.J1:2	
					I_WCLFirstLatch	A57.J2:1	
					I_WCLLoDorSe	A57.J1:17	
					I_WclSw	A55.J2:7	
A36.JA:11	O_FireExtR36		9.1	R36:86	I_FireExt1stAl	A36.JB:23	38.1
					I_FireExt2ndAlm	A36.JB:21	38.1
					I_FireSensorA36	A36.JB:5	38.1
					I_HornSw	A56.J2:7	
					I_IgnKeySw	A36.JB:2	3.2
					I_WebFireComp	A36.JB:14	
A36.JA:15	O_WakeUp	WakeUp Relay	3.2		B_BatterySaver	.	
					B_EngineRun	.	
					B_TstModExtLight	.	
					I_EntDorClSe	A47.J1:21	
					I_EntDorOpSw2	A47.J2:5	
					I_FireExt2ndAlm	A36.JB:21	38.1
					I_HazardSw	A36.JB:4	26.1
					I_IgnKeySw	A36.JB:2	3.2
					I_IntDorOpSw	A56.J2:3	
					I_WCLDoorLtch	A57.J1:2	
					I_WCLFirstLatch	A57.J2:1	
					I_WCLLoDorSe	A57.J1:17	
					I_WclSw	A55.J2:7	
A36.JA:17	O_CutOutRel	Emergency CutOut Relay	3.2	R21:1	B_BatterySaver	.	
					B_EngineRun	.	
					B_TstModExtLight	.	
					I_EntDorClSe	A47.J1:21	
					I_EntDorOpSw2	A47.J2:5	
					I_FireExt2ndAlm	A36.JB:21	38.1
					I_HazardSw	A36.JB:4	26.1
					I_IgnKeySw	A36.JB:2	3.2
					I_IntDorOpSw	A56.J2:3	
					I_WCLDoorLtch	A57.J1:2	
					I_WCLFirstLatch	A57.J2:1	

MULTIPLEX OUTPUT LIST

Module.Pin#	Signal name	Ignition Key switch	Page	Connected devices	Input involved			
A36.JA:17	O_CutOutRel	Emergency CutOut Relay	3.2	R21:1	I_WCLLoDorSe	A57.J1:17		
					I_WclSw	A55.J2:7		
A36.JA:18	O_CutOutRelRst	Emergency CutOut Relay	3.2	R21:4	B_BatterySaver	.		
					B_EngineRun	.		
					B_TstModExtLight	.		
					B_TstModHvac	.		
					I_CadecCrankDis	A45.J2:5		
					I_EngDoorSe	A52.J2:6		
					I_EngStaRrSw	A52.J2:5		
					I_EntDorClSe	A47.J1:21		
					I_EntDorOpSw2	A47.J2:5		
					I_FireExt2ndAlm	A36.JB:21	38.1	
					I_FrEngStaSw	A36.JB:22	3.2	
					I_HazardSw	A36.JB:4	26.1	
					I_IgnKeySw	A36.JB:2	3.2	
					I_IntDorOpSw	A56.J2:3		
					I_StartEna1	A52.J1:20		
					I_StartEna2	A36.JB:1	3.2	
					I_WCLDoorLtch	A57.J1:2		
					I_WCLFirstLatch	A57.J2:1		
					I_WCLLoDorSe	A57.J1:17		
					I_WclSw	A55.J2:7		
A36.JA:25	O_BrkRedCompat	Brake Redundant Compatible	12.1	A81.JA:5	D_VipSteering2	.		
					I_BrakePedPri	A51.J1:21		
					I_BrakePedSec	A36.JB:13	12.1	
					I_IgnKeySw	A36.JB:2	3.2	
					I_LowWiperCam	A47.J1:20		
					I_LwWipIntSw	A55.J2:10		
					I_LwWshSw	A55.J2:11		
					I_RetdrSig	A50.J1:20		
A36.JB:2	O_24VIDash	Ignition Key switch	3.2		I_IgnKeySw	A36.JB:2	3.2	#
A41.J1:1	O_24ViFjb				I_IgnKeySw	A36.JB:2	3.2	
A41.J1:10	O_TagAxlValve	Tag Axle Valve			I_IgnKeySw	A36.JB:2	3.2	
A41.J1:16	O_JacobBrk2	Jacob Brake 2			D_VipSteering1	.		
					D_VipSteering2	.		
					I_A41_NormalMode	.		
					I_BrakePedSec	A36.JB:13	12.1	
					I_IgnKeySw	A36.JB:2	3.2	
					I_LowWiperCam	A47.J1:20		
					I_LwWipIntSw	A55.J2:10		
					I_LwWshSw	A55.J2:11		
					I_RetarderSel	A55.J2:6		
					I_RetdrSig	A50.J1:20		

MULTIPLEX OUTPUT LIST

Module.Pin#	Signal name	Ignition Key switch	Page	Connected devices	Input involved		
A41.J1:19	O_JacobBrk1	Jacob Brake 1			D_VipSteering1	.	
					D_VipSteering2	.	
					I_A41_NormalMode	.	
					I_BrakePedSec	A36.JB:13	12.1
					I_IgnKeySw	A36.JB:2	3.2
					I_LowWiperCam	A47.J1:20	
					I_LwWipIntSw	A55.J2:10	
					I_LwWshSw	A55.J2:11	
					I_RetarderSel	A55.J2:6	
					I_RetdrSig	A50.J1:20	
A41.J1:3	O_WatchstepLb	Watch Your Step Light Bulb			I_EntDorClSe	A47.J1:21	
					I_IgnKeySw	A36.JB:2	3.2
A41.J1:4	O_LavOccFrLb				B_BatterySaver	.	
					B_EngineRun	.	
					B_TstModExtLight	.	
					I_EntDorClSe	A47.J1:21	
					I_EntDorOpSw2	A47.J2:5	
					I_FireExt2ndAlm	A36.JB:21	38.1
					I_HazardSw	A36.JB:4	26.1
					I_IgnKeySw	A36.JB:2	3.2
					I_IntDorOpSw	A56.J2:3	
					I_LavDorLockSe	A53.J2:5	
					I_LavEmrgSw	A53.J1:21	
					I_WCLDoorLtch	A57.J1:2	
					I_WCLFirstLatch	A57.J2:1	
					I_WCLLoDorSe	A57.J1:17	
					I_WclSw	A55.J2:7	
A41.J1:7	O_ShutDownRly				B_EngineRun	.	
					I_A41_NormalMode	.	
					I_CadecEngShtDw	A45.J1:21	
					I_FireExt2ndAlm	A36.JB:21	38.1
					I_IgnKeySw	A36.JB:2	3.2
A42.J1:1	O_KneeCtlSol	Kneeling Control Solenoid			I_IgnKeySw	A36.JB:2	3.2
					I_KneeLevelSe	A42.J2:1	
					I_KneeSw	A42.J1:5	
					I_ParkBrSe	A36.JB:9	12.1
A42.J1:10	O_ParkBrSol	Park Brake Solenoid Valve			I_IgnKeySw	A36.JB:2	3.2
					I_KneeLevelSe	A42.J2:1	
					I_KneeSw	A42.J1:5	
					I_ParkBrSe	A36.JB:9	12.1
					I_WCLDoorLtch	A57.J1:2	
					I_WCLFirstLatch	A57.J2:1	
					I_WCLLoDorSe	A57.J1:17	

MULTIPLEX OUTPUT LIST

Module.Pin#	Signal name	Ignition Key switch	Page	Connected devices	Input involved		
A42.J1:10	O_ParkBrSol	Park Brake Solenoid Valve			I_WclSw	A55.J2:7	
A42.J1:13	O_ParkBrSolNeg	Park Brake Solenoid Return			I_IgnKeySw	A36.JB:2	3.2
					I_KneeLevelSe	A42.J2:1	
					I_KneeSw	A42.J1:5	
					I_ParkBrSe	A36.JB:9	12.1
					I_WCLDoorLtch	A57.J1:2	
					I_WCLFirstLatch	A57.J2:1	
					I_WCLLoDorSe	A57.J1:17	
					I_WclSw	A55.J2:7	
A42.J1:16	O_ReHiBoySol	Rear Hi Buoy Solenoid			I_IgnKeySw	A36.JB:2	3.2
					I_KneeSw	A42.J1:5	
A42.J1:19	O_ReHiBoySolRtn	Rear Hi Buoy Solenoid Return			I_IgnKeySw	A36.JB:2	3.2
					I_KneeSw	A42.J1:5	
A42.J1:3	O_KneeDwSol	Kneeling Down Solenoid			I_IgnKeySw	A36.JB:2	3.2
					I_KneeLevelSe	A42.J2:1	
					I_KneeSw	A42.J1:5	
A42.J1:4	O_KneeUpSol	Kneeling Up Solenoid			I_IgnKeySw	A36.JB:2	3.2
					I_KneeLevelSe	A42.J2:1	
					I_KneeSw	A42.J1:5	
A42.J1:7	O_KneelingAlm	Kneeling Alarm			I_IgnKeySw	A36.JB:2	3.2
					I_KneeLevelSe	A42.J2:1	
					I_KneeSw	A42.J1:5	
A42.J2:15	O_5vKneePress				I_IgnKeySw	A36.JB:2	3.2
A43.J1:1	O_LugLkSol	Luggage Lock Solenoid			I_IgnKeySw	A36.JB:2	3.2
					I_LuggDoorSw	A56.J2:8	
A43.J1:10	O_AirDryer				I_IgnKeySw	A36.JB:2	3.2
A43.J1:3	O_LugULkSol	Luggage Lock Solenoid			I_IgnKeySw	A36.JB:2	3.2
					I_LuggDoorSw	A56.J2:8	
A43.J1:7	O_TPMSEcu				I_IgnKeySw	A36.JB:2	3.2
A43.J2:10	O_CruCtrlRsm	Cruise Control Resume Volvo			D_VipSteering1	.	
					I_A43_NormalMode	.	
					I_LowWiperCam	A47.J1:20	
					I_LwWipIntSw	A55.J2:10	
					I_LwWshSw	A55.J2:11	
A43.J2:7	O_CruCtrlSet	Cruise Control Set Volvo			D_VipSteering1	.	
					I_A43_NormalMode	.	
					I_LowWiperCam	A47.J1:20	
					I_LwWipIntSw	A55.J2:10	
					I_LwWshSw	A55.J2:11	
A44.J1:1	O_UpWiperMot	Upper Wiper Motor			B_BatterySaver	.	
					B_EngineRun	.	
					I_UpWipIntSw	A56.J2:2	
					I_UpWipSw	A55.J2:12	

MULTIPLEX OUTPUT LIST

Module.Pin#	Signal name	Ignition Key switch	Page	Connected devices	Input involved		
A44.J1:1	O_UpWiperMot	Upper Wiper Motor			I_UpWshSw	A55.J2:13	
A44.J1:10	O_HeadLmpWsh				I_HeadLmpWshSw	A56.J1:2	
A44.J1:13	O_UpDefFanMo	Upper defroster Fan Motor			B_BatterySaver	.	
					B_EngineRun	.	
					D_AmbTempLSB	.	
					D_AmbTempMSB	.	
					D_HvacModSig	.	
					I_BatMonMod47	A47.J1:24	
					I_UpperDefFanSw	A55.J2:8	
A44.J1:16	O_HornSol	Electric Horn			I_HornSw	A56.J2:7	
					I_IgnKeySw	A36.JB:2	3.2
A44.J1:19	O_UdrFlrLed	Under Floor Light led			B_BatterySaver	.	
					B_EngineRun	.	
					B_TstModExtLight	.	
					I_EntDorClSe	A47.J1:21	
					I_EntDorOpSw2	A47.J2:5	
					I_FireExt2ndAlm	A36.JB:21	38.1
					I_FrSrvCptOpenSe	A41.J2:11	
					I_HazardSw	A36.JB:4	26.1
					I_IgnKeySw	A36.JB:2	3.2
					I_IntDorOpSw	A56.J2:3	
					I_LuggDrOpenSe	A41.J2:4	
					I_WCLDoorLtch	A57.J1:2	
					I_WCLFirstLatch	A57.J2:1	
					I_WCLLoDorSe	A57.J1:17	
					I_WclSw	A55.J2:7	
A44.J1:3	O_UpWshPmp	Upper Wiper Washer Pump			B_BatterySaver	.	
					B_EngineRun	.	
					I_UpWshSw	A55.J2:13	
A44.J1:4	O_EntLtLed	Entrance Door Light Bulb			B_BatterySaver	.	
					B_EngineRun	.	
					B_TstModExtLight	.	
					I_EntDorClSe	A47.J1:21	
					I_EntDorOpSw2	A47.J2:5	
					I_FireExt2ndAlm	A36.JB:21	38.1
					I_HazardSw	A36.JB:4	26.1
					I_IgnKeySw	A36.JB:2	3.2
					I_IntDorOpSw	A56.J2:3	
					I_WCLDoorLtch	A57.J1:2	
					I_WCLFirstLatch	A57.J2:1	
					I_WCLLoDorSe	A57.J1:17	
					I_WclSw	A55.J2:7	
A44.J1:7	O_LwWshPmp	Lower Wiper Washer Pump			I_LwWshSw	A55.J2:11	

MULTIPLEX OUTPUT LIST

Module.Pin#	Signal name	Ignition Key switch	Page	Connected devices	Input involved		
A44.J2:1	O_SunVisorPsPMO				D_VipSteering1	.	
					D_VipSteering2	.	
					I_A44_NormalMode	.	
					I_IgnKeySw	A36.JB:2	3.2
					I_SunVisorDrv	A44.J2:5	
					I_SunVisorPass	A44.J2:6	
A44.J2:10	O_SunVisorDrPMO				D_VipSteering1	.	
					D_VipSteering2	.	
					I_A44_NormalMode	.	
					I_IgnKeySw	A36.JB:2	3.2
					I_SunVisorDrv	A44.J2:5	
					I_SunVisorPass	A44.J2:6	
A44.J2:13	O_SunVisorDrNMO				D_VipSteering1	.	
					D_VipSteering2	.	
					I_A44_NormalMode	.	
					I_IgnKeySw	A36.JB:2	3.2
					I_SunVisorDrv	A44.J2:5	
					I_SunVisorPass	A44.J2:6	
A44.J2:4	O_SunVisorPsNMO				D_VipSteering1	.	
					D_VipSteering2	.	
					I_A44_NormalMode	.	
					I_IgnKeySw	A36.JB:2	3.2
					I_SunVisorDrv	A44.J2:5	
					I_SunVisorPass	A44.J2:6	
A44.J2:7	O_DriverLtLed				B_BatterySaver	.	
					B_EngineRun	.	
					B_TstModExtLight	.	
					I_DrvLtSw	A55.J2:1	
					I_EntDorClSe	A47.J1:21	
					I_EntDorOpSw2	A47.J2:5	
					I_FireExt2ndAlm	A36.JB:21	38.1
					I_HazardSw	A36.JB:4	26.1
					I_IgnKeySw	A36.JB:2	3.2
					I_IntDorOpSw	A56.J2:3	
					I_WCLDoorLtch	A57.J1:2	
					I_WCLFirstLatch	A57.J2:1	
					I_WCLLoDorSe	A57.J1:17	
					I_WclSw	A55.J2:7	
A45.J1:1	O_DashTrapPMo	Dash Trap Motor			D_HvacModSig	.	
					D_HvacModSig1	.	
					I_IgnKeySw	A36.JB:2	3.2
A45.J1:16	O_Mirrors				I_IgnKeySw	A36.JB:2	3.2
A45.J1:3	O_DashTrapNMo	Dash Trap Motor			D_HvacModSig	.	

MULTIPLEX OUTPUT LIST

Module.Pin#	Signal name	Ignition Key switch	Page	Connected devices	Input involved		
A45.J1:3	O_DashTrapNMo	Dash Trap Motor Return			D_HvacModSig1	.	
					I_IgnKeySw	A36.JB:2	3.2
A45.J1:4	O_VarSteeringPwr				I_IgnKeySw	A36.JB:2	3.2
A45.J2:1	O_FootTrpPSol	Foot Trap Solenoid			D_HvacModSig	.	
					D_HvacModSig1	.	
					I_IgnKeySw	A36.JB:2	3.2
A45.J2:10	O_VanscoCtrl				I_IgnKeySw	A36.JB:2	3.2
A45.J2:13	O_WdowDrvDwMo	Window driver up motor			I_IgnKeySw	A36.JB:2	3.2
					I_WdowDrvSw	A56.J2:9	
A45.J2:4	O_FootTrpNSol	Foot Trap Solenoid			D_HvacModSig	.	
					D_HvacModSig1	.	
					I_IgnKeySw	A36.JB:2	3.2
A45.J2:7	O_WdowDrvUpMo	Window driver up motor			I_IgnKeySw	A36.JB:2	3.2
					I_WdowDrvSw	A56.J2:9	
A46.J1:1	O_LHFogLb1	Left Hand Fog Light Bulb			B_BatterySaver	.	
					B_EngineRun	.	
					B_TstModExtLight	.	
					I_BatMonMod46	A46.J1:24	
					I_FogLightSw	A56.J2:5	
					I_HdLtHiLowBmSw	A56.J1:21	
					I_HiBeamCallSw	A56.J1:20	
A46.J1:10	O_FrClearLb	Front Clearance Lights Bulb			B_BatterySaver	.	
					B_EngineRun	.	
					B_TstModExtLight	.	
					I_FogLightSw	A56.J2:5	
					I_HdLtPos1Sw	A56.J1:17	
A46.J1:13	O_LHFrMkrLb	Left Hand Front Markers Light Bulb			B_BatterySaver	.	
					B_EngineRun	.	
					B_TstModExtLight	.	
					I_FogLightSw	A56.J2:5	
					I_HdLtPos1Sw	A56.J1:17	
A46.J1:4	O_LHFrFlshLb	Left Hand Front Flasher Light Bulb			B_BatterySaver	.	
					B_EngineRun	.	
					B_TstModExtLight	.	
					I_EntDorClSe	A47.J1:21	
					I_EntDorOpSw2	A47.J2:5	
					I_HazardSw	A36.JB:4	26.1
					I_IgnKeySw	A36.JB:2	3.2
					I_IntDorOpSw	A56.J2:3	
					I_LHFlshSw	A46.J1:20	
					I_LHFlshSwRrSig	A51.J1:20	
					I_RHFlshSwRrSig	A51.J2:5	
					I_WCLDoorLtch	A57.J1:2	

MULTIPLEX OUTPUT LIST

Module.Pin#	Signal name	Ignition Key switch	Page	Connected devices	Input involved		
A46.J1:4	O_LHFrFlshLb	Left Hand Front Flasher Light Bulb			I_WCLFirstLatch	A57.J2:1	
					I_WCLLoDorSe	A57.J1:17	
					I_WclSw	A55.J2:7	
A46.J1:7	O_LHCornerLmpX3				B_BatterySaver	.	
					B_EngineRun	.	
					B_TstModExtLight	.	
					I_CorneringLtSw	A56.J2:6	
					I_IgnKeySw	A36.JB:2	3.2
					I_LHFlshSw	A46.J1:20	
A46.J2:4	O_LHHiBmLb	Left Hand Hi Beam Light Bulb			B_BatterySaver	.	
					B_EngineRun	.	
					B_TstModExtLight	.	
					I_BatMonMod46	A46.J1:24	
					I_HdLtHiLowBmSw	A56.J1:21	
					I_HiBeamCallSw	A56.J1:20	
					I_ParkBrSe	A36.JB:9	12.1
A46.J2:7	O_LHLwBmLb	Left Hand Low Beam Light Bulb			B_BatterySaver	.	
					B_EngineRun	.	
					B_TstModExtLight	.	
					I_BatMonMod46	A46.J1:24	
					I_EntDorClSe	A47.J1:21	
					I_EntDorOpSw2	A47.J2:5	
					I_FireExt2ndAlm	A36.JB:21	38.1
					I_HazardSw	A36.JB:4	26.1
					I_HdLtHiLowBmSw	A56.J1:21	
					I_IgnKeySw	A36.JB:2	3.2
					I_IntDorOpSw	A56.J2:3	
					I_WCLDoorLtch	A57.J1:2	
					I_WCLFirstLatch	A57.J2:1	
					I_WCLLoDorSe	A57.J1:17	
					I_WclSw	A55.J2:7	
A47.J1:1	O_DrvRfgSol	Driver refrigerent solenoid			B_BatterySaver	.	
					B_EngineRun	.	
					B_TstModHvac	.	
					D_AmbTempLSB	.	
					D_AmbTempMSB	.	
					D_HvacModSig	.	
					I_AcPresHiSSe	A54.J2:8	
					I_AcPresLoSSe	A54.J2:9	
					I_BatMonMod47	A47.J1:24	
					I_BatMonMod54	A54.J1:24	
A47.J1:10	O_EntDorClsol	Entrance Door Close Solenoid Valve			I_EntDorClInSw	A56.J2:4	
					I_EntDorClOutSw	A47.J2:8	

MULTIPLEX OUTPUT LIST

Module.Pin#	Signal name	Ignition Key switch	Page	Connected devices	Input involved		
A47.J1:10	O_EntDorClsol	Entrance Door Close Solenoid Valve			I_EntDorClSe	A47.J1:21	
A47.J1:13	O_EntDorOpSol	Entrance Door Open Solenoid Valve			I_EntDorClInSw	A56.J2:4	
					I_EntDorClOutSw	A47.J2:8	
					I_EntDorClSe	A47.J1:21	
					I_EntDorOpSe	A47.J2:9	
					I_EntDorOpSw2	A47.J2:5	
					I_IntDorOpSw	A56.J2:3	
A47.J1:19	O_EntDorULkSo3				I_EntDorClSe	A47.J1:21	
					I_EntDorOpSw2	A47.J2:5	
					I_IgnKeySw	A36.JB:2	3.2
					I_IntDorOpSw	A56.J2:3	
A47.J1:3	O_DrvHeatSol	Driver Heat Solenoid			B_BatterySaver	.	
					B_EngineRun	.	
					B_TstModHvac	.	
					D_DriverSetPts	.	
					D_HvacModSig	.	
					D_HvacModSig1	.	
					I_BatMonMod47	A47.J1:24	
A47.J1:4	O_DrvRecTrap	Driver Recycle Trap			B_BatterySaver	.	
					B_EngineRun	.	
					B_TstModHvac	.	
					D_HvacModSig	.	
					I_EntDorClSe	A47.J1:21	
					I_EntDorOpSw2	A47.J2:5	
					I_IgnKeySw	A36.JB:2	3.2
					I_IntDorOpSw	A56.J2:3	
A47.J1:7	O_LwWipSpd1	Lower Wiper Speed 1			I_LwWipIntSw	A55.J2:10	
					I_LwWshSw	A55.J2:11	
A47.J2:1	O_DrvDefFanMo	Driver Defroster Fan Motor			B_BatterySaver	.	
					B_EngineRun	.	
					D_HvacModSig	.	
					I_BatMonMod47	A47.J1:24	
A47.J2:13	O_UpDefWtrPump	Upper Defrost Water Pump			B_BatterySaver	.	
					B_EngineRun	.	
					D_AmbTempLSB	.	
					D_AmbTempMSB	.	
					D_HvacModSig	.	
					I_BatMonMod47	A47.J1:24	
					I_UpperDefFanSw	A55.J2:8	
A47.J2:7	O_StepLight	Entrance Door Step Light Bulb			B_BatterySaver	.	
					B_EngineRun	.	
					B_TstModExtLight	.	
					I_EntDorClSe	A47.J1:21	

MULTIPLEX OUTPUT LIST

Module.Pin#	Signal name	Ignition Key switch	Page	Connected devices	Input involved		
A47.J2:7	O_StepLight	Entrance Door Step Light Bulb			I_EntDorOpSw2	A47.J2:5	
					I_FireExt2ndAlm	A36.JB:21	38.1
					I_HazardSw	A36.JB:4	26.1
					I_IgnKeySw	A36.JB:2	3.2
					I_IntDorOpSw	A56.J2:3	
					I_WCLDoorLtch	A57.J1:2	
					I_WCLFirstLatch	A57.J2:1	
					I_WCLLoDorSe	A57.J1:17	
					I_WclSw	A55.J2:7	
A48.J1:1	O_RHFogLb1	Right Hand Fog Light			B_BatterySaver	.	
					B_EngineRun	.	
					B_TstModExtLight	.	
					I_BatMonMod48	A48.J1:24	
					I_FogLightSw	A56.J2:5	
					I_HdLtHiLowBmSw	A56.J1:21	
					I_HiBeamCallSw	A56.J1:20	
A48.J1:10	O_RHFrMrkLb	Right Hand Front Markers Light Bulb			B_BatterySaver	.	
					B_EngineRun	.	
					B_TstModExtLight	.	
					I_FogLightSw	A56.J2:5	
					I_HdLtPos1Sw	A56.J1:17	
A48.J1:4	O_RHCornerLmpX3				B_BatterySaver	.	
					B_EngineRun	.	
					B_TstModExtLight	.	
					I_CorneringLtSw	A56.J2:6	
					I_IgnKeySw	A36.JB:2	3.2
					I_RHFlshSw	A48.J2:5	
A48.J1:7	O_RHFrFlshLb	Right Hand Front Flasher Light Bulb			B_BatterySaver	.	
					B_EngineRun	.	
					B_TstModExtLight	.	
					I_EntDorClSe	A47.J1:21	
					I_EntDorOpSw2	A47.J2:5	
					I_HazardSw	A36.JB:4	26.1
					I_IgnKeySw	A36.JB:2	3.2
					I_IntDorOpSw	A56.J2:3	
					I_LHFlshSwRrSig	A51.J1:20	
					I_RHFlshSw	A48.J2:5	
					I_RHFlshSwRrSig	A51.J2:5	
					I_WCLDoorLtch	A57.J1:2	
					I_WCLFirstLatch	A57.J2:1	
					I_WCLLoDorSe	A57.J1:17	
					I_WclSw	A55.J2:7	
A48.J2:1	O_RHHiBeamLb	Right Hand Hi Beam Light Bulb			B_BatterySaver	.	

MULTIPLEX OUTPUT LIST

Module.Pin#	Signal name	Ignition Key switch	Page	Connected devices	Input involved		
A48.J2:1	O_RHHiBeamLb	Right Hand Hi Beam Light Bulb			B_EngineRun	.	
					B_TstModExtLight	.	
					I_BatMonMod48	A48.J1:24	
					I_HdLtHiLowBmSw	A56.J1:21	
					I_HiBeamCallSw	A56.J1:20	
					I_ParkBrSe	A36.JB:9	12.1
A48.J2:13	O_RHFrSidFlshLb	RH Front Side Flasher L-Bulb			B_BatterySaver	.	
					B_EngineRun	.	
					B_TstModExtLight	.	
					I_EntDorClSe	A47.J1:21	
					I_EntDorOpSw2	A47.J2:5	
					I_HazardSw	A36.JB:4	26.1
					I_IgnKeySw	A36.JB:2	3.2
					I_IntDorOpSw	A56.J2:3	
					I_KneeLevelSe	A42.J2:1	
					I_KneeSw	A42.J1:5	
					I_LHFlshSwRrSig	A51.J1:20	
					I_RHFlshSw	A48.J2:5	
					I_RHFlshSwRrSig	A51.J2:5	
					I_WCLDoorLtch	A57.J1:2	
					I_WCLFirstLatch	A57.J2:1	
					I_WCLLoDorSe	A57.J1:17	
					I_WclSw	A55.J2:7	
A48.J2:4	O_RHLwBeamLb	Right Hand Low Beam Light Bulb			B_BatterySaver	.	
					B_EngineRun	.	
					B_TstModExtLight	.	
					I_BatMonMod48	A48.J1:24	
					I_EntDorClSe	A47.J1:21	
					I_EntDorOpSw2	A47.J2:5	
					I_FireExt2ndAlm	A36.JB:21	38.1
					I_HazardSw	A36.JB:4	26.1
					I_HdLtHiLowBmSw	A56.J1:21	
					I_IgnKeySw	A36.JB:2	3.2
					I_IntDorOpSw	A56.J2:3	
					I_WCLDoorLtch	A57.J1:2	
					I_WCLFirstLatch	A57.J2:1	
					I_WCLLoDorSe	A57.J1:17	
					I_WclSw	A55.J2:7	
A49.J1:1	O_FanDrvCool357				B_BatterySaver	.	
					B_EngineRun	.	
					B_TstModHvac	.	
					D_AmbTempLSB	.	
					D_AmbTempMSB	.	

MULTIPLEX OUTPUT LIST

Module.Pin#	Signal name	Ignition Key switch	Page	Connected devices	Input involved		
A49.J1:1	O_FanDrvCool357				I_AltSeLL	A52.J2:9	
					I_AltSeLR	A49.J1:20	
					I_AltSeUR	A52.J2:8	
					I_BatMonMod49	A49.J1:24	
					I_BatMonMod52	A52.J1:24	
					I_FireExt1stAl	A36.JB:23	38.1
					I_FireExt2ndAlm	A36.JB:21	38.1
					I_IgnKeySw	A36.JB:2	3.2
					I_RetdrSig	A50.J1:20	
A49.J1:3	O_FanDrvCac1				B_BatterySaver	.	
					B_EngineRun	.	
					B_TstModHvac	.	
					D_AmbTempLSB	.	
					D_AmbTempMSB	.	
					D_IndexByte	.	
					I_AltSeLL	A52.J2:9	
					I_AltSeLR	A49.J1:20	
					I_AltSeUR	A52.J2:8	
					I_BatMonMod49	A49.J1:24	
					I_BatMonMod52	A52.J1:24	
					I_FireExt1stAl	A36.JB:23	38.1
					I_FireExt2ndAlm	A36.JB:21	38.1
					I_IgnKeySw	A36.JB:2	3.2
A49.J2:1	O_AltChrCtrLR				B_BatterySaver	.	
					B_EngineRun	.	
					B_TstModExtLight	.	
					B_TstModHvac	.	
					D_AmbTempLSB	.	
					D_AmbTempMSB	.	
					D_HvacModSig2	.	
					D_IndexByte	.	
					I_AltSeLL	A52.J2:9	
					I_AltSeLR	A49.J1:20	
					I_AltSeUR	A52.J2:8	
					I_BatMonMod54	A54.J1:24	
					I_CadecCrankDis	A45.J2:5	
					I_EngDoorSe	A52.J2:6	
					I_EngStaRrSw	A52.J2:5	
					I_EntDorClSe	A47.J1:21	
					I_EntDorOpSw2	A47.J2:5	
					I_FireExt2ndAlm	A36.JB:21	38.1
					I_FrEngStaSw	A36.JB:22	3.2
					I_HazardSw	A36.JB:4	26.1

MULTIPLEX OUTPUT LIST

Module.Pin#	Signal name	Ignition Key switch	Page	Connected devices	Input involved		
A49.J2:1	O_AltChrCtrLR				I_IgnKeySw	A36.JB:2	3.2
					I_IntDorOpSw	A56.J2:3	
					I_ParkBrSe	A36.JB:9	12.1
					I_RetdrSig	A50.J1:20	
					I_StartEna1	A52.J1:20	
					I_StartEna2	A36.JB:1	3.2
					I_WCLDoorLtch	A57.J1:2	
					I_WCLFirstLatch	A57.J2:1	
					I_WCLLoDorSe	A57.J1:17	
					I_WclSw	A55.J2:7	
A49.J2:13	O_RetardEna	Retarder Enable			D_VipSteering1	.	
					D_VipSteering2	.	
					I_BrakePedSec	A36.JB:13	12.1
					I_IgnKeySw	A36.JB:2	3.2
					I_LowWiperCam	A47.J1:20	
					I_LwWipIntSw	A55.J2:10	
					I_LwWshSw	A55.J2:11	
					I_RetarderSel	A55.J2:6	
					I_RetdrSig	A50.J1:20	
A50.J1:10	O_ReClearLb	Rear Clearance Light Bulb			B_BatterySaver	.	
					B_EngineRun	.	
					B_TstModExtLight	.	
					I_FogLightSw	A56.J2:5	
					I_HdLtPos1Sw	A56.J1:17	
A50.J1:13	O_LHCtrFlshLb	Water Filter Indicator Warning			B_BatterySaver	.	
					B_EngineRun	.	
					B_TstModExtLight	.	
					I_EntDorClSe	A47.J1:21	
					I_EntDorOpSw2	A47.J2:5	
					I_HazardSw	A36.JB:4	26.1
					I_IgnKeySw	A36.JB:2	3.2
					I_IntDorOpSw	A56.J2:3	
					I_LHFlshSwRrSig	A51.J1:20	
					I_RHFlshSwRrSig	A51.J2:5	
					I_WCLDoorLtch	A57.J1:2	
					I_WCLFirstLatch	A57.J2:1	
					I_WCLLoDorSe	A57.J1:17	
					I_WclSw	A55.J2:7	
A50.J1:19	O_RHCtrFlshLb	Wheel Chair Lift Warning Indicator			B_BatterySaver	.	
					B_EngineRun	.	
					B_TstModExtLight	.	
					I_EntDorClSe	A47.J1:21	
					I_EntDorOpSw2	A47.J2:5	

MULTIPLEX OUTPUT LIST

Module.Pin#	Signal name	Ignition Key switch	Page	Connected devices	Input involved		
A50.J1:19	O_RHCtrFlshLb	Wheel Chair Lift Warning Indicator			I_HazardSw	A36.JB:4	26.1
					I_IgnKeySw	A36.JB:2	3.2
					I_IntDorOpSw	A56.J2:3	
					I_LHFlshSwRrSig	A51.J1:20	
					I_RHFlshSwRrSig	A51.J2:5	
					I_WCLDoorLtch	A57.J1:2	
					I_WCLFirstLatch	A57.J2:1	
					I_WCLLoDorSe	A57.J1:17	
					I_WclSw	A55.J2:7	
A50.J1:7	O_RevAlarm	Back up alarm			B_BatterySaver	.	
					B_EngineRun	.	
					B_TestSwBuz2	.	
					B_TestSwBuzzer	.	
					B_TstModExtLight	.	
					B_TstModHvac	.	
					B_TstModHvacNext	.	
					B_TstSwBuz3	.	
					D_NextWheel	.	
A50.J2:1	O_BrLTLowerLed				B_BatterySaver	.	
					B_EngineRun	.	
					B_TstModExtLight	.	
					I_BrakePedPri	A51.J1:21	
					I_BrakePedSec	A36.JB:13	12.1
					I_IgnKeySw	A36.JB:2	3.2
					I_ParkBrSe	A36.JB:9	12.1
					I_RetdrSig	A50.J1:20	
A50.J2:10	O_BackUpLt				B_BatterySaver	.	
					B_EngineRun	.	
					B_TestSwBuz2	.	
					B_TestSwBuzzer	.	
					B_TstModExtLight	.	
					B_TstModHvac	.	
					B_TstModHvacNext	.	
					B_TstSwBuz3	.	
					D_NextWheel	.	
A50.J2:7	O_CtrSdMrkLb	Tag Axle Warning Indicator			B_BatterySaver	.	
					B_EngineRun	.	
					B_TstModExtLight	.	
					I_FogLightSw	A56.J2:5	
					I_HdLtPos1Sw	A56.J1:17	
A51.J1:1	O_LHDockLb	Left Hand Docking Light Bulb			B_BatterySaver	.	
					B_EngineRun	.	
					B_TstModExtLight	.	

MULTIPLEX OUTPUT LIST

Module.Pin#	Signal name	Ignition Key switch	Page	Connected devices	Input involved		
A51.J1:1	O_LHDockLb	Left Hand Docking Light Bulb			I_DockingLtSw	A56.J2:10	
A51.J1:13	O_LHReFlshLb	Left Hand Rear Flasher Light Bulb			B_BatterySaver	.	
					B_EngineRun	.	
					B_TstModExtLight	.	
					I_EntDorClSe	A47.J1:21	
					I_EntDorOpSw2	A47.J2:5	
					I_HazardSw	A36.JB:4	26.1
					I_IgnKeySw	A36.JB:2	3.2
					I_IntDorOpSw	A56.J2:3	
					I_LHFlshSwRrSig	A51.J1:20	
					I_RHFlshSwRrSig	A51.J2:5	
					I_WCLDoorLtch	A57.J1:2	
					I_WCLFirstLatch	A57.J2:1	
					I_WCLLoDorSe	A57.J1:17	
					I_WclSw	A55.J2:7	
A51.J1:16	O_SerBrkTrans	Servise Brake Signal For Transmission			I_BrakePedSec	A36.JB:13	12.1
A51.J1:19	O_WCLSDoorLb				I_ParkBrSe	A36.JB:9	12.1
					I_WCLDoorLtch	A57.J1:2	
					I_WCLFirstLatch	A57.J2:1	
A51.J1:3	O_RHDockLb	Right Hand Docking Light Bulb			B_BatterySaver	.	
					B_EngineRun	.	
					B_TstModExtLight	.	
					I_DockingLtSw	A56.J2:10	
					I_RHFlshSw	A48.J2:5	
A51.J1:4	O_RHReFlshLb	Right Hand Rear Flasher Light Bulb			B_BatterySaver	.	
					B_EngineRun	.	
					B_TstModExtLight	.	
					I_EntDorClSe	A47.J1:21	
					I_EntDorOpSw2	A47.J2:5	
					I_HazardSw	A36.JB:4	26.1
					I_IgnKeySw	A36.JB:2	3.2
					I_IntDorOpSw	A56.J2:3	
					I_LHFlshSwRrSig	A51.J1:20	
					I_RHFlshSwRrSig	A51.J2:5	
					I_WCLDoorLtch	A57.J1:2	
					I_WCLFirstLatch	A57.J2:1	
					I_WCLLoDorSe	A57.J1:17	
					I_WclSw	A55.J2:7	
A51.J1:7	O_CyclopeLt	Cyclope Brake Light			B_BatterySaver	.	
					B_EngineRun	.	
					B_TstModExtLight	.	
					I_BrakePedPri	A51.J1:21	
					I_BrakePedSec	A36.JB:13	12.1

MULTIPLEX OUTPUT LIST

Module.Pin#	Signal name	Ignition Key switch	Page	Connected devices	Input involved		
A51.J1:7	O_CyclopeLt	Cyclope Brake Light			I_IgnKeySw	A36.JB:2	3.2
					I_ParkBrSe	A36.JB:9	12.1
A51.J2:1	O_CyclopeRH				B_BatterySaver	.	
					B_EngineRun	.	
					B_TstModExtLight	.	
					I_EntDorClSe	A47.J1:21	
					I_EntDorOpSw2	A47.J2:5	
					I_FogLightSw	A56.J2:5	
					I_HazardSw	A36.JB:4	26.1
					I_HdLtPos1Sw	A56.J1:17	
					I_IgnKeySw	A36.JB:2	3.2
					I_IntDorOpSw	A56.J2:3	
					I_LHFlshSwRrSig	A51.J1:20	
					I_RHFlshSwRrSig	A51.J2:5	
					I_WCLDoorLtch	A57.J1:2	
					I_WCLFirstLatch	A57.J2:1	
					I_WCLLoDorSe	A57.J1:17	
					I_WclSw	A55.J2:7	
A51.J2:10	O_CyclopeLH				B_BatterySaver	.	
					B_EngineRun	.	
					B_TstModExtLight	.	
					I_EntDorClSe	A47.J1:21	
					I_EntDorOpSw2	A47.J2:5	
					I_FogLightSw	A56.J2:5	
					I_HazardSw	A36.JB:4	26.1
					I_HdLtPos1Sw	A56.J1:17	
					I_IgnKeySw	A36.JB:2	3.2
					I_IntDorOpSw	A56.J2:3	
					I_LHFlshSwRrSig	A51.J1:20	
					I_RHFlshSwRrSig	A51.J2:5	
					I_WCLDoorLtch	A57.J1:2	
					I_WCLFirstLatch	A57.J2:1	
					I_WCLLoDorSe	A57.J1:17	
					I_WclSw	A55.J2:7	
A51.J2:4	O_TransInhibit	Transmission Inhibit			I_BrakePedPri	A51.J1:21	
					I_BrakePedSec	A36.JB:13	12.1
					I_ParkBrSe	A36.JB:9	12.1
					I_WCLDoorLtch	A57.J1:2	
					I_WCLFirstLatch	A57.J2:1	
					I_WCLLoDorSe	A57.J1:17	
					I_WclSw	A55.J2:7	
A51.J2:7	O_BrLTUpperLed				B_BatterySaver	.	
					B_EngineRun	.	

MULTIPLEX OUTPUT LIST

Module.Pin#	Signal name	Ignition Key switch	Page	Connected devices	Input involved		
A51.J2:7	O_BrLTUpperLed				B_TstModExtLight	.	
					I_BrakePedPri	A51.J1:21	
					I_BrakePedSec	A36.JB:13	12.1
					I_IgnKeySw	A36.JB:2	3.2
					I_ParkBrSe	A36.JB:9	12.1
					I_RetdrSig	A50.J1:20	
A52.J1:1	O_FnDrvCac2				B_BatterySaver	.	
					B_EngineRun	.	
					B_TstModHvac	.	
					D_AmbTempLSB	.	
					D_AmbTempMSB	.	
					D_IndexByte	.	
					I_AltSeLL	A52.J2:9	
					I_AltSeUR	A52.J2:8	
					I_BatMonMod52	A52.J1:24	
					I_FireExt1stAl	A36.JB:23	38.1
					I_FireExt2ndAlm	A36.JB:21	38.1
					I_IgnKeySw	A36.JB:2	3.2
A52.J1:10	O_StarterRel	Starter Relay			B_BatterySaver	.	
					B_EngineRun	.	
					B_TstModExtLight	.	
					B_TstModHvac	.	
					I_CadecCrankDis	A45.J2:5	
					I_EngDoorSe	A52.J2:6	
					I_EngStaRrSw	A52.J2:5	
					I_EntDorClSe	A47.J1:21	
					I_EntDorOpSw2	A47.J2:5	
					I_FireExt2ndAlm	A36.JB:21	38.1
					I_FrEngStaSw	A36.JB:22	3.2
					I_HazardSw	A36.JB:4	26.1
					I_IgnKeySw	A36.JB:2	3.2
					I_IntDorOpSw	A56.J2:3	
					I_StartEna1	A52.J1:20	
					I_StartEna2	A36.JB:1	3.2
					I_WCLDoorLtch	A57.J1:2	
					I_WCLFirstLatch	A57.J2:1	
					I_WCLLoDorSe	A57.J1:17	
					I_WclSw	A55.J2:7	
A52.J1:3	O_FanDrvCool468				B_BatterySaver	.	
					B_EngineRun	.	
					B_TstModHvac	.	
					D_AmbTempLSB	.	
					D_AmbTempMSB	.	

MULTIPLEX OUTPUT LIST

Module.Pin#	Signal name	Ignition Key switch	Page	Connected devices	Input involved		
A52.J1:3	O_FanDrvCool468				I_AltSeLL	A52.J2:9	
					I_AltSeUR	A52.J2:8	
					I_BatMonMod52	A52.J1:24	
					I_FireExt1stAl	A36.JB:23	38.1
					I_FireExt2ndAlm	A36.JB:21	38.1
					I_IgnKeySw	A36.JB:2	3.2
					I_RetdrSig	A50.J1:20	
A52.J1:4	O_LavFanMo	Lavatory Fan Motor			B_BatterySaver	.	
					B_EngineRun	.	
					B_TstModHvac	.	
					I_BatMonMod52	A52.J1:24	
A52.J1:7	O_EngCmptLb	Engine Compartiment Light Bulb			B_BatterySaver	.	
					B_EngineRun	.	
					B_TstModExtLight	.	
					I_EngDoorSe	A52.J2:6	
					I_EntDorClSe	A47.J1:21	
					I_EntDorOpSw2	A47.J2:5	
					I_FireExt2ndAlm	A36.JB:21	38.1
					I_HazardSw	A36.JB:4	26.1
					I_IgnKeySw	A36.JB:2	3.2
					I_IntDorOpSw	A56.J2:3	
					I_WCLDoorLtch	A57.J1:2	
					I_WCLFirstLatch	A57.J2:1	
					I_WCLLoDorSe	A57.J1:17	
					I_WclSw	A55.J2:7	
A52.J2:1	O_AltChrCtrUR				B_BatterySaver	.	
					B_EngineRun	.	
					B_TstModExtLight	.	
					B_TstModHvac	.	
					D_AmbTempLSB	.	
					D_AmbTempMSB	.	
					D_HvacModSig2	.	
					D_IndexByte	.	
					I_AltSeLL	A52.J2:9	
					I_AltSeLR	A49.J1:20	
					I_AltSeUR	A52.J2:8	
					I_BatMonMod54	A54.J1:24	
					I_CadecCrankDis	A45.J2:5	
					I_EngDoorSe	A52.J2:6	
					I_EngStaRrSw	A52.J2:5	
					I_EntDorClSe	A47.J1:21	
					I_EntDorOpSw2	A47.J2:5	
					I_FireExt2ndAlm	A36.JB:21	38.1

MULTIPLEX OUTPUT LIST

Module.Pin#	Signal name	Ignition Key switch	Page	Connected devices	Input involved		
A52.J2:1	O_AltChrCtrUR				I_FrEngStaSw	A36.JB:22	3.2
					I_HazardSw	A36.JB:4	26.1
					I_IgnKeySw	A36.JB:2	3.2
					I_IntDorOpSw	A56.J2:3	
					I_ParkBrSe	A36.JB:9	12.1
					I_RetdrSig	A50.J1:20	
					I_StartEna1	A52.J1:20	
					I_StartEna2	A36.JB:1	3.2
					I_WCLDoorLtch	A57.J1:2	
					I_WCLFirstLatch	A57.J2:1	
					I_WCLLoDorSe	A57.J1:17	
					I_WclSw	A55.J2:7	
A52.J2:4	O_AltChrCtrLL				B_BatterySaver	.	
					B_EngineRun	.	
					B_TstModExtLight	.	
					B_TstModHvac	.	
					D_AmbTempLSB	.	
					D_AmbTempMSB	.	
					D_HvacModSig2	.	
					D_IndexByte	.	
					I_AltSeLL	A52.J2:9	
					I_AltSeLR	A49.J1:20	
					I_AltSeUR	A52.J2:8	
					I_BatMonMod54	A54.J1:24	
					I_CadecCrankDis	A45.J2:5	
					I_EngDoorSe	A52.J2:6	
					I_EngStaRrSw	A52.J2:5	
					I_EntDorClSe	A47.J1:21	
					I_EntDorOpSw2	A47.J2:5	
					I_FireExt2ndAlm	A36.JB:21	38.1
					I_FrEngStaSw	A36.JB:22	3.2
					I_HazardSw	A36.JB:4	26.1
					I_IgnKeySw	A36.JB:2	3.2
					I_IntDorOpSw	A56.J2:3	
					I_ParkBrSe	A36.JB:9	12.1
					I_RetdrSig	A50.J1:20	
					I_StartEna1	A52.J1:20	
					I_StartEna2	A36.JB:1	3.2
					I_WCLDoorLtch	A57.J1:2	
					I_WCLFirstLatch	A57.J2:1	
					I_WCLLoDorSe	A57.J1:17	
					I_WclSw	A55.J2:7	
A53.J1:10	O_CurbLightsRH				B_BatterySaver	.	

MULTIPLEX OUTPUT LIST

Module.Pin#	Signal name	Ignition Key switch	Page	Connected devices	Input involved		
A53.J1:10	O_CurbLightsRH				B_EngineRun	.	
					B_TstModExtLight	.	
					I_CorneringLtSw	A56.J2:6	
					I_EntDorClSe	A47.J1:21	
					I_EntDorOpSw2	A47.J2:5	
					I_HdLtPos1Sw	A56.J1:17	
					I_IgnKeySw	A36.JB:2	3.2
					I_IntDorOpSw	A56.J2:3	
					I_ParkBrSe	A36.JB:9	12.1
					I_RHFlshSw	A48.J2:5	
A53.J1:13	O_FlushPmpMo	Right Hand Flasher Indicator			B_BatterySaver	.	
					B_EngineRun	.	
					B_TstModExtLight	.	
					I_EntDorClSe	A47.J1:21	
					I_EntDorOpSw2	A47.J2:5	
					I_FireExt2ndAlm	A36.JB:21	38.1
					I_HazardSw	A36.JB:4	26.1
					I_IgnKeySw	A36.JB:2	3.2
					I_IntDorOpSw	A56.J2:3	
					I_LavFlshSw	A53.J1:20	
					I_WCLDoorLtch	A57.J1:2	
					I_WCLFirstLatch	A57.J2:1	
					I_WCLLoDorSe	A57.J1:17	
					I_WclSw	A55.J2:7	
A53.J1:4	O_LavOccRearLb	Lavatory Occupied Rear Light Bulb			B_BatterySaver	.	
					B_EngineRun	.	
					B_TstModExtLight	.	
					I_EntDorClSe	A47.J1:21	
					I_EntDorOpSw2	A47.J2:5	
					I_FireExt2ndAlm	A36.JB:21	38.1
					I_HazardSw	A36.JB:4	26.1
					I_IgnKeySw	A36.JB:2	3.2
					I_IntDorOpSw	A56.J2:3	
					I_LavDorLockSe	A53.J2:5	
					I_LavEmrgSw	A53.J1:21	
					I_WCLDoorLtch	A57.J1:2	
					I_WCLFirstLatch	A57.J2:1	
					I_WCLLoDorSe	A57.J1:17	
					I_WclSw	A55.J2:7	
A53.J1:7	O_CurbLightsLH				B_BatterySaver	.	
					B_EngineRun	.	
					B_TstModExtLight	.	
					I_CorneringLtSw	A56.J2:6	

MULTIPLEX OUTPUT LIST

Module.Pin#	Signal name	Ignition Key switch	Page	Connected devices	Input involved		
A53.J1:7	O_CurbLightsLH				I_EntDorClSe	A47.J1:21	
					I_EntDorOpSw2	A47.J2:5	
					I_HdLtPos1Sw	A56.J1:17	
					I_IgnKeySw	A36.JB:2	3.2
					I_IntDorOpSw	A56.J2:3	
					I_LHFlshSw	A46.J1:20	
					I_ParkBrSe	A36.JB:9	12.1
A53.J2:1	O_IndirLed	Indirect Led			B_BatterySaver	.	
					B_EngineRun	.	
					B_TstModExtLight	.	
					I_EntDorClSe	A47.J1:21	
					I_EntDorOpSw2	A47.J2:5	
					I_FireExt2ndAlm	A36.JB:21	38.1
					I_HazardSw	A36.JB:4	26.1
					I_IgnKeySw	A36.JB:2	3.2
					I_InDirLtsSw	A55.J2:3	
					I_IntDorOpSw	A56.J2:3	
					I_WCLDoorLtch	A57.J1:2	
					I_WCLFirstLatch	A57.J2:1	
					I_WCLLoDorSe	A57.J1:17	
					I_WclSw	A55.J2:7	
A53.J2:10	O_ReadLtsLedNeg				I_IgnKeySw	A36.JB:2	3.2
					I_InDirLtsSw	A55.J2:3	
					I_ParkBrSe	A36.JB:9	12.1
					I_ReadDockSw	A55.J2:5	
A53.J2:13	O_EmergencyLt	Emergency Lights			B_BatterySaver	.	
					B_EngineRun	.	
					B_TstModExtLight	.	
					I_EntDorClSe	A47.J1:21	
					I_EntDorOpSw2	A47.J2:5	
					I_FireExt2ndAlm	A36.JB:21	38.1
					I_HazardSw	A36.JB:4	26.1
					I_HdLtPos1Sw	A56.J1:17	
					I_IgnKeySw	A36.JB:2	3.2
					I_IntDorOpSw	A56.J2:3	
					I_WCLDoorLtch	A57.J1:2	
					I_WCLFirstLatch	A57.J2:1	
					I_WCLLoDorSe	A57.J1:17	
					I_WclSw	A55.J2:7	
A53.J2:4	O_ReadLtsPwm				I_AccKeySw	A36.JB:6	3.2
					I_IgnKeySw	A36.JB:2	3.2
					I_InDirLtsSw	A55.J2:3	
					I_ParkBrSe	A36.JB:9	12.1

MULTIPLEX OUTPUT LIST

Module.Pin#	Signal name	Ignition Key switch	Page	Connected devices	Input involved		
A53.J2:4	O_ReadLtsPwm				I_ReadDockSw	A55.J2:5	
					I_ReadLtsSw	A55.J2:4	
A53.J2:7	O_LavRoofLb				B_BatterySaver	.	
					B_EngineRun	.	
					B_TstModExtLight	.	
					I_EntDorClSe	A47.J1:21	
					I_EntDorOpSw2	A47.J2:5	
					I_FireExt2ndAlm	A36.JB:21	38.1
					I_HazardSw	A36.JB:4	26.1
					I_IgnKeySw	A36.JB:2	3.2
					I_IntDorOpSw	A56.J2:3	
					I_LavDorLockSe	A53.J2:5	
					I_LavEmrgSw	A53.J1:21	
					I_WCLDoorLtch	A57.J1:2	
					I_WCLFirstLatch	A57.J2:1	
					I_WCLLoDorSe	A57.J1:17	
					I_WclSw	A55.J2:7	
A54.J1:1	O_EvaSpd2Pilot	Evaporator Fan Speed 2			B_BatterySaver	.	
					B_EngineRun	.	
					B_LowVoltage	.	
					B_TstModHvac	.	
					D_AmbTempLSB	.	
					D_AmbTempMSB	.	
					D_HvacModSig	.	
					D_PassSetPts	.	
					I_BatMonMod54	A54.J1:24	
					I_FireExt1stAl	A36.JB:23	38.1
					I_FireExt2ndAlm	A36.JB:21	38.1
					I_FireSensorA36	A36.JB:5	38.1
					I_IgnKeySw	A36.JB:2	3.2
					I_WebFireComp	A36.JB:14	
A54.J1:10	O_ACWaterPmp	Hvac Water Pump			B_BatterySaver	.	
					B_EngineRun	.	
					B_TstModHvac	.	
					D_AmbTempLSB	.	
					D_AmbTempMSB	.	
					D_HvacModSig	.	
					I_BatMonMod54	A54.J1:24	
					I_FireExt1stAl	A36.JB:23	38.1
					I_FireExt2ndAlm	A36.JB:21	38.1
					I_FireSensorA36	A36.JB:5	38.1
					I_IgnKeySw	A36.JB:2	3.2
					I_WebFireComp	A36.JB:14	

MULTIPLEX OUTPUT LIST

Module.Pin#	Signal name	Ignition Key switch	Page	Connected devices	Input involved		
A54.J1:16	O_AcCluSol	Hvac AC Clutch Solenoid			B_BatterySaver	.	
					B_EngineRun	.	
					B_TstModHvac	.	
					I_AcPresHiSSe	A54.J2:8	
					I_AcPresLoSSe	A54.J2:9	
A54.J1:19	O_EvaSpd1Rel	Evaporator Fan Speed 1 Relay			B_BatterySaver	.	
					B_EngineRun	.	
					B_LowVoltage	.	
					B_TstModHvac	.	
					D_HvacModSig	.	
					I_BatMonMod54	A54.J1:24	
					I_FireExt1stAl	A36.JB:23	38.1
					I_FireExt2ndAlm	A36.JB:21	38.1
					I_FireSensorA36	A36.JB:5	38.1
					I_IgnKeySw	A36.JB:2	3.2
					I_WebFireComp	A36.JB:14	
A54.J1:3	O_CondSpdVariabl				B_BatterySaver	.	
					B_EngineRun	.	
					B_TstModHvac	.	
					I_AcPresHiSSe	A54.J2:8	
					I_BatMonMod54	A54.J1:24	
					I_FireExt1stAl	A36.JB:23	38.1
A54.J1:4	O_EngRunPreHeat				B_EngineRun	.	
					I_BatMonMod54	A54.J1:24	
A54.J1:7	O_PasRfgSol	Passenger Refrigerent Solenoid			B_BatterySaver	.	
					B_EngineRun	.	
					B_LowVoltage	.	
					B_TstModHvac	.	
					D_AmbTempLSB	.	
					D_AmbTempMSB	.	
					D_HvacModSig	.	
					D_PassSetPts	.	
					I_BatMonMod54	A54.J1:24	
					I_FireExt1stAl	A36.JB:23	38.1
					I_FireExt2ndAlm	A36.JB:21	38.1
					I_FireSensorA36	A36.JB:5	38.1
					I_IgnKeySw	A36.JB:2	3.2
					I_WebFireComp	A36.JB:14	
A54.J2:1	O_PRakRfgSol	Parcel Rack Refrigerent Solenoid			B_BatterySaver	.	
					B_EngineRun	.	
					B_LowVoltage	.	
					B_TstModHvac	.	
					D_AmbTempLSB	.	

MULTIPLEX OUTPUT LIST

Module.Pin#	Signal name	Ignition Key switch	Page	Connected devices	Input involved		
A54.J2:1	O_PRakRfgSol	Parcel Rack Refrigerent Solenoid			D_AmbTempMSB	.	
					D_HvacModSig	.	
					D_PassSetPts	.	
					I_FireExt1stAl	A36.JB:23	38.1
					I_FireExt2ndAlm	A36.JB:21	38.1
					I_FireSensorA36	A36.JB:5	38.1
					I_IgnKeySw	A36.JB:2	3.2
					I_PRackFanSw	A55.J2:9	
					I_WebFireComp	A36.JB:14	
A54.J2:10	O_ACRecPass	A/C Pass. Gaz Cylinder Recycle			B_BatterySaver	.	
					B_EngineRun	.	
					B_TstModHvac	.	
					D_HvacModSig	.	
					I_EntDorClSe	A47.J1:21	
					I_EntDorOpSw2	A47.J2:5	
					I_IgnKeySw	A36.JB:2	3.2
					I_IntDorOpSw	A56.J2:3	
A54.J2:13	O_PassHeatVlvCtl				B_BatterySaver	.	
					B_EngineRun	.	
					B_TstModHvac	.	
					I_BatMonMod54	A54.J1:24	
A54.J2:4	O_AcUnldRH	Hvac Right Hand Cylinder Unloader			B_BatterySaver	.	
					B_EngineRun	.	
					B_TstModHvac	.	
					D_AmbTempLSB	.	
					D_AmbTempMSB	.	
					D_PassSetPts	.	
					I_AcPresHiSSe	A54.J2:8	
					I_AcPresLoSSe	A54.J2:9	
A54.J2:7	O_PasHeatSol	Passenger Heat Solenoid Valve			B_BatterySaver	.	
					B_EngineRun	.	
					B_TstModHvac	.	
					D_AmbTempLSB	.	
					D_AmbTempMSB	.	
					D_HvacModSig	.	
					D_PassSetPts	.	
					I_BatMonMod54	A54.J1:24	
					I_FireExt1stAl	A36.JB:23	38.1
					I_FireExt2ndAlm	A36.JB:21	38.1
					I_FireSensorA36	A36.JB:5	38.1
					I_IgnKeySw	A36.JB:2	3.2
					I_WebFireComp	A36.JB:14	
A55.J1:1	O_DashBackLit	Dash BackLighting			I_HdLtPos1Sw	A56.J1:17	

MULTIPLEX OUTPUT LIST

Module.Pin#	Signal name	Ignition Key switch	Page	Connected devices	Input involved		
A55.J1:4	O_Alt	Alternator			B_BatterySaver	.	
					B_EngineRun	.	
					B_TstModExtLight	.	
					B_TstModHvac	.	
					D_AmbTempLSB	.	
					D_AmbTempMSB	.	
					D_HvacModSig2	.	
					D_IndexByte	.	
					I_AltSeLL	A52.J2:9	
					I_AltSeLR	A49.J1:20	
					I_AltSeUR	A52.J2:8	
					I_BatMonMod54	A54.J1:24	
					I_CadecCrankDis	A45.J2:5	
					I_EngDoorSe	A52.J2:6	
					I_EngStaRrSw	A52.J2:5	
					I_EntDorClSe	A47.J1:21	
					I_EntDorOpSw2	A47.J2:5	
					I_FireExt2ndAlm	A36.JB:21	38.1
					I_FrEngStaSw	A36.JB:22	3.2
					I_HazardSw	A36.JB:4	26.1
					I_IgnKeySw	A36.JB:2	3.2
					I_IntDorOpSw	A56.J2:3	
					I_ParkBrSe	A36.JB:9	12.1
					I_RetdrSig	A50.J1:20	
					I_StartEna1	A52.J1:20	
					I_StartEna2	A36.JB:1	3.2
					I_WCLDoorLtch	A57.J1:2	
					I_WCLFirstLatch	A57.J2:1	
					I_WCLLoDorSe	A57.J1:17	
					I_WclSw	A55.J2:7	
A55.J2:15	O_GateWayPwr				D_VipSteering1	.	
					I_A55_NormalMode	.	
					I_IgnKeySw	A36.JB:2	3.2
A56.J1:10	O_ClusterDown				D_VipSteering1	.	
					D_VipSteering3	.	
					I_A56NormalMode	.	
					I_HiBeamCallSw	A56.J1:20	
					I_IgnKeySw	A36.JB:2	3.2
					I_LHFlshSwLHom	A56.J2:12	
					I_RHFlshSwLHom	A56.J2:13	
A56.J1:13	O_EngineRun	Engine Run Signal			B_EngineRun	.	
					D_HvacModSig	.	
					I_BatMonMod53	A53.J1:24	

MULTIPLEX OUTPUT LIST

Module.Pin#	Signal name	Ignition Key switch	Page	Connected devices	Input involved		
A56.J1:13	O_EngineRun	Engine Run Signal			I_BatMonMod54	A54.J1:24	
					I_IgnKeySw	A36.JB:2	3.2
A56.J1:3	O_ClusterSelect				D_VipSteering1	.	
					D_VipSteering2	.	
					I_A56NormalMode	.	
					I_HiBeamCallSw	A56.J1:20	
					I_IgnKeySw	A36.JB:2	3.2
					I_LHFlshSwLHom	A56.J2:12	
					I_RHFlshSwLHom	A56.J2:13	
A56.J1:4	O_ClusterEsc				D_VipSteering1	.	
					D_VipSteering3	.	
					I_A56NormalMode	.	
					I_HiBeamCallSw	A56.J1:20	
					I_IgnKeySw	A36.JB:2	3.2
					I_LHFlshSwLHom	A56.J2:12	
					I_RHFlshSwLHom	A56.J2:13	
A56.J1:7	O_ClusterUp				D_VipSteering1	.	
					D_VipSteering3	.	
					I_A56NormalMode	.	
					I_HiBeamCallSw	A56.J1:20	
					I_IgnKeySw	A36.JB:2	3.2
					I_LHFlshSwLHom	A56.J2:12	
					I_RHFlshSwLHom	A56.J2:13	
A57.J1:1	O_WCLOn	Wheel Chair Lift Enabled			I_ParkBrSe	A36.JB:9	12.1
					I_WclSw	A55.J2:7	
A57.J1:19	O_WCLSePwr				I_IgnKeySw	A36.JB:2	3.2
A57.J1:3	O_WCLUpDoorSig	WCL Upper Door Open Signal For TWU			I_ParkBrSe	A36.JB:9	12.1
					I_WCLDoorLtch	A57.J1:2	
					I_WCLFirstLatch	A57.J2:1	

MULTIPLEX INTPUT LIST

Module.Pin#	Signal name	Ignition Key switch	Page	Connected devices
.	I_A41_NormalMode			
.	I_A43_NormalMode			
.	I_A44_NormalMode			
.	I_A55_NormalMode			
.	I_A56NormalMode			
A36.JB:1	I_StartEna2		3.2	
A36.JB:13	I_BrakePedSec		12.1	
A36.JB:14	I_WebFireComp			
A36.JB:2	I_IgnKeySw	Ignition Key switch	3.2	
A36.JB:21	I_FireExt2ndAlm		38.1	
A36.JB:22	I_FrEngStaSw	Front Engine Start Switch	3.2	
A36.JB:23	I_FireExt1stAl		38.1	
A36.JB:4	I_HazardSw	Hazard Switch	26.1	
A36.JB:5	I_FireSensorA36	Fire Sensor On A36	38.1	
A36.JB:6	I_AccKeySw	Accessories Key switch	3.2	
A36.JB:9	I_ParkBrSe	Paking Brake Sensor	12.1	
A41.J2:11	I_FrSrvCptOpenSe			
A41.J2:4	I_LuggDrOpenSe	Luggages doors open sensor		
A42.J1:5	I_KneeSw			
A42.J2:1	I_KneeLevelSe			
A43.J2:5	I_LuggDrLkSe			
A44.J2:5	I_SunVisorDrv	sun visor drv sw		
A44.J2:6	I_SunVisorPass	sun visor pass sw		
A45.J1:21	I_CadecEngShtDw	Cadec Engine ShutDown		
A45.J2:5	I_CadecCrankDis	Cadec Crank Disable		
A46.J1:20	I_LHFlshSw	Left Hand Flasher Switch		
A46.J1:24	I_BatMonMod46			
A47.J1:20	I_LowWiperCam	Low wiper Cam		
A47.J1:21	I_EntDorClSe	Entrance Door Close Sensor		
A47.J1:24	I_BatMonMod47			
A47.J2:5	I_EntDorOpSw2			
A47.J2:8	I_EntDorClOutSw	Entrance Door Close Outside Switch		
A47.J2:9	I_EntDorOpSe	Entrance Door Open Sensor		
A48.J1:24	I_BatMonMod48			
A48.J2:5	I_RHFlshSw	Right Hand Flasher Switch		
A49.J1:20	I_AltSeLR			
A49.J1:24	I_BatMonMod49			
A49.J2:8	I_RJBLtSw	Rear Junction Light Switch		
A50.J1:20	I_RetdrSig	Retarder Signal		
A51.J1:20	I_LHFlshSwRrSig	LH FlasherSwitch Rear Signal		
A51.J1:21	I_BrakePedPri			
A51.J2:5	I_RHFlshSwRrSig	RH FlasherSwitch Rear Signal		
A52.J1:20	I_StartEna1			

MULTIPLEX INTPUT LIST

Module.Pin#	Signal name	Ignition Key switch	Page	Connected devices
A52.J1:24	I_BatMonMod52			
A52.J2:5	I_EngStaRrSw	Engine Start Rear Switch		
A52.J2:6	I_EngDoorSe	Engine Door Sensor		
A52.J2:8	I_AltSeUR			
A52.J2:9	I_AltSeLL			
A53.J1:20	I_LavFlshSw	Lavatory Flushing Switch		
A53.J1:21	I_LavEmrgSw	Lavatory Emergency Switch		
A53.J1:24	I_BatMonMod53			
A53.J2:5	I_LavDorLockSe			
A54.J1:20	I_AcDorOpSe	Condensor Door Open Switch		
A54.J1:24	I_BatMonMod54			
A54.J2:8	I_AcPresHiSSe	Ac Pressure High Side Sensor		
A54.J2:9	I_AcPresLoSSe	Ac Pressure Low Side Sensor		
A55.J2:1	I_DrvLtSw	Driver Light Switch		
A55.J2:10	I_LwWipIntSw	Lower Wiper Intermitant Switch		
A55.J2:11	I_LwWshSw	Lower Wiper Washer Switch		
A55.J2:12	I_UpWipSw	Upper Wiper Switch		
A55.J2:13	I_UpWshSw	Upper Washer Wiper Switch		
A55.J2:3	I_InDirLtsSw	Passenger Indirect lightning Switch		
A55.J2:4	I_ReadLtsSw	Passenger Reading lights Switch		
A55.J2:5	I_ReadDockSw			
A55.J2:6	I_RetarderSel	Retarder Selected		
A55.J2:7	I_WclSw	Wheel Chair Lift Dash Switch		
A55.J2:8	I_UpperDefFanSw	Upper Defrost Dash Switch		
A55.J2:9	I_PRackFanSw	Parcel Rack Fan Switch		
A56.J1:17	I_HdLtPos1Sw	Head Light Switch Position Markers		
A56.J1:2	I_HeadLmpWshSw			
A56.J1:20	I_HiBeamCallSw	Hi/Low Beam Switch		
A56.J1:21	I_HdLtHiLowBmSw	Head Lights High and Low Beam Switch		
A56.J2:1	I_WdoOpenSe	Passenger Window Open Sensor		
A56.J2:10	I_DockingLtSw	Docking Lights Switch		
A56.J2:12	I_LHFlshSwLHom			
A56.J2:13	I_RHFlshSwLHom			
A56.J2:2	I_UpWipIntSw	Upper Wiper Intermitant Switch		
A56.J2:3	I_IntDorOpSw	Entrance Door Open Switch		
A56.J2:4	I_EntDorClInSw	Entrance Door Close Inside Switch		
A56.J2:5	I_FogLightSw	Fog Lights Switch		
A56.J2:6	I_CorneringLtSw	Cornering Light Switch		
A56.J2:7	I_HornSw	Horn Switch		
A56.J2:8	I_LuggDoorSw	Luggage Door Switch		
A56.J2:9	I_WdowDrvSw			
A57.J1:17	I_WCLLoDorSe	Wheel Chair Lift Lower Door Sensor		
A57.J1:2	I_WCLDoorLtch	WCL Door firts latch detection door open		

MULTIPLEX INTPUT LIST

Module.Pin#	Signal name	Ignition Key switch	Page	Connected devices
A57.J1:21	I_WCLInstalSig	WCL Cassette installation detection		
A57.J2:1	I_WCLFirstLatch	Wcl pneumatic latch sensor		

MULTIPLEX ERROR MESSAGES LIST

FMI 3 = Shorted High ; FMI 4 = Shorted Low ; FMI 5 = Open Circuit ; FMI 6 = Current above Normal

Cluster message	SID/PSID	FMI	Module.Pin#	Page					

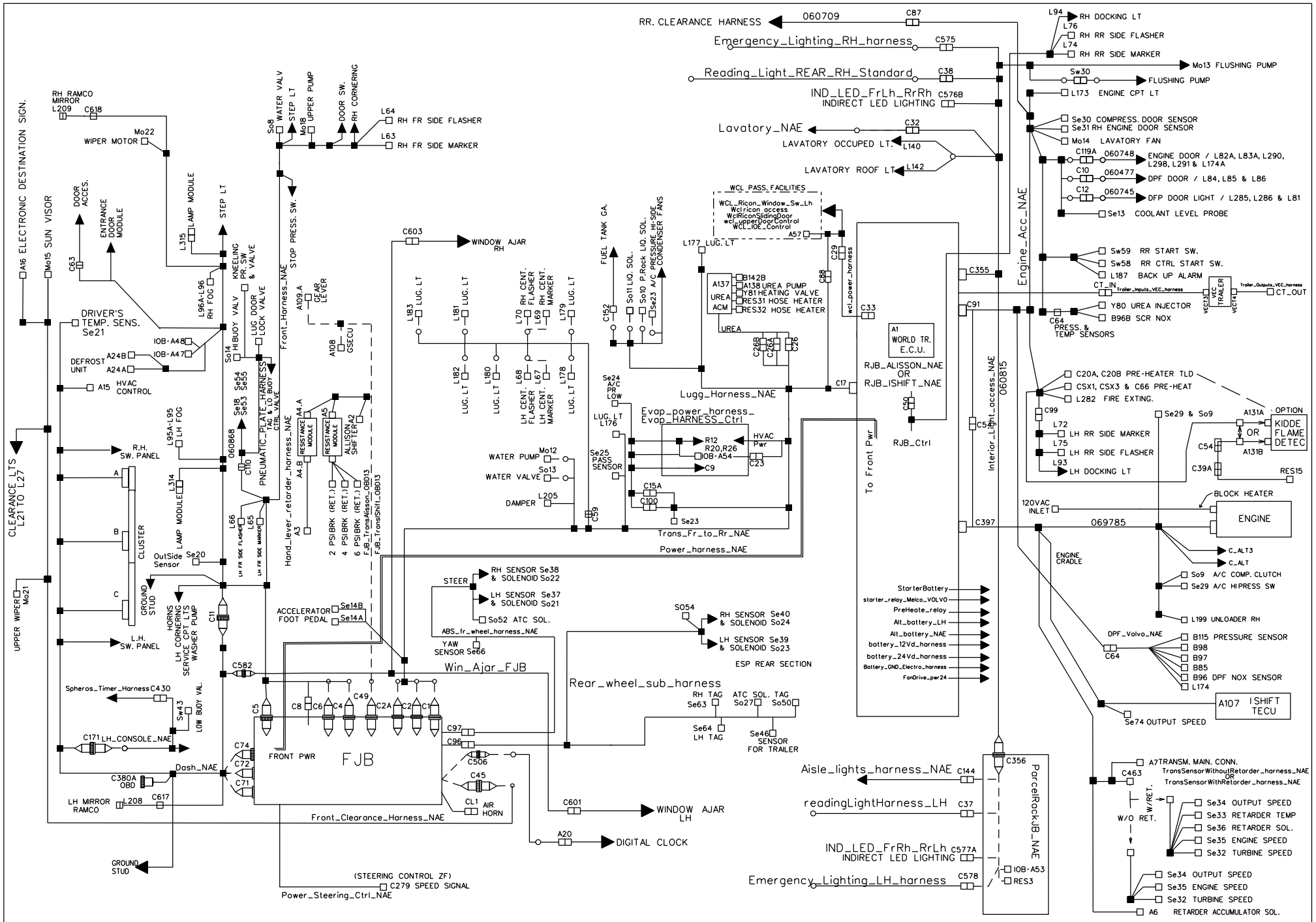

PREVOST	WIRING DIAGRAM	NO: D061640	PAGE: C	REVISION 0

VEHiCLE HARNESS ROADMAP

DESCRIPTION	NAE
CHANGE ORDER	2015007
EFFECTIVE VEHICLE	Prelim(J-3934-0086-0124) Strat of Prod J-0185
wiring revision	0
ABS_fr_wheel_harness_NAE	IdemX3_060124
ACB_Gen2	060672
ailse_light_extension	idemX3_069424
AirHorn_harness	idemX3_060077
Aisle_lights_harness_NAE	IdemX3_060086
Alt_battery_LH	060682
Alt_battery_NAE	060684
Alt_chassis_GND	idemX3_060264
Alt_Jumper_Power	idemX3_060265
Alt_LH_chassis_GND	idemX3_069504
Alternator_Ctrl_harness	idemX3_060088
Alternator_Ctrl_LH_harness	idemX3_069511
Batt_charger_120V_inlet	066226
battery_12Vd_harness	060686
battery_24Vd_harness	060691
Battery__Cable	062371
Battery_GND_Electro_harness	060693
Battery_Gnd_Harness	063592
Beru_antenna_NAE	idemX3_060143
Beru_Fjb	idemX3_060045
bloc resistor 620R wcl	060811
booster_positive_Harness	060692
Cablage__ASM	061180
Dash_NAE	060661
Door_Harness	060670
DPF_door_Harness	060744
DPF_Door_light	060745
DPF_Volvo_NAE	060746
electric_horn_NAE	idemX3_060074
Emergency_Lighting_LH_harness	idemX3_060091
Emergency_Lighting_RH_harness	idemX3_060090
Eng_Cradle_Allisson_NAE	069785
Eng_Cradle_IShift_NAE	060747
Engine_Acc_NAE	060667
Engine_chassis_GND	IdemX3_060306
ENGINE_DOOR	060748
equilizer_harness_Vanner	060855
Evap_HARNESS_Ctrl	060804
Evap_Power_GND_harness	idemX3_060527
Evap_power_harness_	IdemX3_060529
FanDrive_harness	IdemX3_068820
FanDrive_pwr24	idemX3_069245
FanDrive_pwrGnd	idemX3_069246
FJB_2015	060666
FJB_AFSS	idemX3_060042
FJB_TransAlisson_OBD13	idemX3_060542
FJB_TransIShift_OBD13	idemX3_060069
Flame_Detector_Ext_Harness	061046
Front_Clearance_Harness_NAE	060813
Front_flip_screen_NAE	IdemX3_060099
Front_Harness_NAE	060665
Fuel_gauge_harness_NAE	idemX3_060087
Hand_lever_retarder_harness_NAE	idemX3_060083
IND_LED_FrLh_RrRh	idemX3_069544
IND_LED_FrRh_RrLh	idemX3_069545
Inter_Batt_cable	061036
Interior_Light_access_NAE	060815
INVerter_120Vac_LH	067608
INVerter_120Vac_RH	067607
Inverter_harness	060818
InverterJonctionNegatif	060819
InverterJonctionNegatif2	061149
InverterJonctionPositif	060019

VEHICLE HARNESS ROADMAP

DESCRIPTION	NAE
CHANGE ORDER	2015007
EFFECTIVE VEHICLE	Prelim(J-3934-0086-0124) Strat of Prod J-0185
wiring revision	0
JUMPER_120VAC_WCL	068937
Jumper_Indirect_Std	idemX3_069546
Jumper_Indirect_WCL	idemX3_069547
Jumper_Y_120Vac	068221
Lavatory_NAE	060833
LH_CONSOLE_NAE	IdemX3_060544
ENGINE_LINEAR_THERMAL_Harness	IdemX3_069738
Linear_thermal_WO_afss	idemh3_069175
Lugg_Harness_NAE	060854
Outlet_120vac_PRack X3_Seul	068295
ParcelRackJB_NAE	060867
Plug_for_3_sliding_seats	068321
Pneumatic_Plate_harness	060868
Power_harness_NAE	060869
Power_RH_Splitter_harness	060654
Power_Steering_Ctrl_NAE	IdemX3_060378
PowerVecr	060870
PreHeate_relay	060872
PreHeater_GND	idemX3_060308
Preheater_Thermal_harness	idemX3_067676
ProHeat_charger	idemX3_060092
ProHeat_HVAC	idemX3_060093
ProHeat_Interface	idemX3_060228
ProHeat_Timer_Harness	060016
Proheat_To_RJB_harness	069728
RadiatorChassisGnd	idemX3_069279
Radiator door harness	061153
Reading_Light_RH_Standard	060704
Reading_Light_REAR_RH_Standard	061156
readingLightHarness_LH	060706
Rear_wheel_sub_harness	069729
Relay_Melco_batt	idemX3_069542
RJB_ALISSON_NAE	069786
RJB_Ctrl	069730
RJB_ISHIFT_NAE	060708
Rr_clearence_harness	060709
Sound_System_Harness	060643
Sound_system_pwr_harness_NAE	idemX3_069296
SpherosTimerHarness	idemX3_060557
Starter_chassis_GND	idemX3_060307
starter_relay_Melco_VOLVO	060711
StarterBattery	060712
SubWofferExtHarness	idemH3_066743
Trailer_Inputs_VEC_harness	060722
Trailer_Outputs_VEC_harness	060723
Trans_Fr_to_Rr_NAE	060669
TransSensorWithoutRetarder_harness_NAE	idemX3_069778
TransSensorWithRetarder_harness_NAE	idemX3_069777
Urea_Harness_OBD13	060725
USB_5V_Harness	IdemX3_060660
USB_Ipod_harness	idemX3_901349
WCL_IOE_Control	060762
wcl_power_harness	060728
Wcl Ricon Access	idemX3_060782
Wcl ricon lighting	061248
WCL_RICON_Lighting_Jumper	069065
WCL_Ricon_Window_Sw_Lh	idemX3_060310
wcl_upperDoorControl	060751
WclRiconSlidingDoor	060694
Win_Ajar_FJB	idemX3_060574
Win_ajar_window_side_LH_NAE	060754
Win_ajar_window_side_RH_NAE	060756
Win_ajar_window_Ricon_RH_NAE	060757

VEHiCLE HARNESS ROADMAP

DESCRIPTION	NAE	RELS
CHANGE ORDER	2015007	2018011
EFFECTIVE VEHICLE	Prelim(J-3934-0086-0124) Strat of Prod J-0185	K-0370
wiring revision	0	1
ABS_fr_wheel_harness_NAE	IdemX3_060124	
ACB_Gen2	060672	
ailse_light_extension	idemX3_069424	
AirHorn_harness	idemX3_060077	
Aisle_lights_harness_NAE	IdemX3_060086	
Alt_battery_LH	060682	
Alt_battery_NAE	060684	
Alt_chassis_GND	idemX3_060264	
Alt_Jumper_Power	idemX3_060265	
Alt_LH_chassis_GND	idemX3_069504	
Alternator_Ctrl_harness	idemX3_060088	
Alternator_Ctrl_LH_harness	idemX3_069511	
Batt_charger_120V_inlet	066226	
battery_12Vd_harness	060686	
battery_24Vd_harness	060691	
Battery__Cable	062371	
Battery_GND_Electro_harness	060693	
Battery_Gnd_Harness	063592	
Beru_antenna_NAE	idemX3_060143	
Beru_Fjb	idemX3_060045	
bloc resistor 620R wcl	060811	
booster_positive_Harness	060692	
Cablage__ASM	061180	
Dash_NAE	060661	
Door_Harness	060670	
DPF_door_Harness	060744	
DPF_Door_light	060745	
DPF_Volvo_NAE	060746	
electric_horn_NAE	idemX3_060074	
Emergency_Lighting_LH_harness	idemX3_060091	
Emergency_Lighting_RH_harness	idemX3_060090	
Eng_Cradle_Allisson_NAE	069785	
Eng_Cradle_IShift_NAE	060747	
Engine_Acc_NAE	060667	
Engine_chassis_GND	IdemX3_060306	
ENGINE_DOOR	060748	
equilizer_harness_Vanner	060855	
Evap_HARNESS_Ctrl	060804	
Evap_Power_GND_harness	idemX3_060527	
Evap_power_harness_	IdemX3_060529	
FanDrive_harness	IdemX3_068820	
FanDrive_pwr24	idemX3_069245	
FanDrive_pwrGnd	idemX3_069246	
FJB_2015	060666	069910
FJB_AFSS	idemX3_060042	
FJB_TransAlisson_OBD13	idemX3_060542	idemX3_069901
FJB_TransIShift_OBD13	idemX3_060069	
Flame_Detector_Ext_Harness	061046	
Front_Clearance_Harness_NAE	060813	
Front_flip_screen_NAE	IdemX3_060099	
Front_Harness_NAE	060665	
Fuel_gauge_harness_NAE	idemX3_060087	
Hand_lever_retarder_harness_NAE	idemX3_060083	
IND_LED_FrLh_RrRh	idemX3_069544	
IND_LED_FrRh_RrLh	idemX3_069545	
Inter_Batt_cable	061036	
Interior_Light_access_NAE	060815	
INVerter_120Vac_LH	067608	
INVerter_120Vac_RH	067607	
Inverter_harness	060818	
InverterJonctionNegatif	060819	
InverterJonctionNegatif2	061149	
InverterJonctionPositif	060019	

VEHICLE HARNESS ROADMAP

DESCRIPTION	NAE	RELS
CHANGE ORDER	2015007	2018011
EFFECTIVE VEHICLE	Prelim(J-3934-0086-0124) Strat of Prod J-0185	K-0370
wiring revision	0	1
JUMPER_120VAC_WCL	068937	
Jumper_Indirect_Std	idemX3_069546	
Jumper_Indirect_WCL	idemX3_069547	
Jumper_Y_120Vac	068221	
Lavatory_NAE	060833	
LH_CONSOLE_NAE	IdemX3_060544	
ENGINE_LINEAR_THERMAL_Harness	IdemX3_069738	
Linear_thermal_WO_afss	idemh3_069175	
Lugg_Harness_NAE	060854	
Outlet_120vac_PRack X3_Seul	068295	
ParcelRackJB_NAE	060867	
Plug_for_3_sliding_seats	068321	
Pneumatic_Plate_harness	060868	
Power_harness_NAE	060869	
Power_RH_Splitter_harness	060654	
Power_Steering_Ctrl_NAE	IdemX3_060378	
PowerVecr	060870	
PreHeate_relay	060872	
PreHeater_GND	idemX3_060308	
Preheater_Thermal_harness	idemX3_067676	
ProHeat_charger	idemX3_060092	
ProHeat_HVAC	idemX3_060093	
ProHeat_Interface	idemX3_060228	
ProHeat_Timer_Harness	060016	
Proheat_To_RJB_harness	069728	
RadiatorChassisGnd	idemX3_069279	
Radiator door harness	061153	
Reading_Light_RH_Standard	060704	
Reading_Light_REAR_RH_Standard	061156	
readingLightHarness_LH	060706	
Rear_wheel_sub_harness	069729	
Relay_Melco_batt	idemX3_069542	
RJB_ALISSON_NAE	069786	069912
RJB_Ctrl	069730	
RJB_ISHIFT_NAE	060708	
Rr_clearence_harness	060709	
Sound_System_Harness	060643	
Sound_system_pwr_harness_NAE	idemX3_069296	
SpherosTimerHarness	idemX3_060557	
Starter_chassis_GND	idemX3_060307	
starter_relay_Melco_VOLVO	060711	
StarterBattery	060712	
SubWofferExtHarness	idemH3_066743	
Trailer_Inputs_VEC_harness	060722	
Trailer_Outputs_VEC_harness	060723	
Trans_Fr_to_Rr_NAE	060669	069911
TransSensorWithoutRetarder_harness_NAE	idemX3_069778	
TransSensorWithRetarder_harness_NAE	idemX3_069777	
Urea_Harness_OBD13	060725	
USB_5V_Harness	IdemX3_060660	
USB_Ipod_harness	idemX3_901349	
WCL_IOE_Control	060762	
wcl_power_harness	060728	
Wcl Ricon Access	idemX3_060782	
Wcl ricon lighting	061248	
WCL_RICON_Lighting_Jumper	069065	
WCL_Ricon_Window_Sw_Lh	idemX3_060310	
wcl_upperDoorControl	060751	
WclRiconSlidingDoor	060694	
Win_Ajar_FJB	idemX3_060574	
Win_ajar_window_side_LH_NAE	060754	
Win_ajar_window_side_RH_NAE	060756	
Win_ajar_window_Ricon_RH_NAE	060757	

VEHiCLE HARNESS ROADMAP

DESCRIPTION	NAE	RELS	Docking/ Cornering Sw.	Icomera X-Cubed	FIRST NAE ISHIFT TRANSMISSION UPDATE	Air Horn
CHANGE ORDER	2015007	2018011	N/A	2017092	2015007	2018060
EFFECTIVE VEHICLE	Prelim(J-3934-0086-0124) Strat of Prod J-0185	K-0370	K-0400	K-0374	K-0412	K-0511
wiring revision	0	1	2	3	4	5
ABS_fr_wheel_harness_NAE	IdemX3_060124					
ACB_Gen2	060672					
ailse_light_extension	idemX3_069424					
AirHorn_harness	idemX3_060077					idemX3_0610004
Aisle_lights_harness_NAE	IdemX3_060086					
Alt_battery_LH	060682					
Alt_battery_NAE	060684					
Alt_chassis_GND	idemX3_060264					
Alt_Jumper_Power	idemX3_060265					
Alt_LH_chassis_GND	idemX3_069504					
Alternator_Ctrl_harness	idemX3_060088					
Alternator_Ctrl_LH_harness	idemX3_069511					
Batt_charger_120V_inlet	066226					
battery_12Vd_harness	060686					
battery_24Vd_harness	060691					
Battery__Cable	062371					
Battery_GND_Electro_harness	060693					
Battery_Gnd_Harness	063592					
Beru_antenna_NAE	idemX3_060143					
Beru_Fjb	idemX3_060045					
bloc resistor 620R wcl	060811					
booster_positive_Harness	060692					
Cablage__ASM	061180					
Dash_NAE	060661					
Docking Cornering Sw.			0610012			
Door_Harness	060670					
DPF_door_Harness	060744					
DPF_Door_light	060745					
DPF_Volvo_NAE	060746					
electric_horn_NAE	idemX3_060074					
Emergency_Lighting_LH_harness	idemX3_060091					
Emergency_Lighting_RH_harness	idemX3_060090					
Eng_Cradle_Allisson_NAE	069785					
Eng_Cradle_IShift_NAE	060747					
Engine_Acc_NAE	060667					
Engine_chassis_GND	IdemX3_060306					
ENGINE_DOOR	060748					
equilizer_harness_Vanner	060855					
Evap_HARNESS_Ctrl	060804					
Evap_Power_GND_harness	idemX3_060527					
Evap_power_harness_	IdemX3_060529					
FanDrive_harness	IdemX3_068820					
FanDrive_pwr24	idemX3_069245					
FanDrive_pwrGnd	idemX3_069246					
FJB_2015	060666	069910				
FJB_AFSS	idemX3_060042					
FJB_TransAlisson_OBD13	idemX3_060542	idemX3_069901				
FJB_TransIShift_OBD13	idemX3_060069					
Flame_Detector_Ext_Harness	061046					
Front_Clearance_Harness_NAE	060813					
Front_flip_screen_NAE	IdemX3_060099					
Front_Harness_NAE	060665					
Fuel_gauge_harness_NAE	idemX3_060087					
Hand_lever_retarder_harness_NAE	idemX3_060083					
IND_LED_FrLh_RrRh	idemX3_069544					
IND_LED_FrRh_RrLh	idemX3_069545					
Inter_Batt_cable	061036					
Interior_Light_access_NAE	060815					
INVerter_120Vac_LH	067608					
INVerter_120Vac_RH	067607					
Inverter_harness	060818					
InverterJonctionNegatif	060819					
InverterJonctionNegatif2	061149					
InverterJonctionPositif	060019					

VEHICLE HARNESS ROADMAP

DESCRIPTION	NAE	RELS	Docking/ Cornering Sw.	Icomera X-Cubed	FIRST NAE ISHIFT TRANSMISSION UPDATE	Air Horn
CHANGE ORDER	2015007	2018011	N/A	2017092	2015007	2018060
EFFECTIVE VEHICLE	Prelim(J-3934-0086-0124) Strat of Prod J-0185	K-0370	K-0400	K-0374	K-0412	K-0511
wiring revision	0	1	2	3	4	5
JUMPER_120VAC_WCL	068937					
Jumper_Indirect_Std	idemX3_069546					
Jumper_Indirect_WCL	idemX3_069547					
Jumper_Y_120Vac	068221					
Lavatory_NAE	060833					
LH_CONSOLE_NAE	IdemX3_060544					
ENGINE_LINEAR_THERMAL_Harness	IdemX3_069738					
Linear_thermal_WO_afss	idemH3_069175					
Lugg_Harness_H341	0610010					
Lugg_Harness_NAE	060854					
Outlet_120vac_PRack X3_Seul	068295					
ParcelRackJB_NAE	060867					
Plug_for_2_sliding_seats	067984					
Plug_for_3_sliding_seats	068321					
Pneumatic_Plate_harness	060868					
Power_harness_NAE	060869					
Power_RH_Splitter_harness	060654					
Power_Steering_Ctrl_NAE	IdemX3_060378					
PowerVecr	060870					
PreHeate_relay	060872					
PreHeater_GND	idemX3_060308					
Preheater_Thermal_harness	idemX3_067676					
ProHeat_charger	idemX3_060092					
ProHeat_HVAC	idemX3_060093					
ProHeat_Interface	idemX3_060228					
ProHeat_Timer_Harness	060016					
Proheat_To_RJB_harness	069728					
RadiatorChassisGnd	idemX3_069279					
Radiator door harness	061153					
Reading_Light_RH_Standard	060704					
Reading_Light_REAR_RH_Standard	061156					
readingLightHarness_LH	060706					
Rear_wheel_sub_harness	069729					
Relay_Melco_batt	idemX3_069542					
RJB_ALISSON_NAE	069786	069912				
RJB_Ctrl	069730					
RJB_ISHIFT_NAE	060708					
Rr_clearence_harness	060709					
Sound_System_Harness	060643				060708	
Sound_system_pwr_harness_NAE	idemX3_069296					
SpherosTimerHarness	idemX3_060557					
Starter_chassis_GND	idemX3_060307					
starter_relay_Melco_VOLVO	060711					
StarterBattery	060712					
SubWofferExtHarness	idemH3_066743					
Trailer_Inputs_VEC_harness	060722					
Trailer_Outputs_VEC_harness	060723					
Trans_Fr_to_Rr_NAE	060669	069911				
TransSensorWithoutRetarder_harness_NAE	idemX3_069778					
TransSensorWithRetarder_harness_NAE	idemX3_069777					
Urea_Harness_OBD13	060725					
USB_5V_Harness	IdemX3_060660					
USB_Ipod_harness	idemX3_901349					
WCL_IOE_Control	060762					
wcl_power_harness	060728					
Wcl Ricon Access	idemX3_060782					
Wcl ricon lighting	061248					
WCL_RICON_Lighting_Jumper	069065					
WCL_Ricon_Window_Sw_Lh	idemX3_060310					
wcl_upperDoorControl	060751					
WclRiconSlidingDoor	060694					
wifi_system_gnd				idemX3_069925		
Win_Ajar_FJB	idemX3_060574					
Win_ajar_window_side_LH_NAE	060754					
Win_ajar_window_side_RH_NAE	060756					
Win_ajar_window_Ricon_RH_NAE	060757					

VEHICLE HARNESS ROADMAP

DESCRIPTION	NAE	RELS	Docking/Cornering Sw.	Icomera X-Cubed	FIRST NAE ISHIFT TRANSMISSION UPDATE	Klaxon pneumatique	Inverter display Cable
CHANGE ORDER	**2015007**	**2018011**	**N/A**	**2017092**	**2015007**	**2018060**	**2018108**
EFFECTIVE VEHICLE	**proto-2902**	**K-0370**	**K-0400**	**K-0374**	**K-0412**	**K-0511**	**K-0523**
wiring revision	**0**	**1**	**2**	**3**	**4**	**5**	**6**
Harness (126)							
ABS_fr_wheel_harness_NAE	IdemX3_060124						
ACB_Gen2	060672						
ailse_light_extension	idemX3_069424						
AirHorn_harness	idemX3_060077					idemX3_0610004	
Aisle_lights_harness_NAE	IdemX3_060086						
Alt_battery_LH	060682						
Alt_battery_NAE	060684						
Alt_chassis_GND	idemX3_060264						
Alt_Jumper_Power	idemX3_060265						
Alt_LH_chassis_GND	idemX3_069504						
Alternator_Ctrl_harness	idemX3_060088						
Alternator_Ctrl_LH_harness	idemX3_069511						
Batt_charger_120V_inlet	066226						
battery_12Vd_harness	060686						
battery_24Vd_harness	060691						
Battery__Cable	062371						
Battery_GND_Electro_harness	060693						
Battery_Gnd_Harness	063592_microstation						
Beru_antenna_NAE	idemX3_060143						
Beru_Fjb	idemX3_060045						
bloc resistor 620R wcl	060811						
booster_positive_Harness	060692						
Cablage__ASM	061180						
Dash_NAE	060661						
Docking Cornering Sw.			0610012 / 066613 (SAV)				
Door_Harness	060670						
DPF_door_Harness	060744						
DPF_Door_light	060745						
DPF_Volvo_NAE	060746						
electric_horn_NAE	idemX3_060074						
Emergency_Lighting_LH_harness	idemX3_060091						
Emergency_Lighting_RH_harness	idemX3_060090						
Eng_Cradle_Allisson_NAE	060662						
Eng_Cradle_IShift_NAE	060747						
Engine_Acc_NAE	060667						
Engine_chassis_GND	IdemX3_060306						
ENGINE_DOOR	060748						
equilizer_harness_Vanner	060855						
Evap_HARNESS_Ctrl	060804						
Evap_Power_GND_harness	idemX3_060527						
Evap_power_harness_	IdemX3_060529						
FanDrive_harness	IdemX3_068820						
FanDrive_pwr24	idemX3_069245						
FanDrive_pwrGnd	idemX3_069246						
FJB_2015	060666	069910					
FJB_AFSS	idemX3_060042						
FJB_TransAlisson_OBD13	idemX3_060542	idemX3_069901					
FJB_TransIShift_OBD13	idemX3_060069						
Flame_Detector_Ext_Harness	061046						
Front_Clearance_Harness_NAE	060813						
Front_flip_screen_NAE	IdemX3_060099						
Front_Harness_NAE	060665						
Fuel_gauge_harness_NAE	idemX3_060087						
Hand_lever_retarder_harness_NAE	idemX3_060083						
IND_LED_FrLh_RrRh	idemX3_069544						
IND_LED_FrRh_RrLh	idemX3_069545						
Inter_Batt_cable	061036						
Interior_Light_access_NAE	060815						
INVerter_120Vac_LH	067608						
INVerter_120Vac_RH	067607						
Inverter driver display harness							0610039
Inverter_harness	060818						
InverterJonctionNegatif	060819						
InverterJonctionNegatif2	061149						
InverterJonctionPositif	060019						
JUMPER_120VAC_WCL	068937						

VEHICLE HARNESS ROADMAP

DESCRIPTION	NAE	RELS	Docking/Cornering Sw.	Icomera X-Cubed	FIRST NAE ISHIFT TRANSMISSION UPDATE	Klaxon pneumatique	Inverter display Cable
CHANGE ORDER	**2015007**	**2018011**	**N/A**	**2017092**	**2015007**	**2018060**	**2018108**
EFFECTIVE VEHICLE	**proto-2902**	**K-0370**	**K-0400**	**K-0374**	**K-0412**	**K-0511**	**K-0523**
wiring revision	**0**	**1**	**2**	**3**	**4**	**5**	**6**
Harness (126)							
Jumper_Indirect_Std	idemX3_069546						
Jumper_Indirect_WCL	idemX3_069547						
Jumper_Y_120Vac	068221						
Lavatory_NAE	060833						
LH_CONSOLE_NAE	IdemX3_060544						
ENGINE_LINEAR_THERMAL_Harness	IdemX3_069738						
Linear_thermal_WO_afss	idemH3_069175						
Lugg_Harness_H341	0610010						
Lugg_Harness_NAE	060854						
Outlet_120vac_PRack X3_Seul	068295						
ParcelRackJB_NAE	060867						
Plug_for_2_sliding_seats	067984						
Plug_for_3_sliding_seats	068321						
Pneumatic_Plate_harness	060868						
Power_harness_NAE	060869						
Power_RH_Splitter_harness	060654						
Power_Steering_Ctrl_NAE	IdemX3_060378						
PowerVecr	060870						
PreHeate_relay	060872						
PreHeater_GND	idemX3_060308						
Preheater_Thermal_harness	idemX3_067676						
ProHeat_charger	idemX3_060092						
ProHeat_HVAC	idemX3_060093						
ProHeat_Interface	idemX3_060228						
ProHeat_Timer_Harness	060016						
Proheat_To_RJB_harness	069728						
RadiatorChassisGnd	idemX3_069279						
Radiator door harness	061153						
Reading_Light_RH_Standard	060704						
Reading_Light_REAR_RH_Standard	061156						
readingLightHarness_LH	060706						
Rear_wheel_sub_harness	069729						
Relay_Melco_batt	idemX3_069542						
RJB_ALISSON_NAE	060762	069912					
RJB_Ctrl	069730						
RJB_ISHIFT_NAE	060708				060708		
Rr_clearence_harness	060709						
Sound_System_Harness	060643						
Sound_system_pwr_harness_NAE	idemX3_069296						
SpherosTimerHarness	idemX3_060557						
Starter_chassis_GND	idemX3_060307						
starter_relay_Melco_VOLVO	060711						
StarterBattery	060712						
SubWofferExtHarness	idemH3_066743						
Trailer_Inputs_VEC_harness	060722						
Trailer_Outputs_VEC_harness	060723						
Trans_Fr_to_Rr_NAE	060669	069911					
TransSensorWithoutRetarder_harness_NAE	idemX3_060082						
TransSensorWithRetarder_harness_NAE	idemX3_060081						
Urea_Harness_OBD13	060725						
USB_5V_Harness	IdemX3_060660						
USB_Ipod_harness	idemX3_901349						
WCL_IOE_Control	060726						
wcl_power_harness	060728						
Wcl Ricon Access	Idem X3 060782						
Wcl ricon lighting	061248						
WCL_RICON_Lighting_Jumper	069065						
WCL_Ricon_Window_Sw_Lh	idemX3_060310						
wcl_upperDoorControl	060751						
WclRiconSlidingDoor	060694						
wifi_system_gnd				idemX3_069925			
Win_Ajar_FJB	idemX3_060574						
Win_ajar_window_side_LH_NAE	060754						
Win_ajar_window_side_RH_NAE	060756						
Win_ajar_window_Ricon_RH_NAE	060757						

VEHICLE HARNESS ROADMAP

DESCRIPTION	NAE	RELS	Docking/Cornering Sw.	Icomera X-Cubed	FIRST NAE ISHIFT TRANSMISSION UPDATE	Klaxon pneumatique	Inverter display Cable	Harness chain for WCL door
ORDRE DE CHANGEMENT	**2015007**	**2018011**	**N/A**	**2017092**	**2015007**	**2018060**	**2018108**	**2018051**
VÉH. EFFECTIF	**proto-2902**	**K-0370**	**K-0400**	**K-0374**	**K-0412**	**K-0511**	**K-0523**	**K-0575**
wiring revision	**0**	**1**	**2**	**3**	**4**	**5**	**6**	**7**
Harness (126)								
ABS_fr_wheel_harness_NAE	IdemX3_060124							
ACB_Gen2	060672							
ailse_light_extension	idemX3_069424							
AirHorn_harness	idemX3_060077					idemX3_0610004		
Aisle_lights_harness_NAE	IdemX3_060086							
Alt_battery_LH	060682							
Alt_battery_NAE	060684							
Alt_chassis_GND	idemX3_060264							
Alt_Jumper_Power	idemX3_060265							
Alt_LH_chassis_GND	idemX3_069504							
Alternator_Ctrl_harness	idemX3_060088							
Alternator_Ctrl_LH_harness	idemX3_069511							
Batt_charger_120V_inlet	066226							
battery_12Vd_harness	060686							
battery_24Vd_harness	060691							
Battery__Cable	062371							
Battery_GND_Electro_harness	060693							
Battery_Gnd_Harness	063592_microstation							
Beru_antenna_NAE	idemX3_060143							
Beru_Fjb	idemX3_060045							
bloc resistor 620R wcl	060811							
booster_positive_Harness	060692							
Cablage__ASM	061180							
Dash_NAE	060661							
Docking Cornering Sw.			0610012 / 066613 (SAV)					
Door_Harness	060670							
DPF_door_Harness	060744							
DPF_Door_light	060745							
DPF_Volvo_NAE	060746							
electric_horn_NAE	idemX3_060074							
Emergency_Lighting_LH_harness	idemX3_060091							
Emergency_Lighting_RH_harness	idemX3_060090							
Eng_Cradle_Allisson_NAE	060662							
Eng_Cradle_IShift_NAE	060747							
Engine_Acc_NAE	060667							
Engine_chassis_GND	IdemX3_060306							
ENGINE_DOOR	060748							
equilizer_harness_Vanner	060855							
Evap_HARNESS_Ctrl	060804							
Evap_Power_GND_harness	idemX3_060527							
Evap_power_harness_	IdemX3_060529							
FanDrive_harness	IdemX3_068820							
FanDrive_pwr24	idemX3_069245							
FanDrive_pwrGnd	idemX3_069246							
FJB_2015	060666	069910						
FJB_AFSS	idemX3_060042							
FJB_TransAlisson_OBD13	idemX3_060542	idemX3_069901						
FJB_TransIShift_OBD13	idemX3_060069							
Flame_Detector_Ext_Harness	061046							
Front_Clearance_Harness_NAE	060813							
Front_flip_screen_NAE	IdemX3_060099							
Front_Harness_NAE	060665							
Fuel_gauge_harness_NAE	idemX3_060087							
Hand_lever_retarder_harness_NAE	idemX3_060083							
IND_LED_FrLh_RrRh	idemX3_069544							
IND_LED_FrRh_RrLh	idemX3_069545							
Inter_Batt_cable	061036							
Interior_Light_access_NAE	060815							
INVerter_120Vac_LH	067608							
INVerter_120Vac_RH	067607							
Inverter driver display harness							0610039	
Inverter_harness	060818							
InverterJonctionNegatif	060819							
InverterJonctionNegatif2	061149							
InverterJonctionPositif	060019							
JUMPER_120VAC_WCL	068937							

VEHICLE HARNESS ROADMAP

DESCRIPTION	NAE	RELS	Docking/Cornering Sw.	Icomera X-Cubed	FIRST NAE ISHIFT TRANSMISSION UPDATE	Klaxon pneumatique	Inverter display Cable	Harness chain for WCL door
ORDRE DE CHANGEMENT	**2015007**	**2018011**	**N/A**	**2017092**	**2015007**	**2018060**	**2018108**	**2018051**
VÉH. EFFECTIF	**proto-2902**	**K-0370**	**K-0400**	**K-0374**	**K-0412**	**K-0511**	**K-0523**	**K-0575**
wiring revision	**0**	**1**	**2**	**3**	**4**	**5**	**6**	**7**
Harness (126)								
Jumper_Indirect_Std	idemX3_069546							
Jumper_Indirect_WCL	idemX3_069547							
Jumper_Y_120Vac	068221							
Lavatory_NAE	060833							
LH_CONSOLE_NAE	IdemX3_060544							
ENGINE_LINEAR_THERMAL_Harness	IdemX3_069738							
Linear_thermal_WO_afss	idemH3_069175							
Lugg_Harness_H341	0610010							
Lugg_Harness_NAE	060854							
Outlet_120vac_PRack X3_Seul	068295							
ParcelRackJB_NAE	060867							
Plug_for_2_sliding_seats	067984							
Plug_for_3_sliding_seats	068321							
Pneumatic_Plate_harness	060868							
Power_harness_NAE	060869							
Power_RH_Splitter_harness	060654							
Power_Steering_Ctrl_NAE	IdemX3_060378							
PowerVecr	060870							
PreHeate_relay	060872							
PreHeater_GND	idemX3_060308							
Preheater_Thermal_harness	idemX3_067676							
ProHeat_charger	idemX3_060092							
ProHeat_HVAC	idemX3_060093							
ProHeat_Interface	idemX3_060228							
ProHeat_Timer_Harness	060016							
Proheat_To_RJB_harness	069728							
RadiatorChassisGnd	idemX3_069279							
Radiator door harness	061153							
Reading_Light_RH_Standard	060704							
Reading_Light_REAR_RH_Standard	061156							
readingLightHarness_LH	060706							
Rear_wheel_sub_harness	069729							
Relay_Melco_batt	idemX3_069542							
RJB_ALISSON_NAE	060762	069912						
RJB_Ctrl	069730							
RJB_ISHIFT_NAE	060708				060708			
Rr_clearence_harness	060709							
Sound_System_Harness	060643							
Sound_system_pwr_harness_NAE	idemX3_069296							
SpherosTimerHarness	idemX3_060557							
Starter_chassis_GND	idemX3_060307							
starter_relay_Melco_VOLVO	060711							
StarterBattery	060712							
SubWofferExtHarness	idemH3_066743							
Trailer_Inputs_VEC_harness	060722							
Trailer_Outputs_VEC_harness	060723							
Trans_Fr_to_Rr_NAE	060669	069911						
TransSensorWithoutRetarder_harness_NAE	idemX3_060082							
TransSensorWithRetarder_harness_NAE	idemX3_060081							
Urea_Harness_OBD13	060725							
USB_5V_Harness	IdemX3_060660							
USB_Ipod_harness	idemX3_901349							
WCL_IOE_Control	060726							
wcl_power_harness	060728							
Wcl Ricon Access	Idem X3 060782							
Wcl ricon lighting	061248							
WCL_RICON_Lighting_Jumper	069065							
WCL_Ricon_Window_Sw_Lh	idemX3_060310							
wcl_upperDoorControl	060751							
WclRiconSlidingDoor	060694							069992
wifi_system_gnd				idemX3_069925				
Win_Ajar_FJB	idemX3_060574							
Win_ajar_window_side_LH_NAE	060754							
Win_ajar_window_side_RH_NAE	060756							
Win_ajar_window_Ricon_RH_NAE	060757							

VEHICLE HARNESS ROADMAP

DESCRIPTION	NAE	Torsadé les fils de sortie de vitesse tr	WCL	RELS	Docking/ Cornering Sw.	Icomera X-Cubed	FIRST NAE ISHIFT TRANSMISSION UPDATE	Klaxon pneumatic	Inverter display Cable	Harness chain for WCL door	OBD19	Alternateur Remy ready	Gigavac	Curb Light Ready	Chauffe eau
ORDRE DE CHANGEMENT	**2015007**	**2017085**	**2016032**	**2018011**	**N/A**	**2017092**	**2015007**	**2018060**	**2018108**	**2018051**	**2018055**	**2018012**	**2018110**	**2018124**	**2018042**
VÉH. EFFECTIF	**proto-2902**		***K0207***	**K-0370**	**K-0400**	**K-0374**	**K-0412**	**K-0511**	**K-0523**	**575**	**0605**	**0605**	**605**	**0605**	**0605**
wiring revision	**0**	**0**	***0***	**1**	**2**	**3**	**4**	**5**	**6**	***7***	**8**	**8**	**8**	**8**	**8**
Harness (126)															
ABS_fr_wheel_harness_NAE	060124														
ACB_Gen2	060672														
ailse_light_extension	069424														
AirHorn_harness	060077							0610004							
Aisle_lights_harness_NAE	060086														
Alt_battery_LH	060682														
Alt_battery_NAE	060684														
Alt_chassis_GND	060264														
Alt_Jumper_Power	060265														
Alt_LH_chassis_GND	069504														
Alternator_Ctrl_harness	060088														
Alternator_Ctrl_LH_harness	069511														
Batt_charger_120V_inlet	066226														
battery_12Vd_harness	060686														
battery_24Vd_harness	060691														
Battery__Cable	062371														
Battery_GND_Electro_harness	060693														
Battery_Gnd_Harness	063592														
Beru_antenna_NAE	060143														
Beru_Fjb	060045														
bloc resistor 620R wcl	060811														
booster_positive_Harness	060692														
Cablage__ASM	061180														
Dash_NAE	060661														
Docking Cornering Sw.					0610012 / 066613 (SAV)										
Door_Harness	060670														
DPF_door_Harness	060744														
DPF_Door_light	060745														
DPF_Volvo_NAE	060746														
Driver_120VAC_Outlet															
electric_horn_NAE	060074														
Emergency_Lighting_LH_harness	060091														
Emergency_Lighting_LH_harness _W_Curblights															
Emergency_Lighting_RH_harness	060090														
Emergency_Lighting_RH_harness_W_Curblights															
Eng_Cradle_Allisson_NAE	060662	069785													
Eng_Cradle_IShift_NAE	060747														
Engine_Acc_NAE	060667										0610014				
Engine_chassis_GND	060306														
ENGINE_DOOR	060748														
Engine_Block_Heater_Harness															
equilizer_harness_Vanner	060855														
Evap_HARNESS_Ctrl	060804														
Evap_Power_GND_harness	060527														

VEHICLE HARNESS ROADMAP

DESCRIPTION	NAE	Torsadé les fils de sortie de vitesse tr	WCL	RELS	Docking/ Cornering Sw.	Icomera X-Cubed	FIRST NAE ISHIFT TRANSMISSION UPDATE	Klaxon pneumatic	Inverter display Cable	Harness chain for WCL door	OBD19	Alternateur Remy ready	Gigavac	Curb Light Ready	Chauffe eau
ORDRE DE CHANGEMENT	**2015007**	**2017085**	**2016032**	**2018011**	**N/A**	**2017092**	**2015007**	**2018060**	**2018108**	**2018051**	**2018055**	**2018012**	**2018110**	**2018124**	**2018042**
VÉH. EFFECTIF	**proto-2902**		***K0207***	**K-0370**	**K-0400**	**K-0374**	**K-0412**	**K-0511**	**K-0523**	**575**	**0605**	**0605**	**605**	**0605**	**0605**
wiring revision	**0**	**0**	***0***	**1**	**2**	**3**	**4**	**5**	**6**	***7***	**8**	**8**	**8**	**8**	**8**
Harness (126)															
Evap_power_harness_	060529														
FanDrive_harness	068820														
FanDrive_pwr24	069245														
FanDrive_pwrGnd	069246														
FJB_2015	060666			069910											
FJB_AFSS	060042														
FJB_TransAlisson_OBD13	060542			069901							0610096				
FJB_TransIShift_OBD13	060069														
Flame_Detector_Ext_Harness	061046														
Front_Clearance_Harness_NAE	060813														
Front_flip_screen_NAE	060099														
Front_Harness_NAE	060665														
Fuel_gauge_harness_NAE	060087														
Hand_lever_retarder_harness_NAE	060083														
IND_LED_FrLh_RrRh	069544														
IND_LED_FrRh_RrLh	069545														
Inter_Batt_cable	061036														
Interior_Light_access_NAE	060815													0610105	
INVerter_120Vac_LH	067608														
INVerter_120Vac_RH	067607														
Inverter driver display harness									0610039						
Inverter_harness	060818														
InverterJonctionNegatif	060819														
InverterJonctionNegatif2	061149														
InverterJonctionPositif	060019														
JUMPER_120VAC_WCL	068937														
Jumper_Indirect_Std	069546														
Jumper_Indirect_WCL	069547														
Jumper_Y_120Vac	068221														
Lavatory_NAE	060833														
LH_CONSOLE_NAE	060544														
ENGINE_LINEAR_THERMAL_Harness	069738										0610154				
Linear_thermal_WO_afss	069175														
Lugg_Harness_H341	0610010														
Lugg_Harness_NAE	060854														
Outlet_120vac_PRack X3_Seul	068295														
ParcelRackJB_NAE	060867													0610106	
Plug_for_2_sliding_seats	067984														
Plug_for_3_sliding_seats	068321														
Pneumatic_Plate_harness	060868														
Power_harness_NAE	060869														
Power_RH_Splitter_harness	060654														
Power_Steering_Ctrl_NAE	060378														
PowerVecr	060870														

VEHICLE HARNESS ROADMAP

DESCRIPTION	NAE	Torsadé les fils de sortie de vitesse tr	WCL	RELS	Docking/ Cornering Sw.	Icomera X-Cubed	FIRST NAE ISHIFT TRANSMISSION UPDATE	Klaxon pneumatic	Inverter display Cable	Harness chain for WCL door	OBD19	Alternateur Remy ready	Gigavac	Curb Light Ready	Chauffe eau
ORDRE DE CHANGEMENT	**2015007**	**2017085**	**2016032**	**2018011**	**N/A**	**2017092**	**2015007**	**2018060**	**2018108**	**2018051**	**2018055**	**2018012**	**2018110**	**2018124**	**2018042**
VÉH. EFFECTIF	**proto-2902**		***K0207***	**K-0370**	**K-0400**	**K-0374**	**K-0412**	**K-0511**	**K-0523**	**575**	**0605**	**0605**	**605**	**0605**	**0605**
wiring revision	**0**	**0**	***0***	**1**	**2**	**3**	**4**	**5**	**6**	***7***	**8**	**8**	**8**	**8**	**8**
Harness (126)															
PreHeate_relay	060872														
PreHeater_GND	060308														
Preheater_Thermal_harness	067676														
Preheater_ON_W_Batt_Charger	060092														
Preheater_ON_W_HVAC	060093														
ProHeat_Interface	060228														
ProHeat_Timer_Harness	060016														
Proheat_To_RJB_harness	069728														0610115
RadiatorChassisGnd	069279														
Radiator door harness	061153														
Reading_Light_RH_Standard	060704														
Reading_Light_REAR_RH_Standard	061156													0610112	
readingLightHarness_LH	060706													0610113	
Rear_wheel_sub_harness	069729														
Relay_Melco_batt	069542														
RJB_ALISSON_NAE	060762	069786		069912								0610067			0610067
RJB_Ctrl	069730												0610084		
RJB_ISHIFT_NAE	060708						060708					0610069			0610069
Rr_clearence_harness	060709														
Sound_System_Harness	060643														
Sound_system_pwr_harness_NAE	069296														
SpherosTimerHarness	060557														
Starter_chassis_GND	060307														
starter_relay_Melco_VOLVO	060711														
StarterBattery	060712														
SubWofferExtHarness	066743														
TPMS_Lite_Adapter											0610073				
Trailer_Inputs_VEC_harness	060722														
Trailer_Outputs_VEC_harness	060723														
Trans_Fr_to_Rr_NAE	060669			069911							0610018				0610018
TransSensorWithoutRetarder_harness_NAE	060082	069778													
TransSensorWithRetarder_harness_NAE	060081	069777													
Urea_Harness_OBD13	060725										0610019				
USB_5V_Harness	060660														
USB_Ipod_harness	901349														
WCL_IOE_Control	060726														
wcl_power_harness	060728														
Wcl Ricon Access	060782		069744												
Wcl ricon lighting	061248														
WCL_RICON_Lighting_Jumper	069065														
WCL_Ricon_Window_Sw_Lh	060310														
wcl_upperDoorControl	060751														
WclRiconSlidingDoor	060694									069992					
wifi_system_gnd						069925									
Win_Ajar_FJB	060574														

VEHICLE HARNESS ROADMAP

DESCRIPTION	NAE	Torsadé les fils de sortie de vitesse tr	WCL	RELS	Docking/ Cornering Sw.	Icomera X-Cubed	FIRST NAE ISHIFT TRANSMISSION UPDATE	Klaxon pneumatic	Inverter display Cable	Harness chain for WCL door	OBD19	Alternateur Remy ready	Gigavac	Curb Light Ready	Chauffe eau
ORDRE DE CHANGEMENT	**2015007**	**2017085**	**2016032**	**2018011**	**N/A**	**2017092**	**2015007**	**2018060**	**2018108**	**2018051**	**2018055**	**2018012**	**2018110**	**2018124**	**2018042**
VÉH. EFFECTIF	**proto-2902**		***K0207***	**K-0370**	**K-0400**	**K-0374**	**K-0412**	**K-0511**	**K-0523**	**575**	**0605**	**0605**	**605**	**0605**	**0605**
wiring revision	**0**	**0**	***0***	**1**	**2**	**3**	**4**	**5**	**6**	***7***	**8**	**8**	**8**	**8**	**8**
Harness (126)															
Win_ajar_window_side_LH_NAE	060754														
Win_ajar_window_side_RH_NAE	060756														
Win_ajar_window_Ricon_RH_NAE	060757														

VEHICLE HARNESS ROADMAP

DESCRIPTION	Ref Only	OBD19	Alternateur Remy ready	Gigavac	Curb Light Ready	Chauffe eau
ORDRE DE CHANGEMENT		**2018055**	**2018012**	**2018110**	**2018124**	**2018042**
VÉH. EFFECTIF	**Before 605**	**0605**	**0605**	**0605**	**0605**	**0655**
wiring revision	***Before 8***	**8**	**8**	**8**	**8**	**10**
Harness (126)						
ABS_fr_wheel_harness_NAE	IdemX3_060124					
ACB_Gen2	060672					
ailse_light_extension	idemX3_069424					
AirHorn_harness	idemX3_0610004					
Aisle_lights_harness_NAE	IdemX3_060086					
Alt_battery_LH	060682					
Alt_battery_NAE	060684					
Alt_chassis_GND	idemX3_060264					
Alt_Jumper_Power	idemX3_060265					
Alt_LH_chassis_GND	idemX3_069504					
Alternator_Ctrl_harness	idemX3_060088					
Alternator_Ctrl_LH_harness	idemX3_069511					
Batt_charger_120V_inlet	066226					
battery_12Vd_harness	060686					
battery_24Vd_harness	060691					
Battery__Cable	062371					
Battery_GND_Electro_harness	060693					
Battery_Gnd_Harness	063592_microstation					
Beru_antenna_NAE	idemX3_060143					
Beru_Fjb	idemX3_060045					
bloc resistor 620R wcl	060811					
booster_positive_Harness	060692					
Cablage__ASM	061180_JPEG					
Dash_NAE	060661					
Docking Cornering Sw.	0610012/066613(SAV)					
Door_Harness	060670					
DPF_door_Harness	060744					
DPF_Door_light	060745					
DPF_Volvo_NAE	060746					
Driver_120VAC_Outlet	NA					
electric_horn_NAE	idemX3_060074					
Emergency_Lighting_LH_harness	idemX3_060091					
Emergency_Lighting_RH_harness	idemX3_060090					
Eng_Cradle_Allisson_NAE	069785					
Eng_Cradle_IShift_NAE	060747					
Engine_Acc_NAE	060667	0610014				
Engine_chassis_GND	IdemX3_060306					
ENGINE_DOOR	060748					
Engine_Block_Heater_Harness						
equilizer_harness_Vanner	060855					
Evap_HARNESS_Ctrl	060804					
Evap_Power_GND_harness	idemX3_060527					
Evap_power_harness_	IdemX3_060529					
FanDrive_harness	IdemX3_068820					
FanDrive_pwr24	idemX3_069245					
FanDrive_pwrGnd	idemX3_069246					
FJB_2015	069910					
FJB_AFSS	idemX3_060042					
FJB_TransAlisson_OBD13	idemX3_069901	IdemX3_0610096				
FJB_TransIShift_OBD13	idemX3_060069					
Flame_Detector_Ext_Harness	061046					
Front_Clearance_Harness_NAE	060813					
Front_flip_screen_NAE	IdemX3_060099					
Front_Harness_NAE	060665					
Fuel_gauge_harness_NAE	idemX3_060087					
Hand_lever_retarder_harness_NAE	idemX3_060083					
IND_LED_FrLh_RrRh	idemX3_069544					
IND_LED_FrRh_RrLh	idemX3_069545					
Inter_Batt_cable	061036					
Interior_Light_access_NAE	060815				0610105	
INVerter_120Vac_LH	067608					
INVerter_120Vac_RH	067607					
Inverter driver display harness	0610039					
Inverter_harness	060818					
InverterJonctionNegatif	060819					
InverterJonctionNegatif2	061149					

VEHICLE HARNESS ROADMAP

DESCRIPTION	Ref Only	OBD19	Alternateur Remy ready	Gigavac	Curb Light Ready	Chauffe eau
ORDRE DE CHANGEMENT	**0**	**2018055**	**2018012**	**2018110**	**2018124**	**2018042**
VÉH. EFFECTIF	**Before 605**	**0605**	**0605**	**0605**	**0605**	**0655**
wiring revision	***Before 8***	**8**	**8**	**8**	**8**	**10**
Harness (126)						
InverterJonctionPositif	060019					
JUMPER_120VAC_WCL	068937					
Jumper_Indirect_Std	idemX3_069546					
Jumper_Indirect_WCL	idemX3_069547					
Jumper_Y_120Vac	068221					
Lavatory_NAE	060833					
LH_CONSOLE_NAE	IdemX3_060544					
ENGINE_LINEAR_THERMAL_Harness	IdemX3_069738	0610154				
Linear_thermal_WO_afss	idemH3_069175					
Lugg_Harness_H341	0610010					
Lugg_Harness_NAE	060854					
Outlet_120vac_PRack X3_Seul	068295					
ParcelRackJB_NAE	060867				0610106	
Plug_for_2_sliding_seats	067984					
Plug_for_3_sliding_seats	068321					
Pneumatic_Plate_harness	060868					
Power_harness_NAE	060869					
Power_RH_Splitter_harness	060654					
Power_Steering_Ctrl_NAE	IdemX3_060378					
PowerVecr	060870					
PreHeate_relay	060872					
PreHeater_GND	idemX3_060308					
Preheater_Thermal_harness	idemX3_067676					
Preheater_ON_W_Batt_Charger	idemX3_060092					
Preheater_ON_W_HVAC	idemX3_060093					
ProHeat_Interface	idemX3_060228					
ProHeat_Timer_Harness	060016					
Proheat_To_RJB_harness	069728					0610115
RadiatorChassisGnd	idemX3_069279					
Radiator door harness	061153					
Reading_Light_RH_Standard	060704					
Reading_Light_REAR_RH_Standard	061156				0610112	
readingLightHarness_LH	060706				0610113	
Rear_wheel_sub_harness	069729					
Relay_Melco_batt	idemX3_069542					
RJB_ALISSON_NAE	069912		0610067			0610172
RJB_Ctrl	069730			0610084		
RJB_ISHIFT_NAE	060708		0610069			0610173
Rr_clearence_harness	060709					
Sound_System_Harness	060643					
Sound_system_pwr_harness_NAE	idemX3_069296					
SpherosTimerHarness	idemX3_060557					
Starter_chassis_GND	idemX3_060307					
starter_relay_Melco_VOLVO	060711					
StarterBattery	060712					
SubWofferExtHarness	idemH3_066743					
TPMS_Lite_Adapter	NA	idem X3 0610073				
Trailer_Inputs_VEC_harness	060722					
Trailer_Outputs_VEC_harness	060723					
Trans_Fr_to_Rr_NAE	069911	0610018				
TransSensorWithoutRetarder_harness_NAE	idemX3_069778					
TransSensorWithRetarder_harness_NAE	idemX3_069777					
Urea_Harness_OBD13	060725	0610019				
USB_5V_Harness	IdemX3_060660					
USB_Ipod_harness	idemX3_901349					
WCL_IOE_Control	060726					
wcl_power_harness	060728					
Wcl Ricon Access	IdemCOM069744					
Wcl ricon lighting	061248					
WCL_RICON_Lighting_Jumper	069065					
WCL_Ricon_Window_Sw_Lh	idemX3_060310					
wcl_upperDoorControl	060751					
WclRiconSlidingDoor	069992					
wifi_system_gnd	idemX3_069925					
Win_Ajar_FJB	idemX3_060574					
Win_ajar_window_side_LH_NAE	060754					
Win_ajar_window_side_RH_NAE	060756					
Win_ajar_window_Ricon_RH_NAE	060757					

VEHICLE HARNESS ROADMAP

DESCRIPTION	Ref Only	Water preheter Sys	Surrounding camera	Aesys Destin. Signs (Minerva)	TGW2 AM-FM Antenna	Escape Hatches with Fan
ORDRE DE CHANGEMENT		**2018042**	**2018156**	**2017121**	**2019026**	**2019028**
VÉH. EFFECTIF	**Before 605**	**0655**	**0823**	**0823**	**0823**	**0823**
wiring revision	***Before 8***	**10**	**11**			
Harness (126)						
ABS_fr_wheel_harness_NAE	IdemX3_060124					
ACB_Gen2	060672					
Adaptor Phantom Feed - Radio Antenna	NA				**22480495**	
Adaptor Fakra to Motorola - Radio Antenna	NA				**901727**	
Antenna cable - AM/FM/DBA	NA				**901728**	
ailse_light_extension	idemX3_069424					
AirHorn_harness	idemX3_0610004					
Aisle_lights_harness_NAE	IdemX3_060086					
Alt_battery_LH	060682					
Alt_battery_NAE	060684					
Alt_chassis_GND	idemX3_060264					
Alt_Jumper_Power	idemX3_060265					
Alt_LH_chassis_GND	idemX3_069504					
Alternator_Ctrl_harness	idemX3_060088					
Alternator_Ctrl_LH_harness	idemX3_069511					
Batt_charger_120V_inlet	066226					
battery_12Vd_harness	060686					
battery_24Vd_harness	060691					
Battery__Cable	062371					
Battery_GND_Electro_harness	060693					
Battery_Gnd_Harness	063592_microstation					
Beru_antenna_NAE	idemX3_060143					
Beru_Fjb	idemX3_060045					
bloc resistor 620R wcl	060811					
booster_positive_Harness	060692					
Cablage__ASM	061180_JPEG					
Dash_NAE	060661		**0611102**			
Destination_Sign_Emergency_Sw124	NA			**IdemX3_069944**		
Destination_Sign_Front_To_Side	NA			**IdemX3_069941**		
Destination_Sign_Interconn_Side_Rear	NA			**IdemX3_069942**		
Destination_Sign_Interconnection	NA			**IdemX3_069940**		
Destination_Sign_Rear	NA			**IdemX3_069943**		
Docking Cornering Sw.	0610012/066613(SAV)					
Door_Harness	060670					
DPF_door_Harness	060744					
DPF_Door_light	060745					
DPF_Volvo_NAE	060746					
Driver_120VAC_Outlet	NA					
electric_horn_NAE	idemX3_060074					
Emergency_Lighting_LH_harness	idemX3_060091					
Emergency_Lighting_RH_harness	idemX3_060090					
Eng_Cradle_Allisson_NAE	069785					
Eng_Cradle_IShift_NAE	060747					
Engine_Acc_NAE	060667					
Engine_chassis_GND	IdemX3_060306					
ENGINE_DOOR	060748					
Engine_Block_Heater_Harness	NA					
equilizer_harness_Vanner	060855					
Evap_HARNESS_Ctrl	060804					
Evap_Power_GND_harness	idemX3_060527					
Evap_power_harness_	IdemX3_060529					
FanDrive_harness	IdemX3_068820					
FanDrive_pwr24	idemX3_069245					
FanDrive_pwrGnd	idemX3_069246					
FJB_2015	069910		**0611103**			
FJB_AFSS	idemX3_060042					
FJB_TransAlisson_OBD13	idemX3_069901					
FJB_TransIShift_OBD13	idemX3_060069					
Flame_Detector_Ext_Harness	061046					
Front_Clearance_Harness_NAE	060813					**069881-B**
Front_flip_screen_NAE	IdemX3_060099					
Front_Harness_NAE	060665		**0611104**			
Fuel_gauge_harness_NAE	idemX3_060087					
Hand_lever_retarder_harness_NAE	idemX3_060083					
IND_LED_FrLh_RrRh	idemX3_069544					
IND_LED_FrRh_RrLh	idemX3_069545					
Indiv_Headset_Radios_PWR	NA				**401420**	
Inter_Batt_cable	061036					
Interior_Light_access_NAE	060815					
INVerter_120Vac_LH	067608					
INVerter_120Vac_RH	067607					
Inverter driver display harness	0610039					

VEHICLE HARNESS ROADMAP

DESCRIPTION	Ref Only	Water preheter Sys	Surrounding camera	Enseignes Aesys (Minerva)	Nouvelle antenne AM-FM & TGW	Escape Hatches Fan Option régulière
ORDRE DE CHANGEMENT	**0**	**2018042**	**2018156**	**2017121**	**2019026**	**2019028**
VÉH. EFFECTIF	**Before 605**	**0655**	**0823**	**0823**	**0823**	**0823**
wiring revision	***Before 8***	**10**	**11**			
Harness (126)						
Inverter_harness	060818					
InverterJonctionNegatif	060819					
InverterJonctionNegatif2	061149					
InverterJonctionPositif	060019					
ISM_RELAY_Prack	NA		**0610200**			
JUMPER_120VAC_WCL	068937					
Jumper_Indirect_Std	idemX3_069546					
Jumper_Indirect_WCL	idemX3_069547					
Jumper_Y_120Vac	068221					
Lavatory_NAE	060833					
LH_CONSOLE_NAE	IdemX3_060544					
ENGINE_LINEAR_THERMAL_Harness	IdemX3_069738					
Linear_thermal_WO_afss	idemH3_069175					
Lugg_Harness_H341	0610010					
Lugg_Harness_NAE	060854					
Outlet_120vac_PRack X3_Seul	068295					
ParcelRackJB_NAE	060867					
Plug_for_2_sliding_seats	067984					
Plug_for_3_sliding_seats	068321					
Pneumatic_Plate_harness	060868					
Power_harness_NAE	060869					
Power_RH_Splitter_harness	060654					
Power_Steering_Ctrl_NAE	IdemX3_060378					
PowerVecr	060870					
PreHeater_relay	060872					
PreHeater_GND	idemX3_060308					
Preheater_Thermal_harness	idemX3_067676					
Preheater_ON_W_Batt_Charger	idemX3_060092					
Preheater_ON_W_HVAC	idemX3_060093					
ProHeat_Interface	idemX3_060228					
ProHeat_Timer_Harness	060016					
Proheat_To_RJB_harness	069728	0610115				
RadiatorChassisGnd	idemX3_069279					
Radiator door harness	061153					
Reading_Light_RH_Standard	060704					
Reading_Light_REAR_RH_Standard	061156					
readingLightHarness_LH	060706					
Rear_wheel_sub_harness	069729					
Relay_Melco_batt	idemX3_069542					
RJB_ALISSON_NAE	069912	0610172				
RJB_Ctrl	069730					
RJB_ISHIFT_NAE	060708	0610173				
Rr_clearence_harness	060709					
Roof_Haches_W_Fan	NA					**0611106**
Sound_System_Harness	060643		**0611105**			
Sound_system_pwr_harness_NAE	idemX3_069296					
SpherosTimerHarness	idemX3_060557					
Starter_chassis_GND	idemX3_060307					
starter_relay_Melco_VOLVO	060711					
StarterBattery	060712					
SubWofferExtHarness	idemH3_066743					
TPMS_Lite_Adapter	NA					
Trailer_Inputs_VEC_harness	060722					
Trailer_Outputs_VEC_harness	060723					
Trans_Fr_to_Rr_NAE	069911					
TransSensorWithoutRetarder_harness_NAE	idemX3_069778					
TransSensorWithRetarder_harness_NAE	idemX3_069777					
Urea_Harness_OBD13	060725					
USB_5V_Harness	IdemX3_060660					
USB_Ipod_harness	idemX3_901349					
WCL_IOE_Control	060726					
wcl_power_harness	060728					
Wcl Ricon Access	IdemCOM069744					
Wcl ricon lighting	061248					
WCL_RICON_Lighting_Jumper	069065					
WCL_Ricon_Window_Sw_Lh	idemX3_060310					
wcl_upperDoorControl	060751					
WclRiconSlidingDoor	069992					
wifi_system_gnd	idemX3_069925					
Win_Ajar_FJB	idemX3_060574					
Win_ajar_window_side_LH_NAE	060754					
Win_ajar_window_side_RH_NAE	060756					
Win_ajar_window_Ricon_RH_NAE	060757					

VEHICLE HARNESS ROADMAP

DESCRIPTION		UREE PWR
ORDRE DE CHANGEMENT		2020002
VÉH. EFFECTIF	Befor L-1055	L-1055
wiring revision	*13*	14
Harness (126)		
ABS_fr_wheel_harness_NAE	IdemX3_060124	
ACB_Gen2	060672	
Adaptor Phantom Feed - Radio Antenna	22480495	
Adaptor Fakra to Motorola - Radio Antenna	901727	
Antenna cable - AM/FM/DBA	901728	
ailse_light_extension	idemX3_069424	
AirHorn_harness	idemX3_0610004	
Aisle_lights_harness_NAE	IdemX3_060086	
Alt_battery_LH	060682	
Alt_battery_NAE	060684	
Alt_chassis_GND	idemX3_060264	
Alt_Jumper_Power	idemX3_060265	
Alt_LH_chassis_GND	idemX3_069504	
Alternator_Ctrl_harness	idemX3_060088	
Alternator_Ctrl_LH_harness	idemX3_069511	
Batt_charger_120V_inlet	066226	
battery_12Vd_harness	060686	
battery_24Vd_harness	060691	
Battery__Cable	062371	
Battery_GND_Electro_harness	060693	
Battery_Gnd_Harness	063592_microstation	
Beru_antenna_NAE	idemX3_0610143	
Beru_Fjb	idemX3_0610142	
bloc resistor 620R wcl	060811	
booster_positive_Harness	060692	
Cablage__ASM	061180_JPEG	
Dash_NAE	0610239	
Destination_Sign_Emergency_Sw124	IdemX3_069944	
Destination_Sign_Front_To_Side	IdemX3_069941	
Destination_Sign_Interconn_Side_Rear	IdemX3_069942	
Destination_Sign_Interconnection	IdemX3_069940	
Destination_Sign_Rear	IdemX3_069943	
Docking Cornering Sw.	0610012/066613(SAV)	
Door_Harness	060670	
DPF_door_Harness	060744	
DPF_Door_light	060745	
DPF_Volvo_NAE	060746	
Driver_120VAC_Outlet	0610152	
electric_horn_NAE	idemX3_060074	
Emergency_Lighting_LH_harness	idemX3_060091	
Emergency_Lighting_RH_harness	idemX3_060090	
Eng_Cradle_Allisson_NAE	069785	
Eng_Cradle_IShift_NAE	060747	
Engine_Acc_NAE	0610014	
Engine_chassis_GND	IdemX3_060306	
ENGINE_DOOR	060748	
Engine_Block_Heater_Harness	Idem X3_0610126	
equilizer_harness_Vanner	060855	
Evap_HARNESS_Ctrl	060804	
Evap_Power_GND_harness	idemX3_060527	
Evap_power_harness_	IdemX3_060529	
FanDrive_harness	IdemX3_068820	
FanDrive_pwr24	idemX3_069245	
FanDrive_pwrGnd	idemX3_069246	
FJB_2015	0610231	
FJB_AFSS	idemX3_060042	
FJB_TransAlisson_OBD13	IdemX3_0610096	
FJB_TranslShift_OBD13	idemX3_060069	
Flame_Detector_Ext_Harness	061046	
Front_Clearance_Harness_NAE	069881	
Front_flip_screen_NAE	IdemX3_060099	
Front_Harness_NAE	0610232	
Fuel_gauge_harness_NAE	idemX3_060087	
Hand_lever_retarder_harness_NAE	idemX3_060083	
IND_LED_FrLh_RrRh	idemX3_069544	
IND_LED_FrRh_RrLh	idemX3_069545	
Indiv_Headset_Radios_PWR	401420	
Inter_Batt_cable	061036	
Interior_Light_access_NAE	0610105	
INVerter_120Vac_LH	067608	
INVerter_120Vac_RH	067607	
Inverter driver display harness	0610039	

VEHICLE HARNESS ROADMAP

DESCRIPTION		UREE PWR
ORDRE DE CHANGEMENT		2020002
VÉH. EFFECTIF	Befor L-1055	L-1055
wiring revision	*13*	14
Inverter_harness	060818	
InverterJonctionNegatif	060819	
InverterJonctionNegatif2	061149	
InverterJonctionPositif	060019	
ISM_RELAY_Prack	0610200	
JUMPER_120VAC_WCL	068937	
Jumper_Indirect_Std	idemX3_069546	
Jumper_Indirect_WCL	idemX3_069547	
Jumper_Y_120Vac	068221	
Lavatory_NAE	060833	
LH_CONSOLE_NAE	IdemX3_060544	
ENGINE_LINEAR_THERMAL_Harness	0610154	
Linear_thermal_WO_afss	idemH3_069175	
Lugg_Harness_H341	0610010	
Lugg_Harness_NAE	060854	
Outlet_120vac_PRack X3_Seul	068295	
ParcelRackJB_NAE	0610106	
Plug_for_2_sliding_seats	067984	
Plug_for_3_sliding_seats	068321	
Pneumatic_Plate_harness	060868	
Power_harness_NAE	060869	
Power_RH_Splitter_harness	060654	
Power_Steering_Ctrl_NAE	IdemX3_060378	
PowerVecr	060870	
PreHeater_relay	060872	
PreHeater_GND	idemX3_060308	
Preheater_Thermal_harness	idemX3_067676	
Preheater_ON_W_Batt_Charger	idemX3_060092	
Preheater_ON_W_HVAC	idemX3_060093	
ProHeat_Interface	idemX3_060228	
ProHeat_Timer_Harness	060016	
Proheat_To_RJB_harness	0610115	
RadiatorChassisGnd	idemX3_069279	
Radiator door harness	061153	
Reading_Light_RH_Standard	060704	
Reading_Light_REAR_RH_Standard	0610198	
readingLightHarness_LH	0610113	
Rear_wheel_sub_harness	069729	
Relay_Melco_batt	idemX3_069542	
RJB_ALISSON_NAE	0610172	0610282
RJB_Ctrl	0610084	0611007
RJB_ISHIFT_NAE	0610173	0610283
Rr_clearence_harness	060709	
Roof_Haches_W_Fan	0611106	
Sound_System_Harness	0611105	
Sound_system_pwr_harness_NAE	idemX3_069296	
SpherosTimerHarness	idemX3_060557	
Starter_chassis_GND	idemX3_060307	
starter_relay_Melco_VOLVO	060711	
StarterBattery	060712	
SubWofferExtHarness	idemH3_066743	
TPMS_Lite_Adapter	NA	
Trailer_Inputs_VEC_harness	060722	
Trailer_Outputs_VEC_harness	060723	
Trans_Fr_to_Rr_H345	0610018	0610280
Trans_Fr_to_Rr_H341	0610098	0610281
TransSensorWithoutRetarder_harness_NAE	idemX3_069778	
TransSensorWithRetarder_harness_NAE	idemX3_069777	
Urea_Harness_OBD13	0610019	0611008
USB_5V_Harness	IdemX3_060660	
USB_Ipod_harness	idemX3_901349	
WCL_IOE_Control	060726	
wcl_power_harness	060728	
Wcl Ricon Access	IdemCOM069744	
Wcl ricon lighting	061248	
WCL_RICON_Lighting_Jumper	069065	
WCL_Ricon_Window_Sw_Lh	idemX3_060310	
wcl_upperDoorControl	060751	
WclRiconSlidingDoor	069992	
wifi_system_gnd	idemX3_069925	
Win_Ajar_FJB	idemX3_060574	
Win_ajar_window_side_LH_NAE	060754	
Win_ajar_window_side_RH_NAE	060756	
Win_ajar_window_Ricon_RH_NAE	060757	

VEHICLE HARNESS ROADMAP

DESCRIPTION	UREE PWR	Driver Assist
ORDRE DE CHANGEMENT	2020002	2019037
VÉH. EFFECTIF	L-1055	L-1138
wiring revision	14	15
Harness (126)		
ABS_fr_wheel_harness_NAE	IdemX3_060124	
ACB_Gen2	060672	0610245
Adaptor Phantom Feed - Radio Antenna	22480495	
Adaptor Fakra to Motorola - Radio Antenna	901727	
Antenna cable - AM/FM/DBA	901728	
ailse_light_extension	idemX3_069424	
AirHorn_harness	idemX3_0610004	
Aisle_lights_harness_NAE	IdemX3_060086	
Alt_battery_LH	060682	
Alt_battery_NAE	060684	
Alt_chassis_GND	idemX3_060264	
Alt_Jumper_Power	idemX3_060265	
Alt_LH_chassis_GND	idemX3_069504	
Alternator_Ctrl_harness	idemX3_060088	
Alternator_Ctrl_LH_harness	idemX3_069511	
Batt_charger_120V_inlet	066226	
battery_12Vd_harness	060686	
battery_24Vd_harness	060691	
Battery__Cable	062371	
Battery_GND_Electro_harness	060693	
Battery_Gnd_Harness	063592_microstation	
Beru_antenna_NAE	idemX3_0610143	
Beru_Fjb	idemX3_0610142	
bloc resistor 620R wcl	060811	
booster_positive_Harness	060692	
Cablage__ASM	061180_JPEG	
Dash_NAE	0610239	0610242
Destination_Sign_Emergency_Sw124	IdemX3_069944	
Destination_Sign_Front_To_Side	IdemX3_069941	
Destination_Sign_Interconn_Side_Rear	IdemX3_069942	
Destination_Sign_Interconnection	IdemX3_069940	
Destination_Sign_Rear	IdemX3_069943	
Docking Cornering Sw.	0610012/066613(SAV)	
Door_Harness	060670	
DPF_door_Harness	060744	
DPF_Door_light	060745	
DPF_Volvo_NAE	060746	
Driver_120VAC_Outlet	0610152	
electric_horn_NAE	idemX3_060074	
Emergency_Lighting_LH_harness	idemX3_060091	
Emergency_Lighting_RH_harness	idemX3_060090	
Eng_Cradle_Allisson_NAE	069785	
Eng_Cradle_IShift_NAE	060747	
Engine_Acc_NAE	0610014	
Engine_chassis_GND	IdemX3_060306	
ENGINE_DOOR	060748	
Engine_Block_Heater_Harness	Idem X3_0610126	
equilizer_harness_Vanner	060855	
Evap_HARNESS_Ctrl	060804	
Evap_Power_GND_harness	idemX3_060527	
Evap_power_harness_	IdemX3_060529	
FanDrive_harness	IdemX3_068820	
FanDrive_pwr24	idemX3_069245	
FanDrive_pwrGnd	idemX3_069246	
FJB_2015	0610231	0610243
FJB_AFSS	idemX3_060042	
FJB_TransAlisson_OBD13	IdemX3_0610096	
FJB_TransIShift_OBD13	idemX3_060069	
Flame_Detector_Ext_Harness	061046	
Front_Clearance_Harness_NAE	069881	
Front_flip_screen_NAE	IdemX3_060099	
Front_Harness_NAE	0610232	0610244
Fuel_gauge_harness_NAE	idemX3_060087	
Hand_lever_retarder_harness_NAE	idemX3_060083	
IND_LED_FrLh_RrRh	idemX3_069544	
IND_LED_FrRh_RrLh	idemX3_069545	
Indiv_Headset_Radios_PWR	401420	
Inter_Batt_cable	061036	
Interior_Light_access_NAE	0610105	
INVerter_120Vac_LH	067608	
INVerter_120Vac_RH	067607	
Inverter driver display harness	0610039	

VEHICLE HARNESS ROADMAP

DESCRIPTION	UREE PWR	Driver Assist
ORDRE DE CHANGEMENT	2020002	2019037
VÉH. EFFECTIF	L-1055	L-1138
wiring revision	14	15
Inverter_harness	060818	
InverterJonctionNegatif	060819	
InverterJonctionNegatif2	061149	
InverterJonctionPositif	060019	
ISM_RELAY_Prack	0610200	
JUMPER_120VAC_WCL	068937	
Jumper_Indirect_Std	idemX3_069546	
Jumper_Indirect_WCL	idemX3_069547	
Jumper_Y_120Vac	068221	
Lavatory_NAE	060833	
LH_CONSOLE_NAE	IdemX3_060544	
ENGINE_LINEAR_THERMAL_Harness	0610154	
Linear_thermal_WO_afss	idemH3_069175	
Lugg_Harness_H341	0610010	
Lugg_Harness_NAE	060854	
Outlet_120vac_PRack X3_Seul	068295	
ParcelRackJB_NAE	0610106	
Plug_for_2_sliding_seats	067984	
Plug_for_3_sliding_seats	068321	
Pneumatic_Plate_harness	060868	
Power_harness_NAE	060869	
Power_RH_Splitter_harness	060654	
Power_Steering_Ctrl_NAE	IdemX3_060378	
PowerVecr	060870	
PreHeater_relay	060872	
PreHeater_GND	idemX3_060308	
Preheater_Thermal_harness	idemX3_067676	
Preheater_ON_W_Batt_Charger	idemX3_060092	
Preheater_ON_W_HVAC	idemX3_060093	
ProHeat_Interface	idemX3_060228	
ProHeat_Timer_Harness	060016	
Proheat_To_RJB_harness	0610115	
RadiatorChassisGnd	idemX3_069279	
Radiator door harness	061153	
Reading_Light_RH_Standard	060704	
Reading_Light_REAR_RH_Standard	0610198	
readingLightHarness_LH	0610113	
Rear_wheel_sub_harness	069729	
Relay_Melco_batt	idemX3_069542	
RJB_ALISSON_NAE	0610282	
RJB_Ctrl	0611007	
RJB_ISHIFT_NAE	0610283	
Rr_clearence_harness	060709	
Roof_Haches_W_Fan	0611106	
Sound_System_Harness	0611105	
Sound_system_pwr_harness_NAE	idemX3_069296	
SpherosTimerHarness	idemX3_060557	
Starter_chassis_GND	idemX3_060307	
starter_relay_Melco_VOLVO	060711	
StarterBattery	060712	
SubWofferExtHarness	idemH3_066743	
TPMS_Lite_Adapter	NA	
Trailer_Inputs_VEC_harness	060722	
Trailer_Outputs_VEC_harness	060723	
Trans_Fr_to_Rr_H345	0610280	
Trans_Fr_to_Rr_H341	0610281	
TransSensorWithoutRetarder_harness_NAE	idemX3_069778	
TransSensorWithRetarder_harness_NAE	idemX3_069777	
Urea_Harness_OBD13	0611008	
USB_5V_Harness	IdemX3_060660	
USB_Ipod_harness	idemX3_901349	
WCL_IOE_Control	060726	
wcl_power_harness	060728	
Wcl Ricon Access	IdemCOM069744	
Wcl ricon lighting	061248	
WCL_RICON_Lighting_Jumper	069065	
WCL_Ricon_Window_Sw_Lh	idemX3_060310	
wcl_upperDoorControl	060751	
WclRiconSlidingDoor	069992	
wifi_system_gnd	idemX3_069925	
Win_Ajar_FJB	idemX3_060574	
Win_ajar_window_side_LH_NAE	060754	
Win_ajar_window_side_RH_NAE	060756	
Win_ajar_window_Ricon_RH_NAE	060757	

VEHICLE HARNESS ROADMAP

DESCRIPTION	Driver Assist	OBD21
ORDRE DE CHANGEMENT	2019037	2021001
VÉH. EFFECTIF	L-1138	
wiring revision	15	16
Harness (126)		
ABS_fr_wheel_harness_NAE	IdemX3_060124	
ACB_Gen2	0610245	
Adaptor Phantom Feed - Radio Antenna	22480495	
Adaptor Fakra to Motorola - Radio Antenna	901727	
Antenna cable - AM/FM/DBA	901728	
ailse_light_extension	idemX3_069424	
AirHorn_harness	idemX3_0610004	
Aisle_lights_harness_NAE	IdemX3_060086	
Alt_battery_LH	060682	
Alt_battery_NAE	060684	
Alt_chassis_GND	idemX3_060264	
Alt_Jumper_Power	idemX3_060265	
Alt_LH_chassis_GND	idemX3_069504	
Alternator_Ctrl_harness	idemX3_060088	
Alternator_Ctrl_LH_harness	idemX3_069511	
Batt_charger_120V_inlet	066226	
battery_12Vd_harness	060686	
battery_24Vd_harness	060691	
Battery__Cable	062371	
Battery_GND_Electro_harness	060693	
Battery_Gnd_Harness	063592_microstation	
Beru_antenna_NAE	idemX3_0610143	
Beru_Fjb	idemX3_0610142	
bloc resistor 620R wcl	060811	
booster_positive_Harness	060692	
Cablage__ASM	061180_JPEG	
Dash_NAE	0610242	0610488
Destination_Sign_Emergency_Sw124	IdemX3_069944	
Destination_Sign_Front_To_Side	IdemX3_069941	
Destination_Sign_Interconn_Side_Rear	IdemX3_069942	
Destination_Sign_Interconnection	IdemX3_069940	
Destination_Sign_Rear	IdemX3_069943	
Docking Cornering Sw.	0610012/066613(SAV)	
Door_Harness	060670	
DPF_door_Harness	060744	
DPF_Door_light	060745	
DPF_Volvo_NAE	060746	
Driver_120VAC_Outlet	0610152	
electric_horn_NAE	idemX3_060074	
Emergency_Lighting_LH_harness	idemX3_060091	
Emergency_Lighting_RH_harness	idemX3_060090	
Eng_Cradle_Allisson_NAE	069785	
Eng_Cradle_IShift_NAE	060747	
Engine_Acc_NAE	0610014	
Engine_chassis_GND	IdemX3_060306	
ENGINE_DOOR	060748	
Engine_Block_Heater_Harness	Idem X3_0610126	
equilizer_harness_Vanner	060855	
Evap_HARNESS_Ctrl	060804	
Evap_Power_GND_harness	idemX3_060527	
Evap_power_harness_	IdemX3_060529	
FanDrive_harness	IdemX3_068820	
FanDrive_pwr24	idemX3_069245	
FanDrive_pwrGnd	idemX3_069246	
FJB_2015	0610243	0610460
FJB_AFSS	idemX3_060042	
FJB_TransAlisson_OBD13	IdemX3_0610096	
FJB_TranslShift_OBD13	idemX3_060069	
Flame_Detector_Ext_Harness	061046	
Front_Clearance_Harness_NAE	069881	
Front_flip_screen_NAE	IdemX3_060099	
Front_Harness_NAE	0610244	0610489
Fuel_gauge_harness_NAE	idemX3_060087	
Hand_lever_retarder_harness_NAE	idemX3_060083	
IND_LED_FrLh_RrRh	idemX3_069544	
IND_LED_FrRh_RrLh	idemX3_069545	
Indiv_Headset_Radios_PWR	401420	
Inter_Batt_cable	061036	
Interior_Light_access_NAE	0610105	
INVerter_120Vac_LH	067608	
INVerter_120Vac_RH	067607	
Inverter driver display harness	0610039	

VEHICLE HARNESS ROADMAP

DESCRIPTION	Driver Assist	OBD21
ORDRE DE CHANGEMENT	2019037	2021001
VÉH. EFFECTIF	L-1138	
wiring revision	15	16
Inverter_harness	060818	
InverterJonctionNegatif	060819	
InverterJonctionNegatif2	061149	
InverterJonctionPositif	060019	
ISM_RELAY_Prack	0610200	
JUMPER_120VAC_WCL	068937	
Jumper_Indirect_Std	idemX3_069546	
Jumper_Indirect_WCL	idemX3_069547	
Jumper_Y_120Vac	068221	
Lavatory_NAE	060833	
LH_CONSOLE_NAE	IdemX3_060544	IDEMX30610411
ENGINE_LINEAR_THERMAL_Harness	0610154	
Linear_thermal_WO_afss	idemH3_069175	
Lugg_Harness_H341	0610010	
Lugg_Harness_NAE	060854	
Outlet_120vac_PRack X3_Seul	068295	
ParcelRackJB_NAE	0610106	
Plug_for_2_sliding_seats	067984	
Plug_for_3_sliding_seats	068321	
Pneumatic_Plate_harness	060868	0610469
Power_harness_NAE	060869	
Power_RH_Splitter_harness	060654	
Power_Steering_Ctrl_NAE	IdemX3_060378	
PowerVecr	060870	
PreHeater_relay	060872	
PreHeater_GND	idemX3_060308	
Preheater_Thermal_harness	idemX3_067676	
Preheater_ON_W_Batt_Charger	idemX3_060092	
Preheater_ON_W_HVAC	idemX3_060093	
ProHeat_Interface	idemX3_060228	
ProHeat_Timer_Harness	060016	
Proheat_To_RJB_harness	0610115	
RadiatorChassisGnd	idemX3_069279	
Radiator door harness	061153	
Reading_Light_RH_Standard	060704	
Reading_Light_REAR_RH_Standard	0610198	
readingLightHarness_LH	0610113	
Rear_wheel_sub_harness	069729	
Relay_Melco_batt	idemX3_069542	
RJB_ALISSON_NAE	0610282	0610491
RJB_Ctrl	0611007	0610453
RJB_ISHIFT_NAE	0610283	0610492
Rr_clearence_harness	060709	
Roof_Haches_W_Fan	0611106	
Sound_System_Harness	0611105	0610513
Sound_system_pwr_harness_NAE	idemX3_069296	
SpherosTimerHarness	idemX3_060557	
Starter_chassis_GND	idemX3_060307	
starter_relay_Melco_VOLVO	060711	
StarterBattery	060712	
SubWofferExtHarness	idemH3_066743	
TPMS_Lite_Adapter	NA	
Trailer_Inputs_VEC_harness	060722	
Trailer_Outputs_VEC_harness	060723	
Trans_Fr_to_Rr_H345	0610280	0610493
Trans_Fr_to_Rr_H341	0610281	0610494
TransSensorWithoutRetarder_harness_NAE	idemX3_069778	
TransSensorWithRetarder_harness_NAE	idemX3_069777	
Urea_Harness_OBD13	0611008	
USB_5V_Harness	IdemX3_060660	
USB_Ipod_harness	idemX3_901349	
WCL_IOE_Control	060726	
wcl_power_harness	060728	
Wcl Ricon Access	IdemCOM069744	
Wcl ricon lighting	061248	
WCL_RICON_Lighting_Jumper	069065	
WCL_Ricon_Window_Sw_Lh	idemX3_060310	
wcl_upperDoorControl	060751	
WclRiconSlidingDoor	069992	
wifi_system_gnd	idemX3_069925	
Win_Ajar_FJB	idemX3_060574	
Win_ajar_window_side_LH_NAE	060754	
Win_ajar_window_side_RH_NAE	060756	
Win_ajar_window_Ricon_RH_NAE	060757	

VEHICLE HARNESS ROADMAP

DESCRIPTION	OBD21	OBD22
ORDRE DE CHANGEMENT	2021001	2022001
VÉH. EFFECTIF		
wiring revision	16	20
Harness (126)		
ABS_fr_wheel_harness_NAE	IdemX3_060124	
ACB_Gen2	0610245	
Adaptor Phantom Feed - Radio Antenna	22480495	
Adaptor Fakra to Motorola - Radio Antenna	901727	
Antenna cable - AM/FM/DBA	901728	
ailse_light_extension	idemX3_069424	
AirHorn_harness	idemX3_0610004	
Aisle_lights_harness_NAE	IdemX3_060086	
Alt_battery_LH	060682	
Alt_battery_NAE	060684	
Alt_chassis_GND	idemX3_060264	
Alt_Jumper_Power	idemX3_060265	
Alt_LH_chassis_GND	idemX3_069504	
Alternator_Ctrl_harness	idemX3_060088	
Alternator_Ctrl_LH_harness	idemX3_069511	
Batt_charger_120V_inlet	066226	
battery_12Vd_harness	060686	
battery_24Vd_harness	060691	
Battery__Cable	062371	
Battery_GND_Electro_harness	060693	
Battery_Gnd_Harness	063592_microstation	
Beru_antenna_NAE	idemX3_0610143	
Beru_Fjb	idemX3_0610142	
bloc resistor 620R wcl	060811	
booster_positive_Harness	060692	
Cablage__ASM	061180_JPEG	
Dash_NAE	0610583	
Destination_Sign_Emergency_Sw124	IdemX3_069944	
Destination_Sign_Front_To_Side	IdemX3_069941	
Destination_Sign_Interconn_Side_Rear	IdemX3_069942	
Destination_Sign_Interconnection	IdemX3_069940	
Destination_Sign_Rear	IdemX3_069943	
Docking Cornering Sw.	0610012/066613(SAV)	
Door_Harness	060670	
DPF_door_Harness	060744	
DPF_Door_light	060745	
DPF_Volvo_NAE	060746	
Driver_120VAC_Outlet	0610152	
electric_horn_NAE	idemX3_060074	
Emergency_Lighting_LH_harness	idemX3_060091	
Emergency_Lighting_RH_harness	idemX3_060090	
Eng_Cradle_Allisson_NAE	069785	
Eng_Cradle_IShift_NAE	060747	
Engine_Acc_NAE	0610014	
Engine_chassis_GND	IdemX3_060306	
ENGINE_DOOR	060748	
Engine_Block_Heater_Harness	Idem X3_0610126	
equilizer_harness_Vanner	060855	
Evap_HARNESS_Ctrl	060804	
Evap_Power_GND_harness	idemX3_060527	
Evap_power_harness_	IdemX3_060529	
FanDrive_harness	IdemX3_068820	
FanDrive_pwr24	idemX3_069245	
FanDrive_pwrGnd	idemX3_069246	
FJB_2015	0610460	
FJB_AFSS	idemX3_060042	
FJB_TransAlisson_OBD13	IdemX3_0610096	
FJB_TranslShift_OBD13	idemX3_060069	
Flame_Detector_Ext_Harness	061046	
Front_Clearance_Harness_NAE	069881	
Front_flip_screen_NAE	IdemX3_060099	
Front_Harness_NAE	0610489	
Fuel_gauge_harness_NAE	idemX3_060087	
Hand_lever_retarder_harness_NAE	idemX3_060083	
IND_LED_FrLh_RrRh	idemX3_069544	
IND_LED_FrRh_RrLh	idemX3_069545	
Indiv_Headset_Radios_PWR	401420	
Inter_Batt_cable	061036	
Interior_Light_access_NAE	0610105	
INVerter_120Vac_LH	067608	
INVerter_120Vac_RH	067607	
Inverter driver display harness	0610039	

VEHICLE HARNESS ROADMAP

DESCRIPTION	OBD21	OBD22
ORDRE DE CHANGEMENT	2021001	2022001
VÉH. EFFECTIF		
wiring revision	16	20
Inverter_harness	060818	
InverterJonctionNegatif	060819	
InverterJonctionNegatif2	061149	
InverterJonctionPositif	060019	
ISM_RELAY_Prack	0610200	
JUMPER_120VAC_WCL	068937	
Jumper_Indirect_Std	idemX3_069546	
Jumper_Indirect_WCL	idemX3_069547	
Jumper_Y_120Vac	068221	
Lavatory_NAE	060833	
LH_CONSOLE_NAE	IDEMX30610411	
ENGINE_LINEAR_THERMAL_Harness	0610154	
Linear_thermal_WO_afss	idemH3_069175	
Lugg_Harness_H341	0610010	
Lugg_Harness_NAE	060854	
Outlet_120vac_PRack X3_Seul	068295	
ParcelRackJB_NAE	0610106	
Plug_for_2_sliding_seats	067984	
Plug_for_3_sliding_seats	068321	
Pneumatic_Plate_harness	0610469	
Power_harness_NAE	060869	
Power_RH_Splitter_harness	060654	
Power_Steering_Ctrl_NAE	IdemX3_060378	
PowerVecr	060870	
PreHeater_relay	060872	
PreHeater_GND	idemX3_060308	
Preheater_Thermal_harness	idemX3_067676	
Preheater_ON_W_Batt_Charger	idemX3_060092	
Preheater_ON_W_HVAC	idemX3_060093	
ProHeat_Interface	idemX3_060228	
ProHeat_Timer_Harness	060016	
Proheat_To_RJB_harness	0610115	
RadiatorChassisGnd	idemX3_069279	
Radiator door harness	061153	
Reading_Light_RH_Standard	060704	
Reading_Light_REAR_RH_Standard	0610198	
readingLightHarness_LH	0610113	
Rear_wheel_sub_harness	069729	
Relay_Melco_batt	idemX3_069542	
RJB_ALISSON_NAE	0610491	
RJB_Ctrl	0610453	
RJB_ISHIFT_NAE	0610492	
Rr_clearence_harness	060709	
Roof_Haches_W_Fan	0611106	
Sound_System_Harness	0610513	
Sound_system_pwr_harness_NAE	idemX3_069296	
SpherosTimerHarness	idemX3_060557	
Starter_chassis_GND	idemX3_060307	
starter_relay_Melco_VOLVO	060711	
StarterBattery	060712	
SubWofferExtHarness	idemH3_066743	
TPMS_Lite_Adapter	NA	
Trailer_Inputs_VEC_harness	060722	
Trailer_Outputs_VEC_harness	060723	
Trans_Fr_to_Rr_H345	0610551	
Trans_Fr_to_Rr_H341	0610552	
TransSensorWithoutRetarder_harness	idemX3_069778	IDEMX3_0610588
TransSensorWithRetarder_harness	idemX3_069777	IDEMX3_0610586
Urea_Harness_OBD13	0611008	0610590
USB_5V_Harness	IdemX3_060660	
USB_Ipod_harness	idemX3_901349	
WCL_IOE_Control	060726	
wcl_power_harness	060728	
Wcl Ricon Access	IdemCOM069744	
Wcl ricon lighting	061248	
WCL_RICON_Lighting_Jumper	069065	
WCL_Ricon_Window_Sw_Lh	idemX3_060310	
wcl_upperDoorControl	060751	
WclRiconSlidingDoor	069992	
wifi_system_gnd	idemX3_069925	
Win_Ajar_FJB	idemX3_060574	
Win_ajar_window_side_LH_NAE	060754	
Win_ajar_window_side_RH_NAE	060756	
Win_ajar_window_Ricon_RH_NAE	060757	

Wiring diagram pages list

Pin configuration MCM

Signal ID	J1 pin	Interface type	Input / Output	Description
A1	1	CAN0 High	Bus	Maximum speed 1Mbps/wake
A2	2	CAN0 Low	Bus	Maximum speed 1Mbps/wake
A3	3	Type 7	Out	LDO, Failure mode
A4	4	Type 7	Out	LDO
A5	5	Type 7	Out	LDO
A6	6	Type 8	Out	LDO
A7	7	Type 8	Out	LDO
A8	8	GND	In	
A9	9	Vbat	In	
A10	10	Type 8	Out	LDO
A11	11	Type 10	Out	HDO
A12	12	Type 9B	Out	HDO
A13	13	Type 9B	Out	HDO
A14	14	Type 9A	Out	HDO
A15	15	Type 9A	Out	HDO
A16	16	Type 9A	Out	HDO, Failure mode
A17	17	Type 10	Out	HDO, Failure mode
A18	18	Type 9A	Out	HDO
A19	19	Type 13	Out	HDO
A20	20	Network ID 1	In	
A21	21	Network ID 2	In	
A22	22	EOL enable	In	
A23	23	Network ID 3	In	
A24	24	Type 11	Out	HLDO
A25	25	Type 11	Out	HLDO
A26	26	Type 5	In	HDI
A27	27	CAN2 High	Bus	Maximum speed 1Mbps/wake
A28	28	CAN2 Low	Bus	Maximum speed 1Mbps/wake
A29	29	GND	In	
A30	30	Vbat	In	

Signal ID	J1 pin	Interface type	Input / Output	Description
B1	1	Type 1	In	LDI, HDI
B2	2	Type 1	In	LDI, HDI, Failure mode
B3	3	Type 2	In	HDI
B4	4	Type 4a	In	HDI, Interrupt/Wake
B5	5	Type 3	In	LDI, Interrupt/Wake
B6	6	Type 4a	In	HDI Failure mode, Interrupt/Wake
B7	7	RS232 TxD	Bus	Maximum speed 115,2kbps
B8	8	RS232 RxD	Bus	Maximum speed 115,2kbps
B9	9	Type 1	In	LDI, HDI
B10	10	Type 1	In	LDI, HDI
B11	11	Type 1	In	LDI, HDI
B12	12	RS232 GND	In	
B13	13	Type 1	In	LDI, HDI
B14	14	Type 1	In	LDI, HDI
B15	15	Type 4B	In	Interrupt/Wake
B16	16	Type 1	In	LDI, HDI
B17	17	Type 1	In	LDI, HDI
B18	18	GND	In	
B19	19	MasterID Supply	In	
B20	20	NC		
B21	21	Type 1	In	LDI, HDI
B22	22	Type 1	In	LDI, HDI
B23	23	Type 1	In	LDI, HDI
B24	24	RS232 CTS	In	
B25	25	Type 6	In	HAI
B26	26	Type 6	In	HAI
B27	27	RS232 RTS	Out	
B28	28	Type 12	Out	HDO 5V
B29	29	Type 9	Out	HDO
B30	30	NC		

Wiring diagram pages list

Pin configuration MCM

Interface Circuit type 1, General purpose digital input

The input can be used as a general input circuit interfacing to switches closing to ground and to battery (LDI/HDI). It can also be used to interface with resistive switches and sensors.

DC model of this circuit:

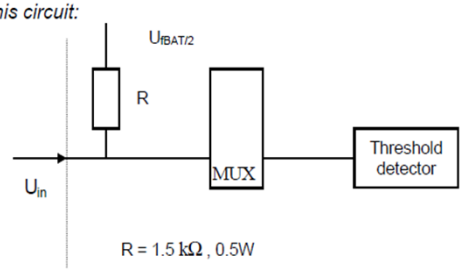

Input circuit type 2, High side digital input

DC model of input circuit type 2. The input is used to interface with switches closing to battery voltage (HDI).

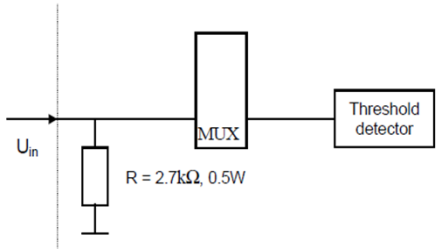

Input circuit type 3, Low side digital input, interrupt

DC model of input circuit type 3. The input is used to interface with switches closing to ground voltage (LDI).

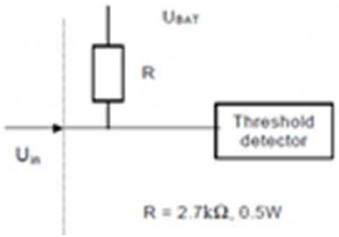

Input circuit type 4a, High side digital input, interrupt

DC model of input circuit type 4. The input is used to interface with switches closing to battery voltage (HDI)

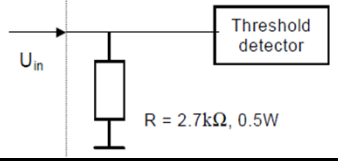

Input circuit type 4b, High side digital input, interrupt

The input is used to wake up the CECM from sleep mode.

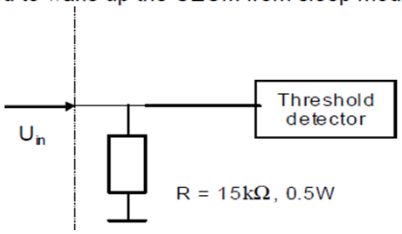

Input circuit type 5, High side digital input

DC model of input circuit type 5. the inputs is used to interface with switches closing to battery voltage

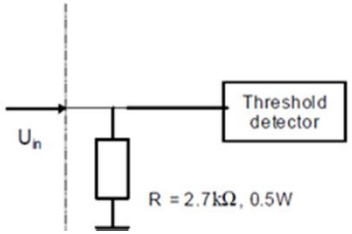

Wiring diagram pages list

Pin configuration MCM

Input circuit type 6, Analogue input

The circuit is used as interface to variable voltage sources such as potentiometers and analogue sensors (HAI).
DC model of input circuit type 6:

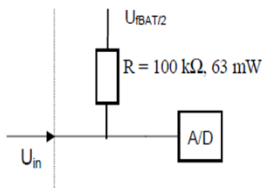

Output circuit type 7, LDO.

The figure below gives a schematic overview of the output type 7.

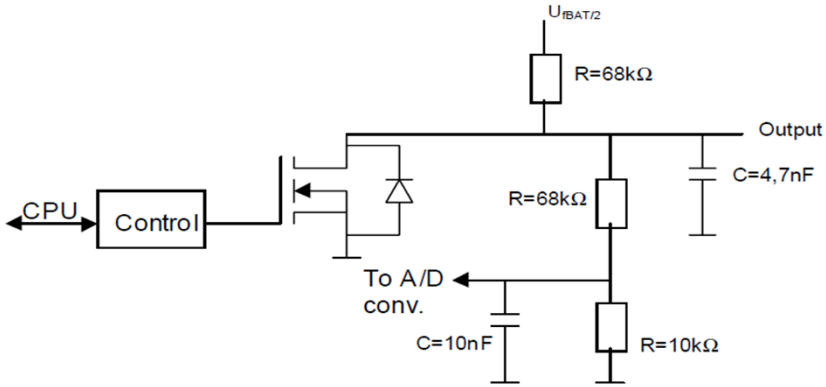

Output circuit type 8, LDO.

The figure below gives a schematic overview of the output type 8.

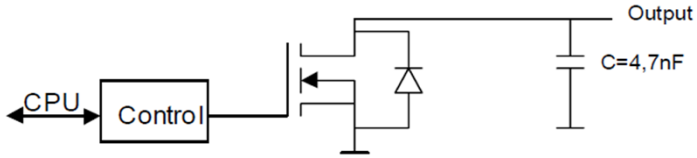

Output circuit type 9 a/b, HDO.

The figure below gives a schematic overview of the output type 9 a/b.

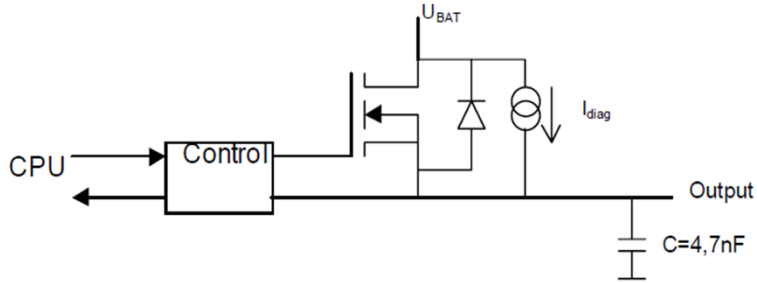

Output circuit type 10, HDO.

The figure below gives a schematic overview of the output type 10.

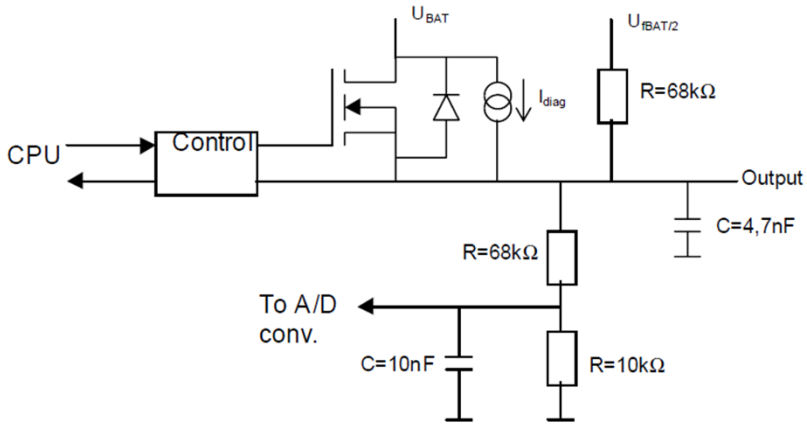

Wiring diagram pages list

Pin configuration MCM

Output circuit type 11, L/HDO, PWM_{out}.

The figure below gives a schematic overview of the output type 11.

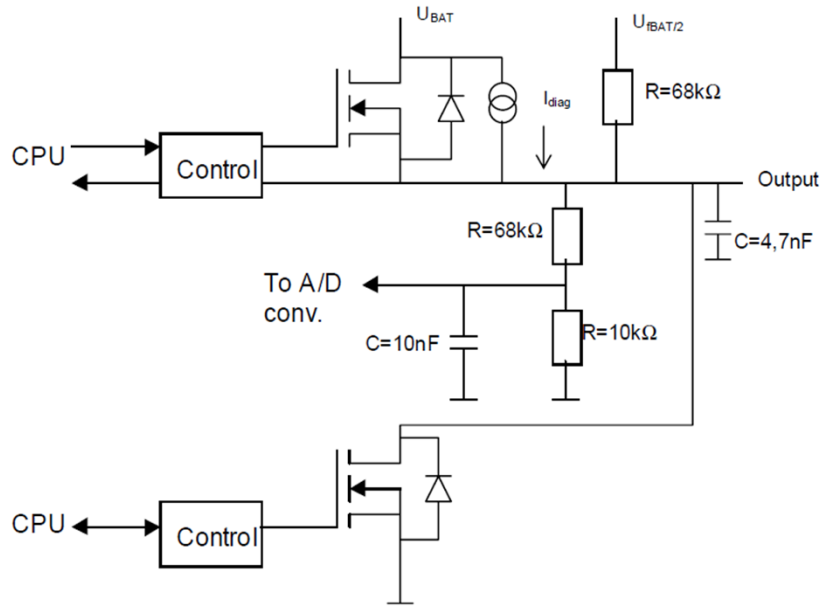

Output circuit type 12, HDO, 5V output and type 13, HDO.

The figure below gives a schematic overview of the output type 12 and 13.

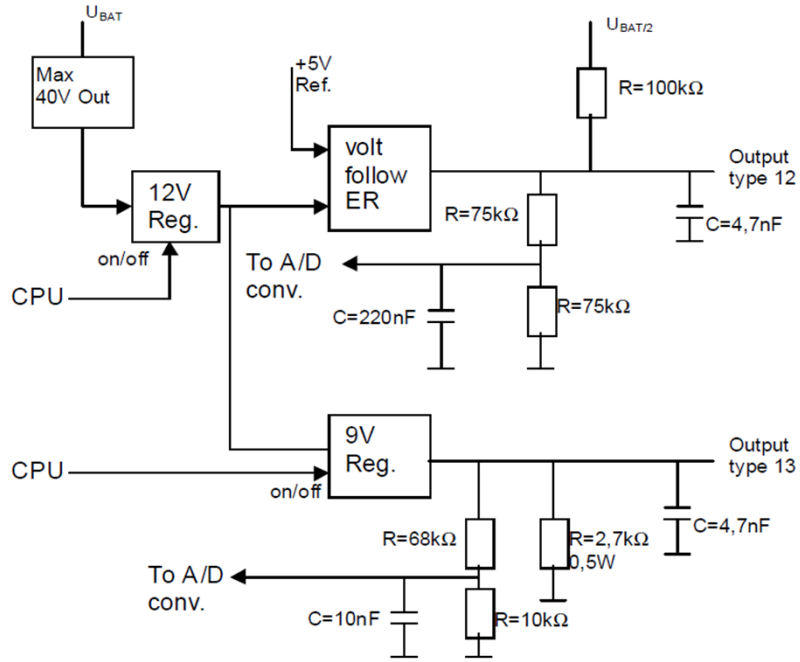

Wiring diagram pages list

Pin configuration I/O-A+

Signal ID	J1 pin	Interface type	Input / Output	Description	Max current average	Max current peak
J1-1	1	4c	Out	HDO, LDO, HLDO, HPO	1A	1A
J1-2	2	1a, 1b, 1c	In	HDI, LDI, HLDI, RES, RES32K, AI5V, RAI, CNTR1, CNTR2	*	*
J1-3	3	4c	Out	HDO, LDO, HLDO, HPO	1A	1A
J1-4	4	4c	Out	HDO, LDO, HLDO, HPO	1A	1A
J1-5	5	1a, 1b, 1c	In	HDI, LDI, HLDI, RES, RES32K, AI5V, RAI, CNTR1, CNTR2	*	*
J1-6	6	GND	In	Analog GND	*	*
J1-7	7	4c	Out	HDO, LDO, HLDO, HPO	1A	1A
J1-8	8	Network ID	In	NI	*	*
J1-9	9	Network ID	In	NI	*	*
J1-10	10	4c	Out	HDO, LDO, HLDO, HPO	1A	1A
J1-11	11	Network ID	In	NI	*	*
J1-12	12	Network ID	In	NI	*	*
J1-13	13	4c	Out	HDO, LDO, HLDO, HPO		
J1-14	14	Network ID	In	NI	*	*
J1-15	15	Network ID		NI	*	*
J1-16	16	4b	Out	HDO, LDO, HLDO, HPO, LPO		
J1-17	17	1a, 1c	In	HDI, LDI, HLDI, RES, RES32K, AI5V, RAI, CNTR1	*	*
J1-18	18	GND	In	GND	*	*
J1-19	19	4b	Out	HDO, LDO, HLDO, HPO, LPO	1A	1A
J1-20	20	1a, 1c	In	HDI, LDI, HLDI, RES, RES32K, AI5V, RAI	*	*
J1-21	21	1a	In	HDI, LDI, HLDI, RES, RES32K, AI5V, RAI	*	*

Signal ID	J1 pin	Interface type	Input / Output	Description	Max current average	Max current peak
J2-6	6	1a	In	HDI, LDI, HLDI, RAI	*	*
J2-7	7	1a	In	HDI, LDI, HLDI, RAI	*	*
J2-8	8	1a	In	HDI, LDI, HLDI, RAI	*	*
J2-9	9	1a	In	HDI, LDI, HLDI, RAI	*	*
J2-10	10	1a	In	HDI, LDI, HLDI, RAI	*	*
J2-11	11	1a	In	HDI, LDI, HLDI, RAI	*	*
J2-12	12	1a	In	HDI, LDI, HLDI, RAI	*	*
J2-13	13	1a	In	HDI, LDI, HLDI, RAI	*	*
J2-14	14	GND	Out	Analog GND	*	*
J2-15	15	3a, 5	Out	HDO, REFCTL	50mA	50mA

Wiring diagram pages list

Pin configuration I/O-B+

Signal ID	J1 pin	Interface type	Input / Output	Description	Max current average	Max current peak
J1-1	1	4d	Out	HDO, LDO, HLDO, HPO, LPO	16A	20A
J1-2	2	*	*	*	*	*
J1-3	3	4d	out	HDO, LDO, HLDO, HPO, LPO	16A	20A
J1-4	4	3c	Out	HDO	10A	20A
J1-5	5	GND	*	*	*	*
J1-6	6	GND	Out	Analogue GND	*	*
J1-7	7	3c	Out	HDO	10A	20A
J1-8	8	NI	*	*	*	*
J1-9	9	NI	*	*	*	*
J1-10	10	3c	Out	HDO	10A	20A
J1-11	11	NI	*	*	*	*
J1-12	12	NI	*	*	*	*
J1-13	13	3c	Out	HDO	10A	20A
J1-14	14	NI	*	*	*	*
J1-15	15	NI	*	*	*	*
J1-16	16	3c	Out	HDO	10A	20A
J1-17	17	GND	*	*	*	*
J1-18	18	GND	*	*	*	*
J1-19	19	3c	Out	HDO	10A	20A
J1-20	20	1a	In	HDI, LDI, HLDI, RAI	*	*
J1-21	21	1a	In	HDI, LDI, HLDI, RAI	*	*

Signal ID	J1 pin	Interface type	Input / Output	Description	Max current average	Max current peak
J2-1	1	4d	Out	HDO, LDO, HLDO, HPO, LPO	10A	20A
J2-2	2	GND	*	*	*	*
J2-3	3	GND	*	*	*	*
J2-4	4	4d	Out	HDO, LDO, HLDO, HPO, LPO	10A	20A
J2-5	5	1a, 2b, 6	In	HDI, LDI, HLDI, RAI, AI5V, RES, RES32K, CNTR, wake-up	*	*
J2-6	6	1a, 2b, 6	In	HDI, LDI, HLDI, RAI, AI5V, RES, RES32K, CNTR, wake-up	*	*
J2-7	7	4c	In	HDO, LDO, HLDO, HPO	10A	20A
J2-8	8	1a,1b,1c	In	HDI, LDI, HLDI, RAI, AI5V, RES, RES32K	*	*
J2-9	9	1a,1b,1c	In	HDI, LDI, HLDI, RAI, AI5V, RES, RES32K	*	*
J2-10	10	4c	Out	HDO, LDO, HLDO, HPO	10A	20A
J2-11	11	1b, 1c	In	AI5V, RES, RES32K	*	*
J2-12	12	1b, 1c	In	AI5V, RES, RES32K	*	*
J2-13	13	3e	Out	HDO, LDO, HLDO	10A	20A
J2-14	14	GND	Out	Analogue GND	*	*
J2-15	15	5	Out	REFMEA	< 50 mA	*

Wiring diagram pages list

Pin configuration I/O-A+ and I/O-B+

Interface circuit 1a

The input can be used for both digital and analogue signals that have U_{24VIO} as reference. The circuit shall sink 8 mA when connected to U_{24VIO} or source 8 mA when connected to GND. The input shall be converted from analog voltage to digital 10 bit resolution with scaling relative to U_{24VIO}.
The input shall be regarded as a power line according to "Volvo Technical Regulation 15 79 908, EMC Requirements".

Model of the input circuit:

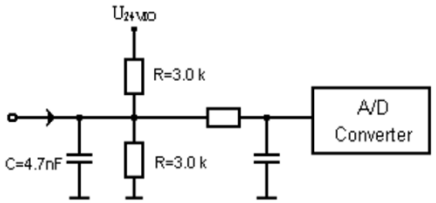

Interface circuit 1b

The input is used for resistive sensors. The circuit shall supply 5 V through a resistor of 10 kΩ. When used to measure temperature, the output current to the sensor shall then be minimised to avoid internal power dissipation in the sensor.

Model of the input circuit:

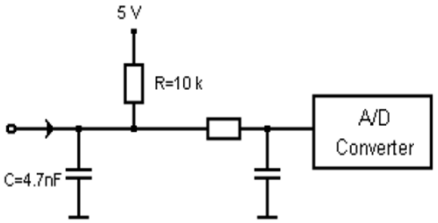

Interface circuit 1c

The input can be used for both digital and analogue signals.
The total input resistance ,R_{tot} = R // $R_{A/D}$, shall be 100 kΩ < R_{tot} < 500 kΩ.

Model of the input circuit:

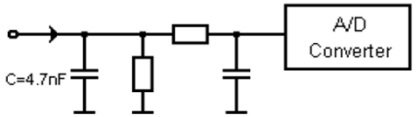

Interface circuit 2b

Pulse input circuit. The input can be used for both digital and analogue signals and as pulse counter input with fixed trigger level. The circuit shall sink or source 8 mA at U24VIO = 28 V when connected to U24VIO or GND.

Model of input circuit:

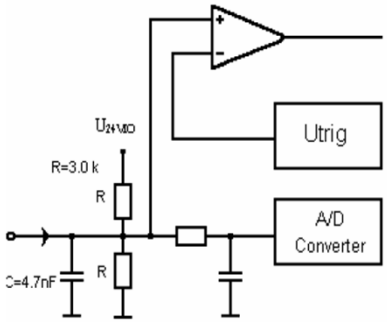

Interface circuit 3a

Model of high side output stage circuit same as interface circuit 3b in Chapter 2.3.1.5.2, but without PWM capability and no biasing resistors for open circuit detection.

Interface circuit 3c

High side output circuit. The switch provides current sense signal to an A/D converter. To detect open circuit when the switch is open the interface shall sink approximately 2 mA when connected to U_{24VIO} = 28V or source approximately 0.5 mA when connected to GND. The voltage shall be converted to digital 10 bit resolution with scaling relative to U_{24VIO}. The interface shall not be regarded as a power line according to "Volvo Technical Regulation 15 79 908, EMC Requirements".

Model of the output circuit:

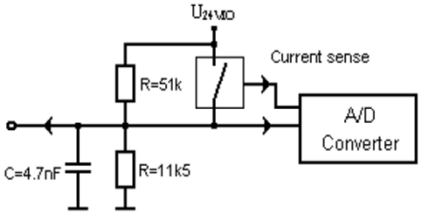

Wiring diagram pages list

Pin configuration I/O-A+ and I/O-B+

Interface circuit 3e

Model of high side, low side output stage. This circuit is similar to circuit 4b but without PWM drive capabilities.

Interface circuit 4b

Totem pole output stage may be used as high side, low side or high/low switch. Capable of low frequency PWM driving high side or low side switch but not both synchronously Open circuit voltage shall be approximately 9,2 V / $U_{24VIO=28V}$. When the switch is open the interface shall sink approximately 2 mA if connected to $U_{24VIO=28V}$ or source 0.5 mA when connected to GND. The voltage shall be converted to digital 10 bit resolution with scaling relative to U_{24VIO}. The interface shall not be regarded as a power line according to "Volvo Technical Regulation 15 79 908, EMC Requirements".

Model of the output circuit:

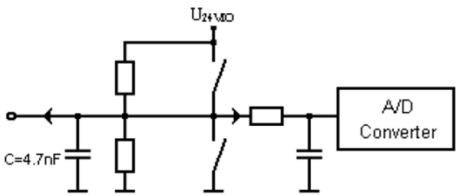

Interface circuit 4c

Model of high side, low side output stage. This circuit is similar to circuit 4b but without low side PWM drive capabilities.

Interface circuit 4d

Totem pole output stage may be used as high side, low side or high/low switch. Capable of low frequency PWM driving high side or low side switch but not both synchronously. Both switches provide current sense signal to an A/D converter. To detect open circuit when the switches are open the interface shall sink approximately 2 mA when connected to $U_{24VIO = 28V}$ or source approximately 0.5 mA when connected to GND. The voltage shall be converted to digital 10 bit resolution with scaling relative to U_{24VIO}. The interface shall not be regarded as a power line according to "Volvo Technical Regulation 15 79 908, EMC Requirements".

Model of the output circuit:

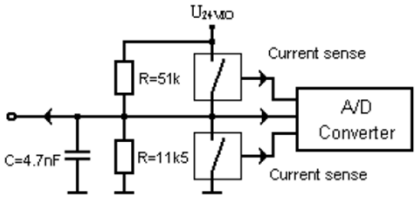

Interface circuit 5

Model of a 5 V reference voltage supply for potentiometers and pressure sensors.
Supply current 20 mA, current limited to < 50 mA.

Model of the output circuit:

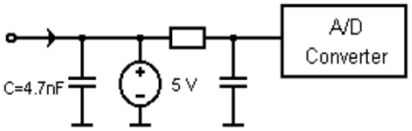

Interface circuit 6

The pin is used for interrupt the ECU. Same interface as circuit 1a. The application software can initiate the interrupt function. The pin is used for waking-up the ECU from sleep mode.

Wiring diagram pages list

Radiator fans drive junction box

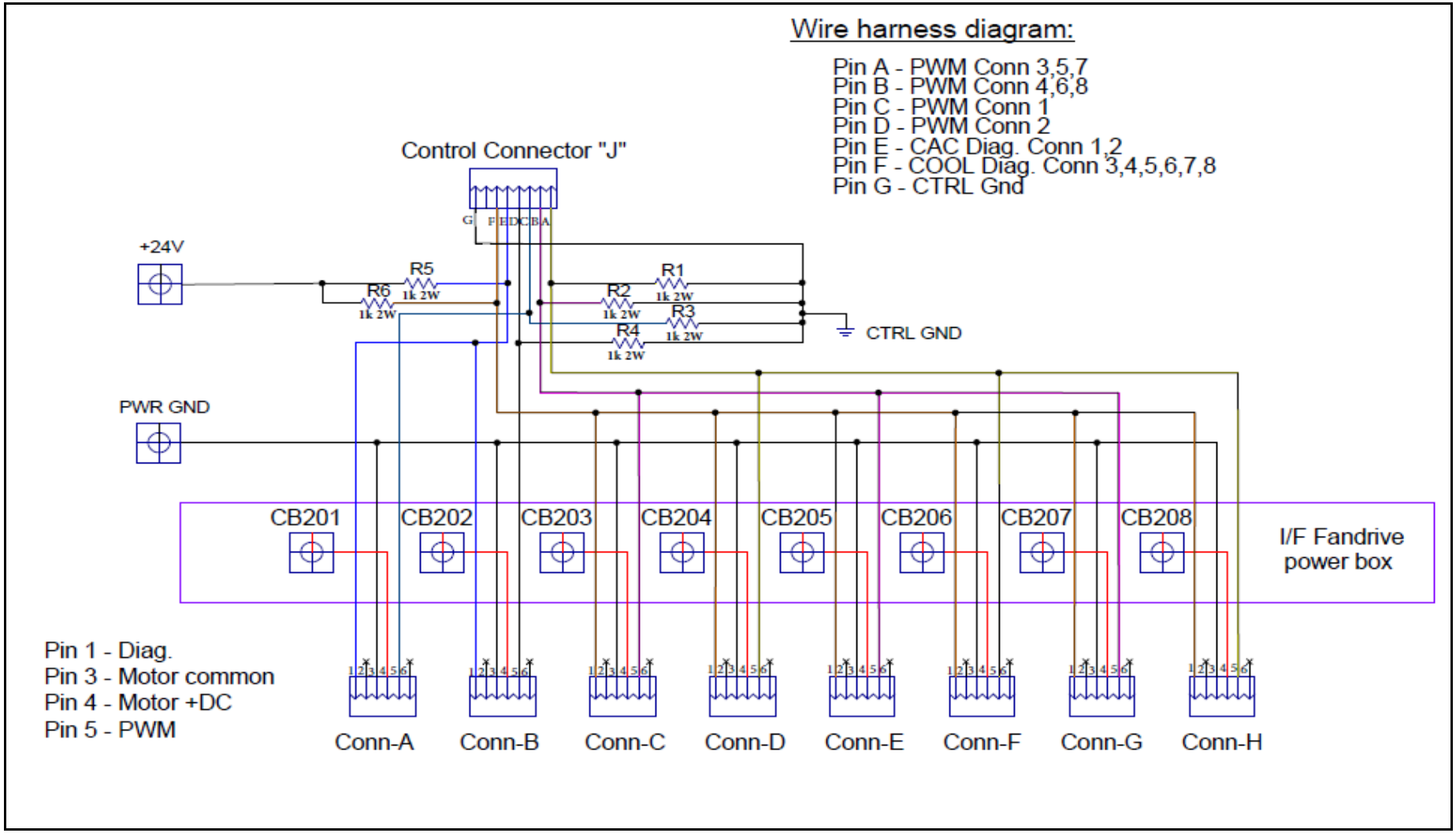

PREVOST	WIRING DIAGRAM	No: D061640 Page D 9/9	REVISION 0

Circuits list

Circuit ID	Description	Circuit ID	Description	Circuit ID	Description
0	GND Batteries	00R5	RJB electronic GND	A1.36	Transmission Alisson
0A	12V outlets	0RAD	GND Chassis	A1.37	Transmission Alisson
00A	Entrance door	0RAD2	Fans drive electric	A1.51	Transmission Alisson
00A1	Multiplex power	0RC4	Gnd Upper Pump	A1.52	Transmission Alisson
00A2	Indirect lights	0SS	VSS GND	A1.54	Transmission Alisson
0AltLL	GND Chassis	0SS1	VSS	A1.55	Transmission Alisson
0AltR	GND Chassis	0SS2	VSS	A1.58	Transmission Alisson
0B	GND Chassis	0SS3	VSS	A1.71	Transmission Alisson
0C	Ignition & engine start	0SW	Indirect lights	A1.74	Transmission Alisson
0chgr	Pre heat	0SW1	Indirect lights	A1.76	Transmission Alisson
0COND	Condensor fans GND	0TR-White	VECT	A1.77	Transmission Alisson
0ECU	Engine ECU Volvo	00VA	RJB electronic GND	A2A.9	Transmission Alisson
0EV2	HVAC passengers	0W	WCL GND	A2A.11	Transmission Alisson
0EVAP1	HVAC passengers	0WC	Gnd WCL Remote CTRL	A3.1	Transmission Alisson
0EVAP2	HVAC passengers	5	Upper Defrost fan	A3.2	Transmission Alisson
0F	GND Customer	12Ecu	12V ECU	A3.3	Transmission Alisson
00F	FJB electronic GND	12ISH	Pwr I Shift	A3.5	Transmission Alisson
0F1	Upper wipers GND	12VA	Batteries	A3.6	Transmission Alisson
00F1	Multiplex power	12VD	Batteries	A3.7	Transmission Alisson
00F2	Multiplex power	12VD1	12VD	A4B.8	Transmission Alisson
00F3	Multiplex power	24VA	Batteries	A5.B	Transmission Alisson
00F6	Lights switch	24VD	Batteries	A9CX1.2	Cluster
0FE	GND stud	24VD2	Equalizer	A9CX1.4	ESP
0FH	Wipers & washer	24VD3	Ignition & engine start	A9CX1.5	ESP
00FH	FJB electronic GND	24VI	24 WUP	A9CX1.6	Cluster
00FH1	HVAC defroster	71	Upper Defrost Pump	A9CX2.1	ESP
00FH2	Multiplex power	900	Networks	A9CX2.2	ESP
00FR	FJB-RJB junction	901	Networks	A9CX2.3	ESP
0P	120VAC outlets	A1.11	Transmission Alisson	A9CX2.4	ESP
0PA	GND stud	A1.12	Transmission Alisson	A9CX2.6	ESP
0PR	120VAC outlets	A1.15	Transmission Alisson	A9CX2.7	ESP
0PR1	120VAC outlets	A1.16	Transmission Alisson	A9CX2.9	ESP
0R	GND Chassis	A1.18	Transmission Alisson	A9CX2.10	ESP
00R	Networks	A1.19	Transmission Alisson	A9CX2.12	ESP
00R1	RJB electronic GND	A1.24	Transmission Alisson	A9CX2.13	ESP
00R2	Multiplex power	A1.25	Transmission Alisson	A9CX2.16	ESP
00R3	Multiplex power	A1.31	Transmission Alisson	A9CX2.17	ESP
00R4	Multiplex power	A1.33	Transmission Alisson	A9CX3.2	ESP

Circuits list

Circuit ID	Description	Circuit ID	Description	Circuit ID	Description
A9CX3.3	ESP	A34R.D3	Fans drive electric	A42J1.10	Kneeling & Tag & low buoy
A9CX3.5	ESP	A34R.E3	Fans drive electric	A42J1.13	Kneeling & Tag & low buoy
A9CX3.7	ESP	A34R.F3	Fans drive electric	A42J1.16	Kneeling & Tag & low buoy
A9CX3.9	ESP	A34R.G3	Fans drive electric	A42J1.19	Kneeling & Tag & low buoy
A9CX3.10	ESP	A34R.H3	Fans drive electric	A42J2.15	Kneeling & Tag & low buoy
A9CX4.1	ESP	A36JA.11	Horn	A42RJ2.14	Kneeling & Tag & low buoy
A9CX4.4	ESP	A36JA.15	Ignition & engine start	A42RJ2.18	Kneeling & Tag & low buoy
A9CX4.7	ESP	A36JA.17	Ignition & engine start	A43J1.1	Lugg door lock
A9CX4.8	ESP	A36JA.25	Brake & Eng.brake & retarder	A43J1.3	Lugg door lock
A9CX4.10	ESP	A36JB.2	Ignition	A43J1.7	TPMS
A9CX4.11	ESP	A36JB.14	Fire suppression	A43J1.10	Air dryer
A10X3.4	Pre heat	A39P101.1	Speakers	A43J2.5	Lugg. lock press sw.
A10X3.6	Pre heat	A39P101.2	Speakers	A43J2.7	Engine ECU Volvo
A11A.2	Pre heat	A39P101.3	Speakers	A43J2.10	Engine ECU Volvo
A14.A12	Cluster	A39P101.4	Speakers	A43RJ1.17	ACB
A14.B1	Cluster	A39P101.5	Speakers	A43RJ1.18	Lugg. lock GND
A14.B18	Cluster	A39P101.6	Speakers	A43RJ2.2	Air dryer
A14.B20	Cluster	A39P101.8	Speakers	A44J1.1	Upper wipers
A14.B21	Cluster	A39P101.9	Speakers	A44J1.3	Upper wipers
A16.5	Destination signs	A39P901.1	Speakers	A44J1.4	Entrance door
A16.6	Destination signs	A39P901.4	Speakers	A44J1.7	Wipers & washer
A17.AC	Pre heat	A39P901.5	Speakers	A44J1.10	Wipers & washer
A20.3	Digital clock	A39P901.6	Speakers	A44J1.13	Upper defrost
A27.30	ZF steering	A41J1.1	Pre heat	A44J1.16	Horn
A27.87A	ZF steering	A41J1.3	Step lights	A44J1.19	Engine & RJB cmpt. lights
A34.A5	Fans drive electric	A41J1.4	Front occ. lamp	A44J2.1	Sun visor
A34.B5	Fans drive electric	A41J1.7	Shutdown	A44J2.4	Sun visor
A34.C5	Fans drive electric	A41J1.10	Kneeling & Tag & low buoy	A44J2.7	Driver lights
A34.D5	Fans drive electric	A41J1.16	Engine ECU Volvo	A44J2.10	Sun visor
A34.E5	Fans drive electric	A41J1.19	Engine ECU Volvo	A44J2.13	Sun visor
A34.F5	Fans drive electric	A41RJ1.2	Lights GND	A44RJ1.17	Flashers & markers, Clerance lgts
A34.G5	Fans drive electric	A41RJ1.6	Kneeling & Tag & low buoy	A44RJ1.18	Upper defrost
A34.H5	Fans drive electric	A41RJ1.18	Lights GND	A44RJ2.2	Entrance door
A34J.E	Fans drive electric	A41RJ2.14	Front occ. lamp GND	A44RJ2.3	Wipers GND
A34J.F	Fans drive electric	A42J1.1	Kneeling & Tag & low buoy	A45J1.1	HVAC defroster
A34R.A3	Fans drive electric	A42J1.3	Kneeling & Tag & low buoy	A45J1.3	HVAC defroster
A34R.B3	Fans drive electric	A42J1.4	Kneeling & Tag & low buoy	A45J1.4	ZF steering
A34R.C3	Fans drive electric	A42J1.7	Kneeling & Tag & low buoy	A45J1.7	Driver's lights

Circuits list

Circuit ID	Description	Circuit ID	Description	Circuit ID	Description
A45J1.16	Mirrors	A48RJ1.18	Flashers & markers, Clerance lgts	A52J2.13	Ignition & engine start
A45J2.1	HVAC defroster	A48RJ2.2	Flashers & markers, Clerance lgts	A52RJ1.17	Lavatory
A45J2.4	HVAC defroster	A49J1.1	Fans drive electric	A52RJ1.18	Engine & RJB cmpt. lights
A45J2.7	Driver window	A49J1.3	Fans drive electric	A52RJ2.3	Ignition & engine start
A45J2.13	Driver window	A49J2.1	Alternators	A53J1.1	Parcel rack A/C system
A45RJ1.17	Cornering & fog lights	A49J2.13	Brake & Eng.brake & retarder	A53J1.3	Parcel rack A/C system
A46J1.1	Horn	A49RJ2.2	Fans drive electric	A53J1.4	Lavatory
A46J1.4	Flashers & markers, Clerance lgts	A50J1.7	Back-up warnings	A53J1.13	Lavatory
A46J1.7	Cornering & fog lights	A50J1.13	Flashers & markers, Tail lgts	A53J2.1	Indirect lights
A46J1.10	Flashers & markers, Clerance lgts	A50J1.19	Flashers & markers, Tail lgts	A53J2.4	Reading lamps & chime
A46J1.13	Flashers & markers, Clerance lgts	A50J2.1	Flashers & markers, Tail lgts	A53J2.7	Lavatory
A46J2.4	Flashers & markers, Clerance lgts	A50J2.7	Flashers & markers, Tail lgts	A53J2.10	Reading lamps & chime
A46J2.7	Flashers & markers, Clerance lgts	A50J2.10	Back-up warnings	A53J2.13	Emergency & aisle lights
A46RJ1.17	Flashers & markers, Clerance lgts	A50RJ1.17	Flashers & markers, Tail lgts	A53RJ1.17	Lavatory
A46RJ1.18	Flashers & markers, Clerance lgts	A50RJ1.18	Flashers & markers, Tail lgts	A53RJ1.18	Emergency & aisle lights
A47J1.1	HVAC defroster	A50RJ2.2	Back-up warnings	A53RJ2.2	Parcel rack A/C system
A47J1.3	HVAC defroster	A50RJ2.3	Air dryer	A53RJ2.3	Reading lamps & chime
A47J1.4	HVAC defroster	A51J1.1	Docking lights	A54J1.1	HVAC passengers
A47J1.7	Wipers & washer	A51J1.3	Docking lights	A54J1.3	HVAC passengers
A47J1.10	Entrance door	A51J1.4	Flashers & markers, Tail lgts	A54J1.4	Pre heat
A47J1.13	Entrance door	A51J1.7	Lights	A54J1.7	HVAC passengers
A47J1.16	Entrance door	A51J1.10	Flashers & markers, Tail lgts	A54J1.10	Pre heat
A47J1.19	Entrance door	A51J1.13	Flashers & markers, Tail lgts	A54J1.16	HVAC passengers
A47J2.1	HVAC defroster	A51J1.16	Transmission Alisson	A54J1.19	HVAC passengers
A47J2.7	Entrance door	A51J1.19	WCL	A54J2.1	Parcel rack A/C system
A47RJ1.6	HVAC defroster	A51J2.1	Flashers & markers, Tail lgts	A54J2.4	HVAC passengers
A47RJ1.17	HVAC defroster	A51J2.4	Transmission Alisson	A54J2.7	HVAC passengers
A47RJ1.18	Entrance door	A51J2.7	Flashers & markers, Tail lgts	A54J2.10	HVAC passengers
A47RJ2.2	Entrance door	A51J2.10	Flashers & markers, Tail lgts	A54J2.13	HVAC passengers
A47RJ2.3	Upper def. water pump GND	A51RJ1.17	Flashers & markers, Tail lgts	A54J2.15	HVAC passengers
A48J1.1	Cornering & fog lights	A51RJ1.18	WCL	A54RJ1.6	HVAC passengers
A48J1.4	Cornering & fog lights	A52J1.1	Fans drive electric	A54RJ1.17	HVAC passengers
A48J1.7	Flashers & markers, Clerance lgts	A52J1.3	Fans drive electric	A54RJ1.18	HVAC GND
A48J1.10	Flashers & markers, Clerance lgts	A52J1.4	Lavatory	A54RJ2.2	HVAC GND
A48J2.1	Flashers & markers, Clerance lgts	A52J1.7	Engine & RJB cmpt. lights	A54RJ2.3	HVAC passengers
A48J2.4	Flashers & markers, Clerance lgts	A52J1.10	Ignition & engine start	A55J1.1	Driver lights
A48J2.13	Flashers & markers, Clerance lgts	A52J2.1	Alternators	A55J1.4	Cluster
A48RJ1.17	Cornering & fog lights	A52J2.4	Alternators	A55J1.7	Back-up camera

Circuits list

Circuit ID	Description	Circuit ID	Description	Circuit ID	Description
A55J2.15	Steering	A96.23.Red	TPMS	A121C.15	VSS
A55RJ1.18	Steering	A96.24.Black	TPMS	A121D.7	VSS
A56J1.3	Cluster	A96.25.Red	TPMS	A130.3	Fire suppression
A56J1.4	Cluster	A96.27.Black	TPMS	A130.4	Fire suppression
A56J1.7	Cluster	A96.28.Red	TPMS	A130.6	Fire suppression
A56J1.10	Cluster	A100.3.White	TPMS	A130.8	Fire suppression
A56J1.13	Multiplex power	A101.3.White	TPMS	A130.11	Fire suppression
A56J1.19	12VISS	A101.7.White	TPMS	A131A.C	Fire suppression
A56J2.15	Lugg door lock	A102.3.White	TPMS	A131B.A	Fire suppression
A56RJ1.18	Windows ajar	A103.1	Steering	A131B.C	Fire suppression
A57J1.1	WCL	A103.3	Steering	A137A.4	Urea system
A57J1.3	WCL	A103.5	Horn	A137A.7	Urea system
A57RJ2.14	WCL system GND	A108.5	Transmission I Shift	A137A.8	Urea system
A60 Gnd	VSS	A108.7	Transmission I Shift	A137A.24	Urea system
A60 L+	VSS	A108.8	Transmission I Shift	A137A.28	Urea system
A60 R+	VSS	A108.9	Transmission I Shift	A137A.40	Urea system
A65 Gnd	VSS	A108.10	Transmission I Shift	A137A.44	Urea system
A65 L+	VSS	A109A.7	Transmission I Shift	A137A.49	Urea system
A65 R+	VSS	A109A.8	Transmission I Shift	A137A.50	Urea system
A77.A	Equalizer	A109A.9	Transmission I Shift	A137A.51	Urea system
A77.H	Equalizer	A109A.10	Transmission I Shift	A137A.54	Urea system
A78.3	Equalizer	A120A.5	VSS	A137A.56	Urea system
A78.4	Equalizer	A120B.1	VSS	A137A.59	Urea system
A79.3	Equalizer	A120B.2	VSS	A137A.62	Urea system
A80.3	Equalizer	A120B.3	VSS	A138.3	Urea system
A80.4	Equalizer	A120B.4	VSS	A138.12	Urea system
A81JB.4	Engine ECU Volvo	A120B.5	VSS	A150.GND	VSS
A81JB.6	ZF steering	A120B.6	VSS	A150.L	VSS
A81JB.10	Engine ECU Volvo	A120B.7	VSS	A150.R	VSS
A81JB.15	Ignition & engine start	A120B.8	VSS	A151B.1	USB
A81JB.16	Engine ECU Volvo	A120C.4	VSS	A151B.2	USB Gnd
A81JB.17	Engine ECU Volvo	A121A.18	VSS	Alt LL.2	Alternators
A81JB.19	Engine ECU Volvo	A121B.16	VSS	Alt LR.2	Alternators
A81JB.22	Engine ECU Volvo	A121B.17	VSS	Alt UR.2	Alternators
A81JB.23	Engine ECU Volvo	A121C.7	VSS	AltLL	Alternators
A81JB.25	Engine ECU Volvo	A121C.11	VSS	AltLR	Alternators
A81JB.26	Engine ECU Volvo	A121C.12	VSS	AltUR	Alternators
A96.8.Black	TPMS	A121C.13	VSS	Audio Out HDMI L+	VSS

Circuits list

Circuit ID	Description	Circuit ID	Description	Circuit ID	Description
Audio Out HDMI R+	VSS	D3	Upper wipers	F25	12V outlets
Audio Out HDMI R-L-	VSS	D7	Entrance door	F26	Spares VECF
AuxVideoGnd	VSS	D9	Pre heat	F27	Spares VECF
AuxVideoL	VSS	D12	Horn	F29	ECU ignition
AuxVideoR	VSS	D13	Horn	F30	Networks
B85.2	Urea system	D55	Lights	F33	Multiplex power
B97.2	Urea system	DL0H	Spares wires	F34	Multiplex power
B98.2	Urea system	DL0HS	Spares wires	F35	Multiplex power
B115A.3	Urea system	DL0L	Spares wires	F36	24VD Eng. Start Sw83
BLACK	120VAC outlets	DL0LS	Spares wires	F37	Entrance door
Black	Pre heat	DL1H	Networks	F39	24 VD customer
BLK1	VSS	DL1L	Networks	F40	Fire suppression
BLK2	VSS	DL2H	Network	F42	Transmission I Shift
BussBar	12VD TO CB2	DL2L	Network	F43	Transmission I Shift
CB1	24 WUP	DL3H	Networks	F44	Multiplex power
CB2	Ignition & engine start	DL3L	Networks	F45	Multiplex power
CB3	HVAC passengers	DL7H	Networks ECU	F46	Multiplex power
CB5	24 WUP	DL7L	Networks ECU	F47	Multiplex power
CB6	24VD	DL9H	Networks ECU	F50	HVAC defroster
CB8	12 WUP	DL9L	Networks ECU	F51	Destination signs
CB9	Pre heat	DVD Gnd	VSS	F53	Digital clock
CB10	12 WUP	DVD L+	VSS	F54	Upper wipers
CB11	VSS	DVD R+	VSS	F55	Back-up camera
CB13	120VAC outlets	EI.7	Cluster	F73	Engine ECU Volvo
CB48	Flashers & markers, Clerance lgts	EI.18	Engine ECU Volvo	F90	Urea system
CB128	24VD	EMS.EB29	Ignition & engine start	F91	Engine ECU Volvo
CB201	Fans drive electric	F4	Volvo link TGW	F95	Volvo link TGW
CB202	Fans drive electric	F10	Cluster	F96	Urea system
CB203	Fans drive electric	F11	Horn	F96AH	VSS
CB204	Fans drive electric	F13	12VD Customer	F99	Engine ECU Volvo
CB205	Fans drive electric	F16	12V Eng. run	F100	Engine ECU Volvo
CB206	Fans drive electric	F17	Multiplex power	F101	R1 to Starter
CB207	Fans drive electric	F18	Multiplex power	F106	Multiplex power
CB208	Fans drive electric	F19	Multiplex power	F107	Multiplex power
Cd1	Networks	F20	Multiplex power	F108	Networks
CTS	Networks	F21	Multiplex power	F109	Engine & RJB cmpt. lights
Cts	Networks	F23	ESP	F110	Transmission Alisson
D1	Ignition & engine start	F24	12V Ign	F112	Trailer interface

Circuits list

Circuit ID	Description	Circuit ID	Description	Circuit ID	Description
F117	Spares VECR	L-	VSS	N17	Networks
F121	CCust	L142.3	Lavatory	N18	Networks
F122	Spares VECR	L207.1	WCL	N19	Networks
F123	Pre heat	L207.2	WCL lights platform	N20	Networks
F124	Pre heat	L207.3	WCL	N21	Networks
F126	HVAC passengers	L207.GND	WCL	N22	Networks
F127	Pre heat	L350A.B2	Engine ECU Volvo	N23	Networks
F131	CCust	L400.G	Engine heater outlet	N24	Networks
F132	Multiplex power	L400.L	Engine heater outlet	N25	Networks
F133	Multiplex power	L400.N	Engine heater outlet	N26	Networks
F134	Multiplex power	LF+	VSS	N27	Networks
F135	Multiplex power	LF-	VSS	N28	Networks
F136	Multiplex power	LR+	VSS	N29	Networks
F137	Equalizer	LR-	VSS	N30	Networks
F138	Reading lamps & chime	Mo65.3	Fans drive electric	N31	Networks
F139	Alternators	Mo67.3	Fans drive electric	N56-1	Networks
F141	HVAC passengers	Mo68.3	Fans drive electric	N56-2	Networks
F142	HVAC passengers	Mo69.3	Fans drive electric	N57 1	Networks
F143	HVAC passengers	Mo70.3	Fans drive electric	N57 2	Networks
F144	HVAC passengers	Mo71.3	Fans drive electric	Pot1	Driver lights
F147	CCust	Mo72.3	Fans drive electric	R+	VSS
F148	12VD	Mo73.3	Fans drive electric	R-	VSS
F152	Spares VECR	N1	Networks	R-12VISS	VSS
F156	Unican	N2	Networks	R4.85	Fire suppression
F199	Fans drive electric	N3	Networks	R4.87A	Pre heat
F200	VSS	N4	Networks	R12	HVAC passengers
F201	VSS	N5	Networks	R12VISS	VSS
F202	VSS	N6	Networks	R20.87	Pre heat
F203	VSS	N7	Networks	R21.87	Ignition & engine start
F243	HVAC passengers	N8	Networks	R22.87	ECU ignition
gnd 1	Cantrack	N9	Networks	R23.30	Transmission Alisson
Gnd 2	Cantrack	N10	Networks	R25.87	24V Ignition
GndA	Networks	N11	Networks	R26.30	HVAC passengers
GREEN	120VAC outlets	N12	Networks	R27.87A	Wipers & washer
Green	Pre heat	N13	Networks	R28.87A	Upper wipers
GRN1	VSS	N14	Networks	R29	Engine ECU Volvo
GRN2	VSS	N15	Networks	R30.87	12V Eng run customer
L+	VSS	N16	Networks	R31.87	12V Ign customer

Circuits list

Circuit ID	Description	Circuit ID	Description	Circuit ID	Description
R34.30	12V ECU	Se21.2	HVAC defroster	Shield A16.7	Destination signs
R36.87	Horn	Se23.C	HVAC passengers	SHL2	VSS
R37.30	Horn	Se24.2	HVAC passengers	So9.B	HVAC passengers
R38.87	12V outlets	Se24.3	HVAC passengers	spare10	Spares wires
R40.87	Transmission I Shift	Se25.2	HVAC passengers	spare11	Spares wires
R47.87	WCL	Se30.A	Engine & RJB cmpt. lights	spare12	Spares wires
R Starter	Ignition & engine start	Se32.A	Transmission Alisson	spare13	Spares wires
Radio Gnd	VSS	Se32.B	Transmission Alisson	spare14	Spares wires
Radio L+	Audio	Se33.A	Transmission Alisson	spare15	Spares wires
Radio R+	Audio	Se34.A	Transmission Alisson	spare16	Spares wires
Red	USB	Se34.B	Transmission Alisson	spare17	Spares wires
RED1	VSS	Se35.A	Transmission Alisson	spare18	Spares wires
RED2	VSS	Se35.B	Transmission Alisson	spare19	Spares wires
Res21	RJB Cmpt. light	Se37.1	ESP	spare20	Spares wires
Res22	Engine & RJB cmpt. lights	Se37.2	ESP	spare21	Spares wires
Res23	WCL	Se38.1	ESP	spare22	Spares wires
RF+	VSS	Se38.2	ESP	spare23	Spares wires
RF-	VSS	Se39.1	ESP	spare24	Spares wires
RR+	VSS	Se39.2	ESP	spare25	Spares wires
RR-	VSS	Se40.1	ESP	spare28	Spares wires
RTS	Networks	Se40.2	ESP	spare29	Spares wires
Rts	Networks	Se41	Cond. door sw.	spare30	Spares wires
RX	TPMS	Se45.2	Wipers & washer	spare31	Spares wires
Rx	Cantrack	Se46.B	Trailler park Brake & Eng.brake	spare32	Spares wires
RxD	Networks	Se53.C	Cluster	spare33	Spares wires
RxTx	Networks	Se54.C	Cluster	spare34	Spares wires
Se4.1	Windows ajar	Se55.C	Cluster	spare35	Spares wires
Se11.Sig	Cluster	Se63.1	ESP	spare39	Spares wires
Se11.Wrn	Cluster	Se63.2	ESP	spare40	Spares wires
Se13.B	Engine ECU Volvo	Se64.1	ESP	spare41	Spares wires
Se14A.B	Engine ECU Volvo	Se64.2	ESP	spare42	Spares wires
Se14B.C	Engine ECU Volvo	Se67.C	ESP	spare43	Spares wires
Se15.1	Entrance door	Se69.C	ESP	spare44	Spares wires
Se17.1	Entrance door	Se74.3	Transmission Alisson	spare64	Spares wires
Se18.B	Brake & Eng.brake & retarder	Se79.4	Kneeling & Tag & low buoy	spare65	Spares wires
Se19 P.D	Brake & Eng.brake & retarder	Se100.4	WCL	spare72	Spares wires
Se19 S.D	Brake & Eng.brake & retarder	Shield 149	GND stud	spare73	Spares wires
Se20.B	Cluster	Shield 149A	GND stud	Spk1 L	Speakers

Circuits list

Circuit ID	Description	Circuit ID	Description	Circuit ID	Description
Spk1 R	Speakers	Sw4.3	Flashers & markers, Clerance lgts	Sw39	Engine & RJB cmpt. lights
Spk2 L	Speakers	Sw4.8	Flashers & markers, Clerance lgts	Sw40.B	Trailler park Brake & Eng.brake
Spk2 R	Speakers	Sw5.3	Upper wipers sw.	Sw41.A1	Mirrors
Spk3 L	Speakers	Sw5.6	Upper wipers sw.	Sw41.A3	Mirrors
Spk3 R	Speakers	Sw6.3	Upper wipers sw.	Sw41.B1	Mirrors
Spk4 L	Speakers	Sw6.4	Wipers & washer	Sw41.B2	Mirrors
Spk4 R	Speakers	Sw10A.2B	Kneeling & Tag & low buoy	Sw41.B4	Mirrors
Spk5 L	Speakers	Sw12.3	Destination signs	Sw42.2	WCL
Spk5 R	Speakers	Sw12.8	Destination signs	Sw42.3	WCL
Spk6 L	Speakers	Sw14.3	Engine ECU Volvo	Sw42.4	WCL
Spk6 R	Speakers	Sw14.8	Engine ECU Volvo	Sw42.5	WCL
Spk9 L	Speakers	Sw16.3	Brake & Eng.brake & retarder	Sw42.6	WCL
Spk9 R	Speakers	Sw16.8	Brake & Eng.brake & retarder	Sw42.7	WCL
Spk10 L	Speakers	Sw17.6	Engine ECU Volvo	Sw43.B	Kneeling & Tag & low buoy
Spk10 R	Speakers	Sw18A.2B	Lugg door lock	Sw44	Engine & RJB cmpt. lights
Spk11 L	Speakers	Sw20.3	WCL	Sw46	Engine & RJB cmpt. lights
Spk11 R	Speakers	Sw20.8	WCL	Sw55.1	Lavatory
Spk12 L	Speakers	Sw21.3	Upper defrost	Sw56.1	Lavatory
Spk12 R	Speakers	Sw21.8	Upper defrost	Sw57	WCL Sliding door Sig
Spk13 L	Speakers	Sw24.3	Driver lights	Sw58.2	Ignition & engine start
Spk13 R	Speakers	Sw24.6	Driver lights	Sw58.3	Engine shutdown sw.
Spk14 L	Speakers	Sw25.3	Lights switch	Sw58.5	Ignition & engine start
Spk14 R	Speakers	Sw25.6	Reading lamps & chime	Sw58.7	Ignition & engine start
STO-LOC selenoid	WCL	Sw26.3	Reading lamps & chime	Sw59.3	Ignition & engine start
Sw1.5	Flashers & markers, Clerance lgts	Sw26.8	Reading lamps & chime	Sw63A.3	Horn
Sw1C258.2	Wipers & washer	Sw27.3	Parcel rack A/C system	Sw63A.4	Horn
Sw1C258.3	Wipers & washer	Sw27.8	Parcel rack A/C system	Sw64	Kneeling & Tag & low buoy
Sw1C258.4	Wipers & washer	Sw29.2	Reading lamps & chime	Sw82.4	Master relay & 12V Ign
Sw1C258.6	Wipers & washer	Sw29.3	Reading lamps & chime	Sw82.5	Master relay & 12V Ign
Sw1C258.7	Wipers & washer	Sw29.8	Reading lamps & chime	Sw83.Acc	Ignition & engine start
Sw1C258.8	Flashers & markers, Clerance lgts	Sw31	WCL System	Sw83.Ign	Ignition & engine start
Sw1C259.1	Flashers & markers, Clerance lgts	Sw32.3	Entrance door	Sw83.St	Ignition & engine start
Sw1C259.2	Flashers & markers, Clerance lgts	Sw33.3	Entrance door	Sw85.A1	Mirrors
Sw1C259.4	Flashers & markers, Clerance lgts	Sw34.1	Entrance door	Sw85.A3	Mirrors
Sw2.3	Flashers & markers, Clerance lgts	Sw34.4	Entrance door	Sw85.B1	Mirrors
Sw2.6	Flashers & markers, Clerance lgts	Sw35.3	Engine ECU Volvo	Sw85.B2	Mirrors
Sw3.3	Cornering & fog lights	Sw35.8	Engine ECU Volvo	Sw85.B4	Mirrors
Sw3.8	Cornering & fog lights	Sw38.2B	Driver window	Sw94	WCL

Circuits list

Circuit ID	Description	Circuit ID	Description	Circuit ID	Description
Sw96.N3	Reading lamps & chime				
Sw97.N1	Reading lamps & chime				
Sw100A.1	Docking swith				
Sw100A.3	Cornering & fog lights				
Sw124.3	Destination signs				
Sw125.B	Kneeling & Tag & low buoy				
Sw152.B	Fire suppression				
Sw156.1	Mirrors				
Sw156.6	Mirrors				
Sw156.8	Mirrors				
Sw157.2B	Sun visor				
Sw158.2B	Sun visor				
TR-Black	Trailler interface				
TR-Blue	VECT				
TR-Brown	Trailler interface				
TR-Green	Trailler interface				
TR-Red	Trailler interface				
TR-Yellow	Trailler interface				
TWU.3	WCL				
TX	TPMS				
Tx	Cantrack				
TxD	Networks				
ve+	Cantrack				
WHITE	120VAC outlets				
White	Pre heat				
WHT1	VSS				
WHT2	VSS				

CIRCUITS LIST

CircuitID	Description	CircuitID	Description	CircuitID	Description
0	GNDBatteries	0RAD	GNDChassis	901	Networks
0A	12Voutlets	0RAD2	Fansdriveelectric	_00	GNDBatteries
00A	Entrancedoor	0RB6	Lav_smoke_detector	A1.11	TransmissionAlisson
00A1	Multiplexpower	0RGA	Rear_Galley	A1.12	TransmissionAlisson
00A2	Cust_Adaptations	0RGA2	Rear_Galley	A1.15	TransmissionAlisson
0AltL	GNDChassis	0SS	VSS_GND	A1.16	TransmissionAlisson
0AltLL	GNDChassis	0SS1	VSS	A1.18	TransmissionAlisson
0AltR	GNDChassis	0SS2	VSS	A1.19	TransmissionAlisson
0AltUL	GNDChassis	0SS2W	WiFi_Option	A1.24	TransmissionAlisson
0B	GNDChassis	0SS3	VSS	A1.25	TransmissionAlisson
0C	Ignition&enginestart	0SS5	Wifi_Chassis_Gnd	A1.31	TransmissionAlisson
0chgr	Preheat	0SW	Indirectlights	A1.33	TransmissionAlisson
0COND	CondensorfansGND	0SW1	Indirectlights	A1.36	TransmissionAlisson
0ECU	EngineECUVolvo	0TR.White	VECT	A1.37	TransmissionAlisson
0EV2	HVACpassengers	00VA	RJBelectronicGND	A1.51	TransmissionAlisson
0EVAP1	HVACpassengers	0W	WCLGND	A1.52	TransmissionAlisson
0EVAP2	HVACpassengers	0WC	GndWCLRemoteCTRL	A1.54	TransmissionAlisson
0F	GNDCustomer	12Ecu	12VECU	A1.55	TransmissionAlisson
00F	ELDITSGateway	12ISH	PwrI_Shift	A1.58	TransmissionAlisson
0F1	UpperwipersGND	12MEM	Mobile_DVR	A1.71	TransmissionAlisson
00F1	Multiplexpower	12SS2	Mobile_DVR	A1.74	TransmissionAlisson
00F2	Multiplexpower	12VA	Batteries	A1.76	TransmissionAlisson
00F6	Lightsswitch	12VD	Batteries	A1.77	TransmissionAlisson
0FB1	UpperwipersGND	12VD1	12VD	A2A.9	TransmissionAlisson
0FD	InvertersGND	12VD4	Unican_power_option	A2A.11	TransmissionAlisson
0FE	GNDstud	12Wup1	WiFi_Option	A3.1	TransmissionAlisson
0FH	Wipers&washer	24VA	Batteries	A3.2	TransmissionAlisson
00FH	FJBelectronicGND	24VD	Batteries	A3.3	TransmissionAlisson
00FH1	HVACdefroster	24VD1	Booster_Block	A3.5	TransmissionAlisson
00FH2	Multiplexpower	24VD2	Equalizer	A3.6	TransmissionAlisson
00FR	FJB-RJBjunction	24VD3	Ignition&enginestart	A3.7	TransmissionAlisson
0P	120VACoutlets	24VI	24WUP	A4B.8	TransmissionAlisson
0PA1	GNDstud	120V_In	120VAC_Outlets	A5.B	TransmissionAlisson
0PA2	GNDstud	120V_Out	120VAC_Outlets	A9CX1.2	Cluster
0PR	120VACoutlets	120V_Out_1	120VAC_Outlets	A9CX1.4	ESP
0PR1	120VACoutlets	120V_Out_2	120VAC_Outlets	A9CX1.5	ESP
0R	GNDChassis	120V_Out_3	120VAC_Outlets	A9CX1.6	Cluster
00R	Networks	400	CTGI_Gateway	A9CX2.1	ESP
00R1	RJBelectronicGND	401	CTGI_Gateway	A9CX2.2	ESP
00R2	Multiplexpower	402	CTGI_Gateway	A9CX2.3	ESP
00R3	Multiplexpower	403	Panic_Sw150	A9CX2.4	ESP
00R4	Multiplexpower	404	Panic_Sw150	A9CX2.6	ESP
00R5	RJBelectronicGND	900	Networks	A9CX2.7	ESP

CIRCUITS LIST

CircuitID	Description	CircuitID	Description	CircuitID	Description
A9CX2.9	ESP	A34R.E3	Fansdriveelectric	A42J1.13	Kneeling
A9CX2.10	ESP	A34R.F3	Fansdriveelectric	A42J1.16	Kneeling
A9CX2.12	ESP	A34R.G3	Fansdriveelectric	A42J1.19	Kneeling
A9CX2.13	ESP	A34R.H3	Fansdriveelectric	A42J2.15	Kneeling
A9CX2.16	ESP	A36JA.10	Ignition&enginestart	A42RJ2.14	Kneeling
A9CX2.17	ESP	A36JA.11	Horn	A42RJ2.18	Kneeling
A9CX3.2	ESP	A36JA.15	Ignition&enginestart	A43J1.1	Lugg_door_lock
A9CX3.3	ESP	A36JA.17	Ignition&enginestart	A43J1.3	Lugg_door_lock
A9CX3.5	ESP	A36JA.18	Ignition&enginestart	A43J1.7	TPMS
A9CX3.7	ESP	A36JA.25	Brake	A43J1.10	Airdryer
A9CX3.9	ESP	A36JB.2	Ignition	A43J2.5	Lugg.lockpresssw.
A9CX3.10	ESP	A36JB.14	Firesuppression	A43J2.7	EngineECUVolvo
A9CX4.1	ESP	A39P101.1	Speakers	A43J2.10	EngineECUVolvo
A9CX4.4	ESP	A39P101.2	Speakers	A43RJ1.17	ACB
A9CX4.7	ESP	A39P101.3	Speakers	A43RJ1.18	Lugg.lockGND
A9CX4.8	ESP	A39P101.4	Speakers	A43RJ2.2	Airdryer
A9CX4.10	ESP	A39P101.5	Speakers	A44J1.1	Upperwipers
A9CX4.11	ESP	A39P101.6	Speakers	A44J1.3	Upperwipers
A10X3.4	Preheat	A39P101.8	Speakers	A44J1.4	Entrancedoor
A10X3.6	Preheat	A39P101.9	Speakers	A44J1.7	Wipers&washer
A11A.2	Preheat	A39P901.1	Speakers	A44J1.10	Wipers&washer
A14.A12	Cluster	A39P901.4	Speakers	A44J1.13	Upperdefrost
A14.B1	Cluster	A39P901.5	Speakers	A44J1.16	Horn
A14.B18	Cluster	A39P901.6	Speakers	A44J1.19	Engine&RJBcmpt.lights
A14.B20	Cluster	A41J1.1	Preheat	A44J2.1	Sunvisor
A14.B21	Cluster	A41J1.3	Steplights	A44J2.4	Sunvisor
A17.AC	Preheat	A41J1.4	Frontocc.lamp	A44J2.7	Driverlights
A27.30	ZFsteering	A41J1.6	Wipers&washer	A44J2.10	Sunvisor
A27.87A	ZFsteering	A41J1.7	Shutdown	A44J2.13	Sunvisor
A34.A5	Fansdriveelectric	A41J1.10	Kneeling	A44RJ1.17	Frflashers
A34.B5	Fansdriveelectric	A41J1.16	EngineECUVolvo	A44RJ1.18	Upperdefrost
A34.C5	Fansdriveelectric	A41J1.19	EngineECUVolvo	A44RJ2.2	Entrancedoor
A34.D5	Fansdriveelectric	A41J2.2	Wipers&washer	A44RJ2.3	WipersGND
A34.E5	Fansdriveelectric	A41J2.15	Wipers&washer	A45J1.1	HVACdefroster
A34.F5	Fansdriveelectric	A41RJ1.2	LightsGND	A45J1.3	HVACdefroster
A34.G5	Fansdriveelectric	A41RJ1.6	Kneeling	A45J1.4	ZFsteering
A34.H5	Fansdriveelectric	A41RJ1.18	LightsGND	A45J1.7	CTGI_Gateway
A34J.E	Fansdriveelectric	A41RJ2.14	Frontocc.lampGND	A45J1.16	Mirrors
A34J.F	Fansdriveelectric	A42J1.1	Kneeling	A45J2.1	HVACdefroster
A34R.A3	Fansdriveelectric	A42J1.3	Kneeling	A45J2.4	HVACdefroster
A34R.B3	Fansdriveelectric	A42J1.4	Kneeling	A45J2.7	Driverwindow
A34R.C3	Fansdriveelectric	A42J1.7	Kneeling	A45J2.13	Driverwindow
A34R.D3	Fansdriveelectric	A42J1.10	Kneeling	A45RJ1.17	Cornering&foglights

CIRCUITS LIST

CircuitID	Description	CircuitID	Description	CircuitID	Description
A46J1.1	Horn	A50J2.1	Rrflashers	A53RJ1.17	Lavatory
A46J1.4	Frflashers	A50J2.7	Rrflashers	A53RJ1.18	Emergency&aislelights
A46J1.7	Cornering&foglights	A50J2.10	Back-upwarnings	A53Rj1.18	Emergency&aislelights
A46J1.10	Frflashers	A50RJ1.17	Rrflashers	A53RJ2.2	ParcelrackA/Csystem
A46J1.13	Frflashers	A50RJ1.18	Rrflashers	A53RJ2.3	Readinglamps&chime
A46J2.4	Frflashers	A50RJ2.2	Back-upwarnings	A54J1.1	HVACpassengers
A46J2.7	Frflashers	A50RJ2.3	Airdryer	A54J1.3	HVACpassengers
A46RJ1.17	Frflashers	A51J1.1	Dockinglights	A54J1.4	Preheat
A46RJ1.18	Frflashers	A51J1.3	Dockinglights	A54J1.7	HVACpassengers
A47J1.1	HVACdefroster	A51J1.4	Rrflashers	A54J1.10	Preheat
A47J1.3	HVACdefroster	A51J1.7	Lights	A54J1.16	HVACpassengers
A47J1.4	HVACdefroster	A51J1.10	Rrflashers	A54J1.19	HVACpassengers
A47J1.7	Wipers&washer	A51J1.13	Rrflashers	A54J2.1	ParcelrackA/Csystem
A47J1.10	Entrancedoor	A51J1.16	TransmissionAlisson	A54J2.4	HVACpassengers
A47J1.13	Entrancedoor	A51J1.19	WCL	A54J2.7	HVACpassengers
A47J1.16	Entrancedoor	A51J2.1	Rrflashers	A54J2.10	HVACpassengers
A47J1.19	Entrancedoor	A51J2.4	TransmissionAlisson	A54J2.13	HVACpassengers
A47J2.1	HVACdefroster	A51J2.7	Rrflashers	A54J2.15	HVACpassengers
A47J2.7	Entrancedoor	A51J2.10	Rrflashers	A54RJ1.6	HVACpassengers
A47RJ1.6	HVACdefroster	A51RJ1.17	Rrflashers	A54RJ1.17	HVACpassengers
A47RJ1.17	HVACdefroster	A51RJ1.18	WCL	A54RJ1.18	HVACGND
A47RJ1.18	Entrancedoor	A52J1.1	Fansdriveelectric	A54RJ2.2	HVACGND
A47RJ2.2	Entrancedoor	A52J1.3	Fansdriveelectric	A54RJ2.3	HVACpassengers
A47RJ2.3	Upperdef.waterpumpGND	A52J1.4	Lavatory	A55J1.1	Driverlights
A48J1.1	Cornering&foglights	A52J1.7	Engine&RJBcmpt.lights	A55J1.4	Cluster
A48J1.4	Cornering&foglights	A52J1.10	Ignition&enginestart	A55J1.7	Back-upcamera
A48J1.7	Frflashers	A52J2.1	Alternators	A55J2.15	Steering
A48J1.10	Frflashers	A52J2.4	Alternators	A55RJ1.18	Steering
A48J2.1	Frflashers	A52J2.13	Ignition&enginestart	A56J1.3	Cluster
A48J2.4	Frflashers	A52RJ1.17	Lavatory	A56J1.4	Cluster
A48J2.13	Frflashers	A52RJ1.18	Engine&RJBcmpt.lights	A56J1.7	Cluster
A48RJ1.17	Cornering&foglights	A53J1.1	ParcelrackA/Csystem	A56J1.10	Cluster
A48RJ1.18	Frflashers	A53J1.3	ParcelrackA/Csystem	A56J1.13	Multiplexpower
A48RJ2.2	Frflashers	A53J1.4	Lavatory	A56J1.19	12VISS
A49J1.1	Fansdriveelectric	A53J1.7	Curblights	A56J2.15	Lugg_door_lock
A49J1.3	Fansdriveelectric	A53J1.7/10	Curblights	A56RJ1.18	Windowsajar
A49J2.1	Alternators	A53J1.10	Curblights	A57J1.1	WCL
A49J2.10	Preheat	A53J1.13	Lavatory	A57J1.3	WCL
A49J2.13	Brake	A53J2.1	Indirectlights	A57J1.19	WCL
A49RJ2.2	Fansdriveelectric	A53J2.4	Readinglamps&chime	A57RJ1.18	WCL
A50J1.7	Back-upwarnings	A53J2.7	Lavatory	A60_Gnd	VSS
A50J1.13	Rrflashers	A53J2.10	Readinglamps&chime	A60_L+	VSS
A50J1.19	Rrflashers	A53J2.13	Emergency&aislelights	A60_R+	VSS

CIRCUITS LIST

CircuitID	Description	CircuitID	Description	CircuitID	Description
A65_Gnd	VSS	A120A.5	VSS	A151B.2	USB_Gnd
A65_L+	VSS	A120B.3	VSS	A175.12	Alternators
A65_R+	VSS	A120B.4	VSS	A190GND	Wifi_Chassis_Gnd
A77.A	Equalizer	A120B.5	VSS	Alt_LL.2	Alternators
A77.H	Equalizer	A120B.6	VSS	Alt_LR.2	Alternators
A78.3	Equalizer	A120C.4	VSS	Alt_UR.2	Alternators
A78.4	Equalizer	A121A.18	VSS	AltL	Alternators
A79.3	Equalizer	A121B.16	VSS	AltLL	Alternators
A80.3	Equalizer	A121B.17	VSS	AltLR	Alternators
A80.4	Equalizer	A121C.7	VSS	AltR	Alternators
A81JB.4	EngineECUVolvo	A121C.11	VSS	AltUR	Alternators
A81JB.6	ZFsteering	A121C.12	VSS	Audio_Out_HDMI_L+	VSS
A81JB.10	EngineECUVolvo	A121C.13	VSS	Audio_Out_HDMI_R+	VSS
A81JB.15	Ignition&enginestart	A121C.15	VSS	Audio_Out_HDMI_R-L-	VSS
A81JB.16	EngineECUVolvo	A121D.7	VSS	AuxVideoGnd	VSS
A81JB.17	EngineECUVolvo	A130.3	Firesuppression	AuxVideoL	VSS
A81JB.19	EngineECUVolvo	A130.4	Firesuppression	AuxVideoR	VSS
A81JB.22	EngineECUVolvo	A130.6	Firesuppression	B85.2	Ureasystem
A81JB.23	EngineECUVolvo	A130.8	Firesuppression	B97.2	Ureasystem
A81JB.25	EngineECUVolvo	A130.11	Firesuppression	B98.2	Ureasystem
A81JB.26	EngineECUVolvo	A131A.C	Firesuppression	B99.2	Ureasystem
A96.8.Black	TPMS	A131B.A	Firesuppression	B115A.3	Ureasystem
A96.23.Red	TPMS	A131B.C	Firesuppression	BLACK	120VACoutlets
A96.24.Black	TPMS	A137A.4	Ureasystem	Black	Preheat
A96.25.Red	TPMS	A137A.7	Ureasystem	Black.1	Readinglamps&chime
A96.27.Black	TPMS	A137A.8	Ureasystem	Black.3	Readinglamps&chime
A96.28.Red	TPMS	A137A.24	Ureasystem	Black.4	Readinglamps&chime
A100.3.White	TPMS	A137A.28	Ureasystem	BLK1	VSS
A101.3.White	TPMS	A137A.40	Ureasystem	BLK2	VSS
A101.7.White	TPMS	A137A.44	Ureasystem	BussBar	12VDTOCB2
A102.3.White	TPMS	A137A.49	Ureasystem	C41.A	Preheat
A103.1	Steering	A137A.50	Ureasystem	Can_Hi	Can_Network
A103.3	Steering	A137A.51	Ureasystem	Can_Low	Can_Network
A103.5	Horn	A137A.54	Ureasystem	CB1	24WUP
A108.5	TransmissionI_Shift	A137A.56	Ureasystem	CB2	Ignition&enginestart
A108.7	TransmissionI_Shift	A137A.59	Ureasystem	CB3	HVACpassengers
A108.8	TransmissionI_Shift	A137A.62	Ureasystem	CB5	24WUP
A108.9	TransmissionI_Shift	A138.3	Ureasystem	CB6	24VD
A108.10	TransmissionI_Shift	A138.12	Ureasystem	CB8	12WUP
A109A.7	TransmissionI_Shift	A150.GND	VSS	CB9	Preheat
A109A.8	TransmissionI_Shift	A150.L	VSS	CB10	12WUP
A109A.9	TransmissionI_Shift	A150.R	VSS	CB11	VSS
A109A.10	TransmissionI_Shift	A151B.1	USB	CB13	120VACoutlets

CIRCUITS LIST

CircuitID	Description	CircuitID	Description	CircuitID	Description
CB48	Frflashers	EMS.EB29	Ignition&enginestart	F95	ELDITSGateway
CB128	24VD	F4	TransmissionI_Shift	F96	Ureasystem
CB201	Fansdriveelectric	F10	Cluster	F96AH	VSS
CB202	Fansdriveelectric	F11	Horn	F99	EngineECUVolvo
CB203	Fansdriveelectric	F13	Cust_Adapt_Interface	F100	EngineECUVolvo
CB204	Fansdriveelectric	F15	GTCG_Gateway	F101	R1toStarter
CB205	Fansdriveelectric	F16	12VEng.run	F106	Multiplexpower
CB206	Fansdriveelectric	F17	Multiplexpower	F107	Multiplexpower
CB207	Fansdriveelectric	F18	Multiplexpower	F108	Networks
CB208	Fansdriveelectric	F19	Multiplexpower	F109	Engine&RJBcmpt.lights
Cd1	Networks	F20	Multiplexpower	F110	TransmissionAlisson
CTS	Networks	F21	Multiplexpower	F112	Trailerinterface
Cts	Networks	F22	ELDITSGateway	F113	Trailerinterface
D1	Ignition&enginestart	F23	ESP	F117	SparesVECR
D3	Upperwipers	F24	Cust_Adapt_Interface	F121	CCust
D7	Entrancedoor	F25	12Voutlets	F122	Equalizer
D9	Preheat	F26	SparesVECF	F123	Preheat
D12	Horn	F27	SparesVECF	F124	Preheat
D13	Horn	F29	ECUignition	F126	HVACpassengers
D55	Lights	F30	Networks	F127	Preheat
DL0H	Spareswires	F33	Multiplexpower	F129	Preheat
DL0HS	Spareswires	F34	Multiplexpower	F130	Preheat
DL0L	Spareswires	F35	Multiplexpower	F131	CCust
DL0LS	Spareswires	F36	24VDEng.StartSw83	F132	Multiplexpower
DL1H	Networks	F37	Entrancedoor	F133	Multiplexpower
DL1L	Networks	F39	24VDcustomer	F134	Multiplexpower
DL2H	Network	F40	Firesuppression	F135	Multiplexpower
DL2L	Network	F42	TransmissionI_Shift	F136	Multiplexpower
DL3H	Networks	F43	TransmissionI_Shift	F138	Readinglamps&chime
DL3L	Networks	F44	Multiplexpower	F139	Alternators
DL7H	NetworksECU	F45	Multiplexpower	F141	HVACpassengers
DL7L	NetworksECU	F46	Multiplexpower	F142	HVACpassengers
DL9H	NetworksECU	F47	Multiplexpower	F143	HVACpassengers
DL9L	NetworksECU	F50	HVACdefroster	F144	HVACpassengers
DL10H	TPMS	F51	Destinationsigns	F147	CCust
DL10L	TPMS	F52	ELDITSGateway	F148	12VD
DL100H	J1939network	F53	Digitalclock	F152	SparesVECR
DL100L	J1939network	F54	Upperwipers	F156	Unican
DVD_Gnd	VSS	F55	Cust_Adapt_Interface	F199	Fansdriveelectric
DVD_L+	VSS	F57	Destination_Sign_Pwr	F200	VSS
DVD_R+	VSS	F73	EngineECUVolvo	F201	VSS
EI.7	Cluster	F90	Ureasystem	F202	VSS
EI.18	EngineECUVolvo	F91	EngineECUVolvo	F203	VSS

CIRCUITS LIST

CircuitID	Description	CircuitID	Description	CircuitID	Description
F243	HVACpassengers	Mo71.3	Fansdriveelectric	R-	VSS
F307.Blue	VECT	Mo72.3	Fansdriveelectric	R-12VISS	VSS
F612	DVRDigitalVideoRecorder	Mo73.3	Fansdriveelectric	R4.85	Firesuppression
F614	DVRDigitalVideoRecorder	N1	Networks	R4.87A	Preheat
gnd_1	Cantrack	N2	Networks	R5.87	Preheat
Gnd_2	Cantrack	N3	Networks	R12	HVACpassengers
GndA	Networks	N4	Networks	R12.2	HVACpassenger
GREEN	120VACoutlets	N5	Networks	R12VISS	VSS
Green	Preheat	N6	Networks	R20.87	Preheat
GRN1	VSS	N7	Networks	R21.87	RJBoutswitch
GRN2	VSS	N8	Networks	R21.B	Ignition&enginestart
GROUND	Rear_Galley	N9	Networks	R22.87	ECUignition
IN1	Unican_power_option	N10	Networks	R23.30	TransmissionAlisson
IN2	Unican_power_option	N11	Networks	R23A.87A	TransmissionI_Shift
IN3	Unican_power_option	N12	Networks	R25.87	24VIgnition
JMP6-10	Cust_Adaptation	N13	Networks	R26.30	HVACpassengers
JMP_C700	CTGI_Gateway	N14	Networks	R27.87A	Wipers&washer
L+	VSS	N15	Networks	R28.87A	Upperwipers
L-	VSS	N16	Networks	R29	EngineECUVolvo
L142.3	Lavatory	N17	Networks	R30.87	12VEngruncustomer
L207.1	WCL	N18	Networks	R31.87	12VIgncustomer
L207.2	WCLlightsplatform	N19	Networks	R34.30	12VECU
L207.3	WCL	N20	Networks	R36.87	Horn
L207.GND	WCL	N21	Networks	R37.30	Horn
L309	Inverters	N22	Networks	R38.87	12Voutlets
L309D	Inverters_Displays	N23	Networks	R40.87	TransmissionI_Shift
L310	Inverters	N24	Networks	R47.87	WCL
L310D	Inverters_Displays	N25	Networks	R52.87.Black	Traillerinterface
L350A.B2	EngineECUVolvo	N26	Networks	R53.87.Yellow	Traillerinterface
L400.G	Engineheateroutlet	N27	Networks	R54.87.Red	Traillerinterface
L400.L	Engineheateroutlet	N28	Networks	R55.87.Green	Traillerinterface
L400.N	Engineheateroutlet	N29	Networks	R56.87.Brown	Traillerinterface
LF+	VSS	N30	Networks	R_Starter	Ignition&enginestart
LF-	VSS	N31	Networks	Radio_Gnd	Audio
LR+	VSS	N56-1	Networks	Radio_L+	Audio
LR-	VSS	N56-2	Networks	Radio_R+	Audio
Mo62	Roof_Hatch_Fans	N57_1	Networks	Red	USB
Mo63	Roof_Hatch_Fans	N57_2	Networks	RED1	VSS
Mo65.3	Fansdriveelectric	Port1	Cornering & fog lights	RED2	VSS
Mo67.3	Fansdriveelectric	Pot1	Driverlights	Res8	UpperDefrostfan
Mo68.3	Fansdriveelectric	PP1	WCL	Res21	RJBCmpt.light
Mo69.3	Fansdriveelectric	Pull	Pullwire	Res22	Engine&RJBcmpt.lights
Mo70.3	Fansdriveelectric	R+	VSS	RF+	VSS

CIRCUITS LIST

CircuitID	Description	CircuitID	Description	CircuitID	Description
RF-	VSS	Se41	Cond.doorsw.	spare30	Spareswires
RR+	VSS	Se45.2	Wipers&washer	spare31	Spareswires
RR-	VSS	Se46.B	Traillerparkbrake	spare32	Spareswires
RTS	Networks	Se49.B	HVACpassengers	spare33	Spareswires
Rts	Networks	SE51.2	Cluster	spare34	Spareswires
RX	TPMS	Se51.Jmp	Jumper_Se51	spare35	Spareswires
Rx	Cantrack	Se53.C	Cluster	spare39	Spareswires
RxD	Networks	Se54.C	Cluster	spare40	Spareswires
RxTx	Networks	Se55.C	Cluster	spare41	Spareswires
Se2	TransmissionAlisson	Se56.4	WCLsystemGND	spare42	Spareswires
Se4.1	Windowsajar	Se63.1	ESP	spare43	Spareswires
Se11.Sig	Cluster	Se63.2	ESP	spare44	Spareswires
Se11.Wrn	Cluster	Se64.1	ESP	spare64	Spareswires
Se13.B	EngineECUVolvo	Se64.2	ESP	spare65	Spareswires
Se14A.B	EngineECUVolvo	Se67.C	ESP	spare72	Spareswires
Se14B.C	EngineECUVolvo	Se69.C	ESP	spare73	Spareswires
Se15.1	Entrancedoor	Se74.3	TransmissionAlisson	Spk1_L	Speakers
Se17.1	Entrancedoor	Se79.4	Kneeling	Spk1_R	Speakers
Se18.B	Brake	Se89.A	Engine_Ecu	Spk2_L	Speakers
Se19_P.D	Brake	Se94	WCL	Spk2_R	Speakers
Se19_S.D	Brake	Se100.4	WCL	Spk3_L	Speakers
Se20.B	Cluster	Shield_149	GNDstud	Spk3_R	Speakers
Se21.2	HVACdefroster	Shield_149A	GNDstud	Spk4_L	Speakers
Se23.C	HVACpassengers	SHL2	VSS	Spk4_R	Speakers
Se24.2	HVACpassengers	So9.B	HVACpassengers	Spk5_L	Speakers
Se24.3	HVACpassengers	spare10	Spareswires	Spk5_R	Speakers
Se25.2	HVACpassengers	spare11	Spareswires	Spk6_L	Speakers
Se30.A	Engine&RJBcmpt.lights	spare12	Spareswires	Spk6_R	Speakers
Se32.A	TransmissionAlisson	spare13	Spareswires	Spk9_L	Speakers
Se32.B	TransmissionAlisson	spare14	Spareswires	Spk9_R	Speakers
Se33.A	TransmissionAlisson	spare15	Spareswires	Spk10_L	Speakers
Se34.A	TransmissionAlisson	spare16	Spareswires	Spk10_R	Speakers
Se34.B	TransmissionAlisson	spare17	Spareswires	Spk11_L	Speakers
Se35.A	TransmissionAlisson	spare18	Spareswires	Spk11_R	Speakers
Se35.B	TransmissionAlisson	spare19	Spareswires	Spk12_L	Speakers
Se37.1	ESP	spare20	Spareswires	Spk12_R	Speakers
Se37.2	ESP	spare21	Spareswires	Spk13_L	Speakers
Se38.1	ESP	spare22	Spareswires	Spk13_R	Speakers
Se38.2	ESP	spare23	Spareswires	Spk14_L	Speakers
Se39.1	ESP	spare24	Spareswires	Spk14_R	Speakers
Se39.2	ESP	spare25	Spareswires	STO-LOCselenoid	WCL
Se40.1	ESP	spare28	Spareswires	Sw1.5	Frflashers
Se40.2	ESP	spare29	Spareswires	Sw1C258.2	Wipers&washer

CIRCUITS LIST

CircuitID	Description	CircuitID	Description	CircuitID	Description
Sw1C258.3	Wipers&washer	Sw32.3	Entrancedoor	Sw85.B4	Mirrors
Sw1C258.4	Wipers&washer	Sw33.3	Entrancedoor	Sw96.N3	Readinglamps&chime
Sw1C258.6	Wipers&washer	Sw34.1	Entrancedoor	Sw97.N1	Readinglamps&chime
Sw1C258.7	Wipers&washer	Sw34.4	Entrancedoor	Sw100.1	Dockingswith
Sw1C258.8	Frflashers	Sw35.3	EngineECUVolvo	Sw100.3	Cornering&foglights
Sw1C259.1	Frflashers	Sw35.8	EngineECUVolvo	Sw124.3	Destinationsigns
Sw1C259.2	Frflashers	Sw38.2B	Driverwindow	Sw125.B	Kneeling
Sw1C259.4	Frflashers	Sw39	Engine&RJBcmpt.lights	Sw149.2B	ReadinglampsCancelSw
Sw2.3	Frflashers	Sw40.B	Traillerparkbrake	Sw149.3	Readinglamps&chime
Sw2.6	Frflashers	Sw41.A1	Mirrors	Sw149.8	Readinglamps&chime
Sw3.3	Cornering&foglights	Sw41.A3	Mirrors	Sw152.B	Firesuppression
Sw3.8	Cornering&foglights	Sw41.B1	Mirrors	Sw156.1	Mirrors
Sw4.3	Frflashers	Sw41.B2	Mirrors	Sw156.6	Mirrors
Sw4.8	Frflashers	Sw41.B4	Mirrors	Sw156.8	Mirrors
Sw5.3	Upperwiperssw.	Sw42.2	WCL	Sw157.2B	Sunvisor
Sw5.6	Upperwiperssw.	Sw42.3	WCL	Sw158.2B	Sunvisor
Sw6.3	Upperwiperssw.	Sw42.4	WCL	Sw629.3	Destinationsigns
Sw6.4	Wipers&washer	Sw42.5	WCL	Sw629.8	Destinationsigns
Sw10A.2B	Kneeling	Sw42.6	WCL	Sw660.3	Rear_Galley
Sw12.3	Destinationsigns	Sw42.7	WCL	Sw660.Jmp	Galley_Harness
Sw12.8	Destinationsigns	Sw43.B	Kneeling	Sw661.3	Rear_Galley
Sw14.3	EngineECUVolvo	Sw44	Engine&RJBcmpt.lights	Sw661.Jmp	Galley_Harness
Sw14.8	EngineECUVolvo	Sw45	Engine&RJBcmpt.lights	Sw662.3	Cust_Adaptation
Sw16.3	Brake	Sw46	Engine&RJBcmpt.lights	Sw663.3	Rear_Galley
Sw16.8	Brake	Sw55.1	Lavatory	Sw663.6	Rear_Galley
Sw17.3	EngineECUVolvo	Sw56.1	Lavatory	Sw670.8	Readinglamps&chime
Sw17.6	EngineECUVolvo	Sw58.2	Ignition&enginestart	SwPH.1	Driverwindow
Sw18A.2B	Lugg_door_lock	Sw58.3	Engineshutdownsw.	SwPH.2B	Driverwindow
Sw20.3	WCL	Sw58.5	Ignition&enginestart	SwPH.3	Driverwindow
Sw20.8	WCL	Sw58.7	Ignition&enginestart	TWU.3	WCL
Sw21.3	Upperdefrost	Sw59.3	Ignition&enginestart	TX	TPMS
Sw21.8	Upperdefrost	Sw63A.3	Horn	Tx	Cantrack
Sw24.3	Driverlights	Sw63A.4	Horn	TxD	Networks
Sw24.6	Driverlights	Sw64	Kneeling	ve+	Cantrack
Sw25.3	Lightsswitch	Sw82.4	Masterrelay&12VIgn	WHITE	120VACoutlets
Sw25.6	Readinglamps&chime	Sw82.5	Masterrelay&12VIgn	White	Preheat
Sw26.3	Readinglamps&chime	Sw83.Acc	Ignition&enginestart	WHT1	VSS
Sw26.8	Readinglamps&chime	Sw83.Ign	Ignition&enginestart	WHT2	VSS
Sw27.3	ParcelrackA/Csystem	Sw83.St	Ignition&enginestart	YellowGreen	Readinglamps&chime
Sw27.8	ParcelrackA/Csystem	Sw85.A1	Mirrors		
Sw29.2	Readinglamps&chime	Sw85.A3	Mirrors		
Sw29.3	Readinglamps&chime	Sw85.B1	Mirrors		
Sw29.8	Readinglamps&chime	Sw85.B2	Mirrors		

Breakers list

Breakers ID	Location	Part #	Function	Rating	Page
CB1	RJB	563708	24 WUP FJB	90 amp	3.1 Main Disti 2 C
CB2	RJB	568113	12ECU & 12VD FJB	70 amp	3.1 Main Disti 1 C
CB3	RJB	563708	HVAC passengers	90 amp	3.1 Main Disti 2 C
CB5	RJB	563708	24 WUP RJB	90 amp	3.1 Main Disti 2 C
CB6	RJB	568113	24VD RJB & WCL	70 amp	3.1 Main Disti 2 C
CB8	RJB	563708	12 WUP RJB	90 amp	3.1 Main Disti 3 C
CB9	RJB	563707	Battery charger	70 amp	3.1 Main Disti 2 C
CB10	RJB	568114	VECF Power	150 amp	3.1 Main Disti 3 C
CB11	RJB	568127	VSS	50 amp	3.1 Main Disti 3 C
CB13	RJB	568114	120VAC outlets	150 amp	3.1 Main Disti 3 C
CB48	FJB VECF	564464	Wipers	20amp	4.2 Dist 24V FJB 2 C
CB128	RJB VECR	564342	24VD FJB	30amp	5.1 Dist RJB 1 C

Connectors list

Connector ID	Location	Part no	Gender	Connector ID	Location	Part no	Gender
24SS OP	Parcel Rack LH	563071	male	A36.JA	FJB	562767	male
24SS OP	Parcel Rack LH	563040	female	A36.JB	FJB	562765	male
120V inlet	Rear vehicule	561572	male	A36.JC	FJB	562957	male
A1	RJB	563975	male	A39.P101	Parcel Rack LH	563201	male
A2	FJB	563984	male	A39.P901	Parcel Rack LH	563953	male
A3	Dash	562363	male	A60.A	Parcel Rack LH	563071	male
A4.A	Service Cmpt	562428	female	A60.B	Parcel Rack LH	562706	female
A4.B	Service Cmpt	561188	female	A60.C	Parcel Rack LH	901110	male
A5	Service Cmpt	562428	female	A60.D	Parcel Rack LH	901110	male
A6	Engine Cmpt	562427	male	A61.A	Parcel Rack LH	562464	male
A7	Rear Axle Cmpt	563979	male	A61.B	Parcel Rack LH	562465	male
A9.Cx1	FJB	564041	female	A65.A	Parcel Rack LH	563025	male
A9.Cx2	FJB	563678	male	A65.C	Parcel rack	mating 901110	female
A9.Cx3	FJB	564037	female	A65.E	Parcel rack	563071	male
A9.Cx4	FJB	564038	female	A65.G1	Parcel Rack LH	563071	male
A10.X1	Engine Cmpt	563135	male	A65.G2	Parcel Rack LH	563071	male
A10.X3	Engine Cmpt	563134	female	A65.G3	Parcel Rack LH	563071	male
A11	LH Console	563142	male	A65.H1	Parcel Rack LH	561716	female
A14.A	Dash	562766	male	A65.H2	Parcel Rack LH	561716	female
A14.B	Dash	562767	male	A65.H3	Parcel Rack LH	561716	female
A14.C	Dash	562765	male	A65.J	Parcel Rack LH	562465	male
A15	Dash	562464	male	A69L.A	Parcel Rack LH	563025	male
A16	Front Roof	561637	male	A69R.A	Parcel Rack LH	563025	male
A17.D	RJB	561932	male	A70c	Parcel Rack LH	561540	female
A18.J1	FJB	562794	male	A77	Parcel rack	564547	male
A18.J2	FJB	562650	male	A78	Parcel rack	562583	female
A19	LH Console	562878	female	A79	Parcel rack	562583	female
A20	Parcel Rack LH	561477	female	A80	Parcel rack	562479	female
A24.A	RH Console	561890	male	A81.JA	FJB	562767	male
A24.B	RH Console	561566	female	A81.JB	FJB	562765	male
A24.C	RH Console	561889	female	A81.JC	FJB	562957	male
A25	Parcel Rack LH	563025	male	A83	Parcel rack	565970	female
A26.P1	Engine cmpt.	562350	male	A95.B	Parcel rack	562706	female
A26.P2	Engine cmpt.	563322	female	A95.C	Parcel rack	562706	female
A26.P4	Engine cmpt.	568088	male	A96	FJB	564073	female
A27	Service Cmpt	562929	male	A97	Dash	563226	male
A28	Service Cmpt	562928	male	A97A	FJB	563226	male
A29	Dash	562464	male	A97A	FJB	563613	female
A33.A	Parcel Rack LH	563071	male	A97B	FJB	563226	male
A33.B	Parcel Rack LH	562330	female	A97B	FJB	563613	female
A34.J	Engine cmpt.	568118	male	A100	Front Axle Cmpt	563758	female
A34.K	Engine cmpt.	564270	male	A101	Rear RH Axle Cmpt	563758	female
A34.L	Engine cmpt.	564269	male	A102	Rear RH Axle Cmpt	563758	female

Connectors list

Connector ID	Location	Part no	Gender	Connector ID	Location	Part no	Gender
A103	Dash	562070	female	AE42.J3	FJB	564004	male
A107	Engine Cmpt.	560336	male	AE43.J1	FJB	563679	male
A108	RJB	562766	male	AE43.J2	FJB	564037	male
A109A	FJB	564141	male	AE43.J3	FJB	565957	male
A113.A	Parcel Rack LH	563960	male	AE44.J1	FJB	563679	male
A113.B	Parcel Rack LH	563962	male	AE44.J2	FJB	564037	female
A113.C1	Parcel Rack LH	563956	male	AE44.J3	FJB	565957	male
A113.C2	Parcel Rack LH	563957	male	AE45.J1	FJB	563679	male
A113.C3	Parcel Rack LH	563958	male	AE45.J2	FJB	564037	female
A114A	Dash	564252	male	AE45.J3	FJB	565957	male
A120.A	Dashboard	563960	male	AE46.J1	FJB	563679	male
A120.B	Dashboard	563962	male	AE46.J2	FJB	564037	female
A120.C1	Dashboard	563956	male	AE46.J3	FJB	565957	male
A120.C2	Dashboard	563957	male	AE47.J1	RH console	563679	male
A120.C3	Dashboard	563958	male	AE47.J2	RH console	564037	female
A121.Vsa	Dash	563679	male	AE47.J3	RH console	565957	male
A121.Vsb	Dash	563678	male	AE48.J1	RH console	563679	male
A121.Vsc	Dash	564037	male	AE48.J2	RH console	564037	female
A121.Vsd	Dash	564118	male	AE48.J3	RH console	565957	male
A130	Driver Area	563226	male	AE49.J1	RJB	563679	male
A131.A	Engine Cmpt	561782	male	AE49.J2	RJB	564037	male
A131.B	Engine Cmpt	561781	female	AE49.J3	RJB	565957	male
A137A	Condenser cmpt.	20429843	male	AE50.J1	RJB	563679	male
A138	Cond Cmpt	563787	male	AE50.J2	RJB	564037	male
A139	Dash	564501	male	AE50.J3	RJB	565957	male
A150	Parcel rack	21280133	male	AE51.J1	RJB	563679	male
A152.A	Parcel rack	561550	male	AE51.J2	RJB	564037	female
A152.B	Parcel rack	563071	male	AE51.J3	RJB	565957	male
A152.C	Parcel rack	563071	male	AE52.J1	RJB	563679	male
A152.D	Parcel rack	563071	male	AE52.J2	RJB	564037	female
A152.E	Parcel rack	563071	male	AE52.J3	RJB	565957	male
A152.F	Parcel rack	563071	male	AE53.J1	Parcel rack	563679	male
A152.G	Parcel rack	563071	male	AE53.J2	Parcel rack	564037	female
A152.H	Parcel rack	563071	male	AE53.J3	Parcel rack	565957	male
A152.I	Parcel rack	563071	male	AE54.J1	Evaporator cmpt.	563679	male
A152.J	Parcel rack	563071	male	AE54.J2	Evaporator cmpt.	564037	female
A152.K	Parcel rack	562779	male	AE54.J3	Evaporator cmpt.	565957	male
A152.L	Parcel rack	562779	male	AE55.J1	Dash	563679	male
AE41.J1	FJB	563679	male	AE55.J2	Dash	564037	female
AE41.J2	FJB	564037	female	AE55.J3	Dash	564004	male
AE41.J3	FJB	564004	male	AE56.J1	Dash	563679	male
AE42.J1	FJB	563679	male	AE56.J2	Dash	564037	male
AE42.J2	FJB	564037	female	AE56.J3	Dash	564004	male

Connectors list

Connector ID	Location	Part no	Gender	Connector ID	Location	Part no	Gender
AE57.J1	WCL cmpt.	563679	male	C6	FJB	563583	female
AE57.J2	WCL cmpt.	564037	male	C7	Service Cmpt	562581	male
AE57.J3	WCL cmpt.	564004	male	C7	Service Cmpt	562583	female
AltLL.A	Engine cmpt.	563746	female	C8	FJB	563227	male
AltLL.B	Engine cmpt.	560815	female	C8	FJB	563614	female
AltLL.C	Engine cmpt.	564469	female	C9	RJB	561986	male
AltLR.A	engine cmpt.	563746	female	C9	RJB	561987	female
AltLR.B	Engine cmpt.	560815	female	C10	Engine Cmpt	562581	male
AltLR.C	Engine cmpt.	564469	female	C10	Engine Cmpt	562583	female
AltUR.A	Engine cmpt.	563746	female	C11	Service Cmpt	563580	male
AltUR.B	Engine cmpt.	560815	female	C11	Service Cmpt	563581	female
AltUR.C	Engine cmpt.	564469	female	C12	Engine Cmpt	562581	male
B85	Engine Cmpt	563815	male	C12	Engine Cmpt	562583	female
B96	Engine Cmpt	563821	male	C13 plug	RH Console	563589	male
B96B	Engine Cmpt	563823	male	C13 socket	RH Console	563590	female
B97	Engine Cmpt	563816	male	C13S	RH Console	563589	male
B98	Engine Cmpt	563817	male	C13S	RH Console	563590	female
B115A	Engine cmpt.	564226	male	C14	WCL system	561550	male
B142C	Condenser cmpt.	563793	male	C14	WCL system	561667	female
B310	Engine cmpt.	565967	male	C15A	Evapotator cmpt.	568110	male
C1	FJB	563589	male	C15A	Evaporatot cmpt.	568109	female
C1	FJB	563590	female	C16	RJB	561577	male
C1S	FJB	563589	male	C16	RJB	561605	female
C1S	FJB	563590	female	C17	RJB	560195	male
C2	Service Cmpt	563580	male	C17	RJB	560169	female
C2	Service Cmpt	563581	female	C18	FJB	561986	male
C2A	FJB	563580	male	C18	FJB	561987	female
C2A	FJB	563581	female	C19	RJB	561986	male
C3 plug	RJB	563589	male	C19	RJB	561987	female
C3 socket	RJB	563590	female	C20A	Evap Cmpt	562485	male
C3AP	FJB	563589	male	C20A	Evap Cmpt	562486	female
C3AP	FJB	563590	female	C20B	Evap Cmpt	562485	male
C3AS	FJB	563589	male	C20B	Evap Cmpt	562486	female
C3AS	FJB	563590	female	C23	Evaporator cmpt.	564034	male
C3S	RJB	563593	male	C23	Evaporator cmpt.	564035	female
C3S	RJB	563590	female	C24 plug	Evap Cmpt	561690	male
C4	FJB	563580	male	C24 socket	Evap Cmpt	561566	female
C4	FJB	563581	female	C25	Parcel Rack LH	561550	male
C5	FJB	563589	male	C25	Parcel Rack LH	561667	female
C5	FJB	563590	female	C26	Urea cmpt.	563226	male
C5S	FJB	563589	male	C26	Urea cmpt.	563613	female
C5S	FJB	563590	female	C26A	Urea cmpt.	568110	male
C6	FJB	563582	male	C26A	Urea cmpt.	568109	female

Connectors list

Connector ID	Location	Part no	Gender	Connector ID	Location	Part no	Gender
C26B	Urea cmpt.	563227	male	C49	FJB	561714	female
C26B	Urea cmpt.	563614	female	C50	RJB	568110	male
C29	4rd Lugg Cmpt	563651	male	C50	RJB	568109	female
C29	3rd Lugg Cmpt	563652	female	C51	Engine cmpt.	564034	male
C30	3rd Lugg Cmpt	561710	male	C51	Engine cmpt.	560034	female
C30	3rd Lugg Cmpt	561709	female	C54	Engine Cmpt.	563226	male
C31W plug	Parcel rack	561515	male	C54	Engine Cmpt.	563613	female
C31W socket	Parcel rack	561552	female	C54A	Urea cmpt.	568110	male
C32	lavatory	561734	male	C54A	Urea cmpt.	568109	female
C32	Lavatory	561735	female	C54B	Engine Cmpt.	562477	male
C32W	WCL cmpt.	561669	male	C54B	Engine Cmpt.	562479	female
C32W	WCL cmpt.	561670	female	C55	Evap Cmpt	561577	male
C33	WCL cmpt.	564034	male	C55	Evap Cmpt	561605	female
C33	WCL cmpt.	564035	female	C58 plug	Condensor cmpt.	564567	male
C33W	WCL cmpt.	561515	male	C58 socket	Condensor cmpt.	564568	female
C33W	WCL cmpt.	561552	female	C59	RJB	561643	male
C34	RH Console	561986	male	C59	RJB	561642	female
C34	RH Console	561987	female	C62	Fr Service Door	562566	male
C36	FJB	561986	male	C62	Fr Service Door	562565	female
C36	FJB	561987	female	C63	Entrace Door	562581	male
C37	Parcel Rack LH	562557	male	C63	Entrace Door	562583	female
C37	Parcel Rack LH	562558	female	C64	Engine cmpt.	568110	male
C38	Parcel rack	562555	male	C64	Engine cmpt.	568109	female
C38	Parcel rack	562556	female	C66 plug	Evap Cmpt	561577	male
C39	Parcel rack	562503	male	C66 socket	Evap Cmpt	561605	female
C39	Parcel rack	562507	female	C67	Parcel rack	561734	male
C39A	Fire suppression cmpt.	561782	male	C67	Parcel rack	561735	female
C39A	Fire suppression cmpt.	561781	female	C70	FJB	562557	male
C40	Dash	562485	male	C70	FJB	562558	female
C40	Dash	562486	female	C70A	FJB	561637	male
C41	RJB	561782	male	C70A	FJB	561636	female
C41	RJB	561781	female	C71	FJB	561646	male
C44 plug	FJB	561577	male	C71	FJB	561645	female
C44 socket	FJB	561605	female	C72	FJB	561646	male
C45	FJB	561643	male	C72	FJB	561645	female
C45	FJB	561642	female	C74	FJB	561645	female
C46	3rd lugg. cmpt.	562549	male	C74	FJB	561646	male
C46	3rd lugg. cmpt.	562550	female	C81	1st Lugg Cmpt	562477	male
C47	FJB	565207	male	C81	1st Lugg Cmpt	562479	female
C47	FJB	mating 565207	female	C82	1st Lugg Cmpt	562477	male
C48	RJB	565208	male	C82	1st Lugg Cmpt	562479	female
C48	RJB	mating 565208	femle	C83	2nd Lugg Cmpt	562477	male
C49	FJB	562005	male	C83	2nd Lugg Cmpt	562479	female

Connectors list

Connector ID	Location	Part no	Gender	Connector ID	Location	Part no	Gender
C84	2nd Lugg Cmpt	562477	male	C110	Dash	568109	female
C84	2nd Lugg Cmpt	562479	female	C112	RJB	562284	male
C85	4th lugg. cmpt.	562477	male	C112	RJB	562281	female
C85	4th lugg. cmpt.	562479	female	C119A	Rear engine door	568110	male
C86 plug	4th lugg. cmpt.	563618	male	C119A	Rear engine door	568109	female
C86 socket	4th lugg. cmpt.	563616	female	C131A	Engine Cmpt	561782	male
C87	Engine Cmpt	562485	male	C131A	Engine Cmpt	561781	female
C87	Engine Cmpt	562486	female	C131B	Engine Cmpt	561782	male
C88	WCL Cmpt.	563226	male	C131B	Engine Cmpt	561781	female
C88	WCL Cmpt.	563613	female	C144	RJB	560852	male
C90	RJB	563582	male	C144	RJB	560851	female
C90	RJB	563583	female	C152	Cond Cmpt	561611	male
C91	RJB	562285	male	C152	Cond Cmpt	561610	female
C91	RJB	562282	female	C170	LH Console	561637	male
C94 plug	FJB	563589	male	C170	LH Console	561636	female
C94 socket	FJB	563590	female	C171	LH Console	561646	male
C96	FJB	561646	male	C171	LH Console	561645	female
C96	FJB	561645	female	C193 plug	RJB	563589	male
C97	FJB	561643	male	C193 socket	RJB	563590	female
C97	FJB	561642	female	C194	FJB	563589	male
C99	Engine cmpt.	562581	male	C194	FJB	563590	female
C99	Engine cmpt.	562583	female	C194spA	FJB	563589	male
C100	Evaporator cmpt.	562477	male	C194spA	FJB	563590	female
C100	Evaporator cmpt.	562479	female	C194spB	FJB	563589	male
C100S	Evaporator Cmpt.	562477	male	C194spB	FJB	563590	female
C100S	Evaporator Cmpt.	562479	female	C206	Parcel Rack RH	562503	male
C101	Service Cmpt	561690	male	C206	Parcel Rack RH	562507	female
C101	Service Cmpt	561566	female	C207	Parcel Rack LH	562503	male
C102A plug	Condensor cmpt.	563226	male	C207	Parcel Rack LH	562507	female
C102A socket	Condensor cmpt.	563613	female	C213	Parcel Rack LH	561515	male
C103 plug	FJB	562485	male	C213	Parcel Rack LH	561552	female
C103 socket	FJB	562486	female	C222	FJB	562477	male
C105 plug	FJB	562581	male	C222	FJB	562479	female
C105 socket	FJB	562583	female	C223	FJB	563227	male
C106 plug	FJB	562581	male	C223	FJB	563614	female
C106 socket	FJB	562583	female	C224	FJB	561637	male
C107A	Engine cmpt.	562885	female	C224	FJB	561636	female
C107A	Engine cmpt.	562884	female	C225	FJB	562650	male
C107B	Engine cmpt.	562885	female	C225	FJB	562649	female
C107B	Engine cmpt.	562884	female	C226	FJB	562650	male
C107C	Engine cmpt.	562885	female	C226	FJB	562649	female
C107C	Engine cmpt.	562884	female	C250	Parcel Rack	564208	male
C110	Dash	568110	male	C250	Parcel Rack	mating 564208	female

Connectors list

Connector ID	Location	Part no	Gender	Connector ID	Location	Part no	Gender
C251	Driver Area	562549	male	C430	LH Console	561188	female
C251	Driver Area	562550	female	C452	Dash	561669	male
C266	Parcel rack	561782	male	C452	Dash	561670	female
C266	Parcel rack	561781	female	C463	Rear axle cmpt.	568111	male
C267	Parcel rack	561782	male	C463	Rear axle cmpt.	568112	female
C267	Parcel rack	561781	female	C464	FJB	564222	male
C279	Service Cmpt	562477	male	C464	FJB	564224	female
C279	Service Cmpt	562479	female	C464A	Dash	564222	male
C280	Parcel Rack	562549	male	C464A	Dash	564224	female
C280	Parcel Rack	562550	female	C464B	FJB	564222	male
C284	Parcel Rack	561782	male	C464B	FJB	564224	female
C284	Parcel Rack	561781	female	C465	Parcel rack	562581	male
C284 1	Parcel Rack	561782	male	C465	Parcel rack	562583	female
C284 1	Parcel Rack	561781	female	C506	FJB	561687	male
C284 2	Parcel Rack	561782	male	C506	FJB	561685	female
C284 2	Parcel Rack	561781	female	C506spA	FJB	561687	male
C284 3	Parcel Rack	561782	male	C506spA	FJB	561685	female
C284 3	Parcel Rack	561781	female	C506spB	FJB	561687	male
C284 4	Parcel Rack	561782	male	C506spB	FJB	561685	female
C284 4	Parcel Rack	561781	female	C542	Parcel rack	561550	male
C284 5	Parcel Rack	561782	male	C542	Parcel rack	561667	female
C284 5	Parcel Rack	561781	female	C558	Parcel rack	562503	male
C284 6	Parcel Rack	561782	male	C558	Parcel rack	562507	female
C284 6	Parcel Rack	561781	female	C564	Parcel rack	562503	male
C298	Parcel rack	561782	male	C564	Parcel rack	562507	female
C298	Parcel rack	561781	female	C564 Sp	Parcel rack	562503	male
C333	Upper front	561550	male	C564 Sp	Parcel rack	562507	female
C333	Upper front	561667	female	C566	Parcel rack	562503	male
C355	RJB	563582	male	C566	Parcel rack	562507	female
C355	RJB	565887	female	C567	Parcel rack	562503	male
C356	Parcel rack	561710	male	C567	Parcel rack	562507	female
C356	Parcel rack	561709	female	C575	Parcel Rack RH	562503	male
C357	Parcel rack	561847	male	C575	Parcel Rack RH	562507	female
C357	Parcel rack	561862	female	C576B	Parcel Rack RH	562006	male
C380A	Dash	564222	male	C576B	Parcel Rack RH	560908	female
C380A	Dash	564224	female	C576BB	Parcel rack	562006	male
C381	Parcel Rack	561847	male	C576BB	Parcel rack	560908	female
C381	Parcel Rack	561862	female	C577A	Parcel Rack	562006	male
C382	Under Seat	561580	male	C577A	Parcel Rack	560908	female
C382	Under Seat	561582	female	C577AA	Parcel rack	562006	male
C397	RJB	562285	male	C577AA	Parcel rack	560908	female
C397	RJB	562282	female	C578	Parcel Rack LH	562503	male
C430	LH Console	562363	male	C578	Parcel Rack LH	562507	female

Connectors list

Connector ID	Location	Part no	Gender	Connector ID	Location	Part no	Gender
C582	FJB	561690	female	C AUX	Parcel rack	563040	female
C582	FJB	561566	female	C INV1	Parcel rack	562337	male
C601	LH Roof Win Ajar	561476	male	C INV1	Parcel rack	562338	male
C601	LH Roof Win Ajar	561477	female	C INV2	Parcel rack	562337	male
C602	RH Roof Win Ajar	561476	male	C INV2	Parcel rack	562338	male
C602	RH Roof Win Ajar	561477	female	C LineOut	Parcel rack	563962	male
C603	RH Roof Win Ajar	561476	male	C LineOut	Parcel rack	564489	female
C603	RH Roof Win Ajar	561477	female	C Mo9	Evap Cmpt	561577	male
C614	Passenger Area	563071	male	C Mo9	Evap Cmpt	561605	female
C614	Passenger Area	563040	female	C USB	Parcel Rack	562069	male
C615	Passenger Area	563071	male	C USB	Parcel Rack	562070	female
C615	Passenger Area	563040	female	C VIDEO AUX plug	Parcel rack	562557	male
C617	Mirror LH	563801	male	C VIDEO AUX socket	Parcel rack	562558	female
C617	Mirror LH	563800	female	CCAN1	FJB	562650	male
C618	Mirror RH	563801	male	CCAN1	FJB	562649	female
C618	Mirror RH	563800	female	CCAN2	FJB	562650	male
C752 plug	Parcel Rack	901062	male	CCAN2	FJB	562649	female
C752 socket	Parcel Rack	901283	female	CCAN3	FJB	562650	male
C753 plug	Parcel Rack	901062	male	CCAN3	FJB	562649	female
C753 socket	Parcel Rack	901283	female	CCAN4	FJB	562650	male
C766	Parcel rack	561662	male	CCAN4	FJB	562649	female
C766	Parcel rack	561661	female	CCust	RJB	562477	male
C768	Parcel Rack	901062	male	CCust	RJB	562479	female
C768	Parcel Rack	901283	female	CFHAC plug	Condensor cmpt.	564238	male
C769	Parcel Rack	901062	male	CFHAC socket	Condensor cmpt.	mating 564238	female
C769	Parcel Rack	901283	female	CFHPR1	Parcel rack	564560	male
C777	Dash	562477	male	CFHPR1	Parcel rack	mating 564560	female
C777	Dash	562479	female	CIND-1.A	Parcel rack	560908	female
C A60DB	Parcel Rack	563071	male	CIND-1.B	Parcel rack	560908	female
C A60DB	Parcel Rack	563040	female	CIND-2.A	Parcel rack	560908	female
C A69R	Parcel Rack	563025	male	CIND-2.B	Parcel rack	560908	female
C A69R	Parcel Rack	mating 563025	female	CIND-11.A	Parcel rack	560908	female
C ALT	Engine cmpt.	562581	male	CIND-11.B	Parcel rack	560908	female
C ALT	Engine cmpt.	562583	female	CINDWC-1.A	Parcel rack	560908	female
C ALT3	Engine cmpt.	562477	male	CINDWC-1.B	Parcel rack	560908	female
C ALT3	Engine cmpt.	562479	female	CL1	FJB	562485	male
C AUDIO AUX	Parcel Rack	562557	male	CL1	FJB	562486	female
C AUDIO AUX	Parcel Rack	562558	female	CP1	Passenger Area	561782	male
C Audio HDMI L	Parcel Rack	901062	male	CP1	Passenger Area	561781	female
C Audio HDMI L	Parcel Rack	901283	female	CP2	Passenger Area	561782	male
C Audio HDMI R	Parcel Rack	901062	male	CP2	Passenger Area	561781	female
C Audio HDMI R	Parcel Rack	901283	female	CP3	Passengers area	561782	male
C AUX	Parcel rack	563071	male	CP3	Passengers area	561781	female

Connectors list

Connector ID	Location	Part no	Gender	Connector ID	Location	Part no	Gender
CP4	Passenger Area	561782	male	L30A.A	Parcel rack	560898	male
CP4	Passenger Area	561781	female	L30B.A	Parcel rack	560898	male
CP5	Passenger Area	561782	male	L31	Parcel rack	560898	male
CP5	Passenger Area	561781	female	L32	Parcel rack	560898	male
CP6	Passengers area	562337	male	L33	Parcel rack	560898	male
CP6	Passengers area	562338	male	L34	Parcel rack	560898	male
CSe23 plug	Condensor cmpt.	562477	male	L35	Parcel rack	560898	male
CSe23 socket	Condensor cmpt.	562479	female	L36	Parcel rack	560898	male
CSo53	Rear axle cmpt.	561690	male	L37	Parcel rack	560898	male
CSo53	Rear axle cmpt.	561566	female	L38	Parcel rack	560898	male
CSw102	Rear vehicule	562549	male	L39	Parcel rack	560898	male
CSw102	Rear vehicule	562550	female	L40	Parcel rack	560898	male
CSX1	Engine Cmpt	563135	male	L41	Parcel rack	560898	male
CSX1	Engine Cmpt	563134	female	L42	Parcel rack	560898	male
CSX3	Engine Cmpt	563135	male	L43	Parcel rack	560898	male
CSX3	Engine Cmpt	563134	female	L44	Parcel rack	560898	male
CT2 plug	Engine Cmpt	563226	male	L45	Parcel rack	560898	male
CT2 socket	Engine Cmpt	563613	female	L46	Parcel rack	560898	male
CT3	Rear Vehicle	563224	male	L47	Parcel rack	560898	male
CT3	Rear Vehicle	mating 563224	female	L48	Parcel rack	560898	male
CT IN	Rear Vehicle	560167	male	L49	Parcel rack	560898	male
CT IN	Rear Vehicle	560159	female	L50	Parcel rack	560898	male
CT Out	Rear Vehicle	mating 560233	male	L51	Parcel rack	560898	male
CT Out	Rear Vehicle	560233	female	L52	Parcel rack	560898	male
EI	Engine cmpt.	563739	male	L52	Parcel rack	560900	female
L1A	Engine cmpt.	564045	female	L52A	Parcel rack	560898	male
L16.A	Front roof	562615	female	L53	Parcel rack	560898	male
L16.B	Front roof	562615	female	L53	Parcel rack	560900	female
L17.A	Front roof	562615	female	L53A	Parcel rack	560898	male
L17.B	Front roof	562615	female	L54	Parcel rack	560898	male
L18	Entrance Door	562549	male	L54	Parcel rack	560900	female
L19	Entrace door	562549	male	L54A	Parcel rack	560898	male
L20	Entrace door step	562549	male	L55	Parcel rack	560898	male
L21	Upper front	562486	female	L55	Parcel rack	560900	female
L22	Upper front	562486	female	L55A	Parcel rack	560898	male
L23	Upper front	562486	female	L56	Parcel rack	560898	male
L24	Upper front	562486	female	L56	Parcel rack	560900	female
L25	Upper front	562486	female	L56A	Parcel rack	560898	male
L26	Upper front	562486	female	L57	Parcel rack	560898	male
L27	Upper front	562486	female	L57	Parcel rack	560900	female
L28	Parcel rack	560898	male	L57A	Parcel rack	560898	male
L29	Parcel rack	560898	male	L58	Parcel rack	560898	male
L30	Parcel rack	560898	male	L58	Parcel rack	560900	female

Connectors list

Connector ID	Location	Part no	Gender	Connector ID	Location	Part no	Gender
L58A	Parcel rack	560898	male	L147	Parcel rack	561186	male
L63	Front Side LH	562155	male	L148	Parcel rack	561186	male
L64	Outside Front RH	562155	male	L149	Parcel rack	561186	male
L65	Outside Front LH	562155	male	L150	Parcel rack	561186	male
L66	Out Side Front LH	562155	male	L151	Parcel rack	561186	male
L67	4th Lugg Cmpt	562155	male	L152	Parcel rack	561186	male
L68	4th Lugg Cmpt	562155	male	L153	Parcel rack	561186	male
L69	4th Lugg Cmpt	562155	male	L154	Parcel rack	561186	male
L70	4th Lugg Cmpt	562155	male	L155	Parcel rack	561186	male
L72	Rear Vehicle	562155	male	L156	Parcel rack	561186	male
L74	Rear Vehicle	562155	male	L157	Parcel rack	561186	male
L75	Rear engine door	562155	male	L158	Parcel rack	561186	male
L76	Rear engine door	562155	male	L173	Parcel rack	563590	female
L81.A	Rear Vehicle	562835	female	L174A	Parcel rack	563590	female
L81.B	Rear Vehicle	562834	male	L175	Engine Cmpt.	563590	female
L82A	Rear vehicule	562348	female	L176	5th Lugg Cmpt	561247	male
L83A	Rear vehicule	562348	female	L177	5th Lugg Cmpt	561247	male
L84	Rear roof	562486	female	L178	3rd Lugg Cmpt	561247	male
L85	Rear roof	562486	female	L179	3rd Lugg Cmpt	561247	male
L86	Rear roof	562486	female	L180	2nd Lugg Cmpt	561247	male
L87	Rear roof	562486	female	L181	2nd Lugg Cmpt	561247	male
L88	Rear roof	562486	female	L182	1st Lugg Cmpt	561247	male
L89	Rear roof	562486	female	L183	1st Lugg Cmpt	561247	male
L90	Rear roof	562486	female	L184	Service cmpt.	561247	male
L93.A	Engine Cmpt.	563069	female	L185.A	Service cmpt.	561539	male
L93.B	Engine Cmpt.	563069	female	L185.B	Service cmpt.	561539	male
L94.A	Engine Cmpt.	563069	female	L186.A	Dash	561539	male
L94.B	Engine Cmpt.	563069	female	L186.B	Dash	561539	male
L95	Outside Front LH	562485	male	L187	Engine Cmpt	561690	male
L95A	Outside Front LH	562485	male	L188	Service Cmpt	562486	female
L96	Outside Front RH	562485	male	L193.A	Dash	560488	female
L96A	Outside Front RH	562485	male	L193.B	Dash	560488	female
L97.A	Outside Front LH	563069	female	L194.A	Dash	562019	female
L97.B	Outside Front LH	563069	female	L194.B	Dash	560488	female
L98.A	Entrance Door	563069	female	L195.A	Dash	560488	female
L98.B	Outside Front RH	563069	female	L195.B	Dash	560488	female
L140	Lavatory	561247	male	L199	Engine cmpt.	562848	male
L141	Upper front	561247	male	L201	Upper front	561247	male
L142	Lavatory	562006	male	L202	Upper front	561247	male
L143	Parcel rack	561186	male	L203	RH Console	561690	male
L144	Parcel rack	561186	male	L204	Parcel Rack RH	562803	male
L145	Parcel rack	561186	male	L205	Engine cmpt.	562485	male
L146	Parcel rack	561186	male	L206	Parcel Rack RH	562803	male

Connectors list

Connector ID	Location	Part no	Gender	Connector ID	Location	Part no	Gender
L207.A	3rd lugg. cmpt.	mating 561699	male	Mic Driver 3.A	Parcel rack	560999	male
L207.B	3rd lugg. cmpt.	mating 561699	male	Mic Guide 1.A	Parcel rack	560999	male
L207.C	3rd lugg.cmpt.	mating 561701	male	Mic Guide 2.A	Parcel rack	560999	male
L207.D	3rd lugg. cmpt.	mating 561699	male	Mic Guide 3.A	Parcel rack	560999	male
L207.E	3rd lugg. cmpt.	mating 561701	male	Mo3	Dash	561667	female
L207.F	3rd lugg. cmpt.	mating 561699	male	Mo4	Dash	562076	male
L207.G	3rd lugg. cmpt.	mating 561699	male	Mo5	Upper front	561550	male
L207.H	3rd lugg. cmpt.	mating 560926	male	Mo6	Front vehicle	561690	male
L207.I	3rd lugg. cmpt.	mating 560926	male	Mo7	Cond Cmpt	563691	male
L211	Entrace Door step	562549	male	Mo8	Cond Cmpt	563691	male
L243	Parcel rack	561186	male	Mo10	Parcel rack	561515	male
L244	Parcel rack	561186	male	Mo11	Parcel rack	561515	male
L245	Parcel rack	561186	male	Mo12	Engine Cmpt	561690	male
L246	Parcel rack	561186	male	Mo13	Engine Cmpt	561690	female
L247	Parcel rack	561186	male	Mo14	Engine Cmpt	561566	female
L248	Parcel rack	561186	male	Mo15	Front Ceiling	560900	female
L249	Parcel rack	561186	male	Mo16	Front Ceiling	560900	female
L250	Parcel rack	561186	male	Mo17	RH Console	563626	male
L251	Parcel rack	561186	male	Mo18	Fr Service Door	562474	male
L252	Parcel rack	561186	male	Mo19	Fr Service Door	562474	male
L253	Parcel rack	561186	male	Mo20	Fr Service Door	562474	male
L254	Parcel rack	561186	male	Mo21	Upper front	561186	male
L255	Parcel rack	561186	male	Mo22	RH Console	561186	male
L256	Parcel rack	561186	male	Mo24	RH Console	562348	female
L257	Parcel rack	561186	male	Mo25	RH Console	562348	female
L258	Parcel rack	561186	male	Mo27	Cond Cmpt	563691	male
L282	Engine Cmpt	561690	male	Mo28	Cond Cmpt	563691	male
L285.A	Rear Vehicle	562835	female	Mo54	Service Cmpt	562474	male
L285.B	Rear Vehicle	562834	male	Mo61	Parcel rack	561248	female
L286.A	Rear Vehicle	562835	female	Mo65	Engine cmpt.	568089	male
L286.B	Rear Vehicle	562834	male	Mo67	Engine cmpt.	568089	male
L290	Engine door	562565	female	Mo68	Engine cmpt.	568089	male
L291	Engine door	562565	female	Mo69	Engine cmpt.	568089	male
L298A	Engine cmpt.	563590	female	Mo70	Engine cmpt.	568089	male
L306	RJB cmpt.	561247	male	Mo71	Engine cmpt.	568089	male
L314	Front vehicle	562789	male	Mo72	Engine cmpt.	568089	male
L315	Front vehicle	562789	male	Mo73	Engine cmpt.	568089	male
L319	Under WCL platform	561247	male	P In1	Passenger Area	561782	male
L350A.A	Rear axle cmpt.	564552	male	P In1	Passenger Area	561781	female
L350A.B	Rear axle cmpt.	563340	male	P Out1	Passenger Area	561782	male
L350A.C	Rear axle cmpt.	562251	male	P Out1	Passenger Area	561781	female
Mic Driver 1.A	Parcel rack	560999	male	P Out2	Passenger Area	561782	male
Mic Driver 2.A	Parcel rack	560999	male	P Out2	Passenger Area	561781	female

Connectors list

Connector ID	Location	Part no	Gender	Connector ID	Location	Part no	Gender
P Out3	Passenger Area	561782	male	RadioVolvo3 933.A	Parcel rack	563960	male
P Out3	Passenger Area	561781	female	RadioVolvo3 933.B	Parcel rack	563962	male
PC1	FJB	562650	male	RadioVolvo3 933.C1	Parcel rack	563956	male
PC1	FJB	562649	female	RadioVolvo3 933.C2	Parcel rack	563957	male
PF	FJB	561782	male	RadioVolvo3 933.C3	Parcel rack	563958	male
PF	FJB	561781	female	Res3.A	RJB	563590	female
PF1	Passenger Area	561782	male	Res4	FJB	563590	female
PF1	Passenger Area	561781	female	Res6	FJB	563590	female
Pot1.A	Dash	560488	female	Res6A	FJB	563589	male
Pot1.B	Dash	560488	female	Res6A	FJB	563590	female
Pot1.C	Dash	560488	female	Res6B	FJB	563589	male
PR	Parcel rack	561782	male	Res6B	FJB	563590	female
PR	Parcel rack	561781	female	Res15	Engine Cmpt	561782	male
PR1	Passenger Area	561782	male	Res31	Urea cmpt.	562350	male
PR1	Passenger Area	561781	female	Res32	Urea cmpt.	563764	female
R3	RJB	563409	male	Se4	Window RH	561477	female
R4	FJB	564496	male	Se5	Window RH	561477	female
R5	RJB	564496	male	Se6	Window RH	561477	female
R12	Evap Cmpt	563409	male	Se7	Window LH	561477	female
R20	RJB	564496	male	Se8	Window LH	561477	female
R26	Evap Cmpt	564496	male	Se9	Window LH	561477	female
R27	Dash	564496	male	Se10	FJB	561477	female
R28	FJB	564496	male	Se11.A	Cond Cmpt	560082	female
R29	RJB	563409	male	Se11.B	Cond Cmpt	560082	female
R30	FJB	564496	male	Se11.C	Cond Cmpt	560082	female
R31	FJB	564496	male	Se13	Engine Cmpt	562350	male
R34	RJB	564210	male	Se14.A	Driver Area	561782	male
R36	Dash	564496	male	Se14.B	Driver Area	561781	female
R37	Dash	564496	male	Se15	RH Console	560898	male
R38	FJB	564496	male	Se17	Entrace Door	560081	female
R40	RJB	564496	male	Se18	Service cmpt.	561566	female
R47	Parcel rack	564496	male	Se19 P	Service Cmpt	563677	male
R 12VISS	Parcel rack	564496	male	Se19 S	Service Cmpt	563677	male
RadioVolvo1 933.A	Parcel rack	563960	male	Se20	Evap Cmpt	562426	male
RadioVolvo1 933.B	Parcel rack	563962	male	Se21	Dash	561248	female
RadioVolvo1 933.C1	Parcel rack	563956	male	Se23	Engine Cmpt	563159	male
RadioVolvo1 933.C2	Parcel rack	563957	male	Se24	Evap Cmpt	563758	female
RadioVolvo1 933.C3	Parcel rack	563958	male	Se25	Passenger Area	561248	female
RadioVolvo2 933.A	Parcel rack	563960	male	Se28	Pneumatic plate	562348	female
RadioVolvo2 933.B	Parcel rack	563962	male	Se29	Engine Cmpt	561566	female
RadioVolvo2 933.C1	Parcel rack	563956	male	Se30	Engine door	562877	female
RadioVolvo2 933.C2	Parcel rack	563957	male	Se31	Engine door	562877	female
RadioVolvo2 933.C3	Parcel rack	563958	male	Se32	Rear Axle Cmpt	562426	male

Connectors list

Connector ID	Location	Part no	Gender	Connector ID	Location	Part no	Gender
Se33	Rear Axle Cmpt	562856	male	So23	Rear Axle Cmpt	564046	female
Se34	Rear Axle Cmpt	562426	male	So24	Rear Axle Cmpt	564046	female
Se35	Rear Axle Cmpt	562426	male	So27	Rear axle cmpt.	564045	female
Se36	Rear Axle Cmpt	562427	male	So50	Rear axle cmpt.	564046	female
Se37	Front Axle LH	641132	female	So52	Rear axle cmpt.	564045	female
Se38	Front Axle RH	641132	female	So54	Engine cmpt.	564045	female
Se39	Rear Axle LH	641132	female	spBar4	Engine cmpt.	564135	male
Se40	Rear Axle LH	641132	female	spBar5	Engine cmpt.	564135	male
Se41	Condensor cmpt.	562877	female	spBar6	Engine cmpt.	564135	male
Se45	Service cmpt.	563409	male	spBar7	Engine cmpt.	564135	male
Se46	Rear axle cmpt.	562348	female	spBar11	Engine Cmpt.	564135	male
Se53	Service Cmpt	563159	female	spBar12	Engine Cmpt.	564135	male
Se54	Service Cmpt	563159	female	spBar13	Engine cmpt.	564135	male
Se55	Service Cmpt	563159	female	spBar14	Engine cmpt.	564135	male
Se60	Service Cmpt	563409	male	spBar15	Engine cmpt.	564135	male
Se63	Rear axle cmpt.	641132	female	spBar16	Engine cmpt.	564135	male
Se64	Rear axle cmpt.	641132	female	spBar19	Condensor cmpt.	564135	male
Se65	Dash	564042	female	spBar20	Condensor cmpt.	564135	male
Se66	FJB	564039	female	spBar21	Condensor cmpt.	564135	male
Se67	Front axle cmpt.	563159	female	spBar22	Engine cmpt.	564135	male
Se69	Front axle cmpt.	563159	female	spBar23	Engine cmpt.	564135	male
Se74	Rear Axle Cmpt	563340	male	spBar24	Engine cmpt.	564135	male
Se79	Front Axle	563340	male	Spk1 L	Parcel Rack LH	563994	male
Se100	WCL door	562479	female	Spk1 R	Parcel Rack RH	563994	male
So3	RH Console	641385	male	Spk2 L	Parcel Rack LH	563994	male
So4	RH Console	641385	male	Spk2 R	Parcel Rack RH	563994	male
So5	RH Console	641385	male	Spk3 L	Parcel Rack LH	563994	male
So6	RH Console	641385	male	Spk3 R	Parcel Rack RH	563994	male
So7	Service Cmpt	561566	female	Spk4 L	Parcel Rack LH	563994	male
So8	Service cmpt.	641385	male	Spk4 R	Parcel Rack RH	563994	male
So9	Engine cmpt.	560016	female	Spk5 L	Parcel Rack LH	563994	male
So10	Cond Cmpt	562485	male	Spk5 R	Parcel Rack RH	563994	male
So11	Cond Cmpt	561566	female	Spk6 L	Parcel Rack LH	563994	male
So13	Evap Cmpt	563204	female	Spk6 R	Parcel Rack RH	563994	male
So14	Service cmpt.	641385	male	Spk7 L	Parcel Rack LH	563994	male
So15	Service cmpt.	641385	male	Spk7 R	Parcel Rack RH	563994	male
So16	Service cmpt.	641385	male	Spk8 L	Parcel Rack LH	563994	male
So17	Service cmpt.	562848	male	Spk8 R	Parcel Rack RH	563994	male
So18	Pneumatic plate	641385	male	Spk9 L	Parcel Rack LH	563994	male
So19	Pneumatic plate	641385	male	Spk9 R	Parcel Rack RH	563994	male
So20	Service cmpt.	641385	male	Spk10 L	Parcel Rack LH	563994	male
So21	Front Axle Cmpt	564046	female	Spk10 R	Parcel Rack RH	563994	male
So22	Front Axle Cmpt	564046	female	Spk11 L	Parcel Rack LH	563994	male

Connectors list

Connector ID	Location	Part no	Gender	Connector ID	Location	Part no	Gender
Spk11 R	Parcel Rack RH	563994	male	Sw39.B	RJB	562403	female
Spk12 L	Parcel Rack LH	563994	male	Sw40	LH Console	561690	male
Spk12 R	Parcel Rack RH	563994	male	Sw41	LH Console	562749	male
Spk13 L	Parcel Rack LH	563994	male	Sw42	Lugg Cmpt	561636	female
Spk13 R	Parcel Rack RH	563994	male	Sw43	LH Console	561690	male
Spk14 L	Parcel Rack LH	563994	male	Sw44.A	FJB	562403	female
Spk14 R	Parcel Rack RH	563994	male	Sw44.B	FJB	562403	female
Spk15 L	Parcel Rack LH	563994	male	Sw45.A	5th Lugg Cmpt	562485	male
Spk15 R	Parcel Rack RH	563994	male	Sw45.B	5th Lugg Cmpt	562486	female
Spk16 L	Parcel Rack LH	563994	male	Sw46.A	5th Lugg Cmpt	562485	male
Spk16 R	Parcel Rack RH	563994	male	Sw46.B	5th Lugg Cmpt	562486	female
SpkDr L	Parcel Rack LH	563994	male	Sw47.A	3rd Lugg Cmpt	562485	male
SpkDr R	Parcel Rack RH	563994	male	Sw47.B	3rd Lugg Cmpt	562486	female
Sub1.A	Passenger Area	564004	female	Sw48.A	3rd Lugg Cmpt	562485	male
Sub2.A	Passenger Area	564004	female	Sw48.B	3rd Lugg Cmpt	562486	female
Sw1.C258	Driver Area	561188	female	Sw49.A	2nd Lugg Cmpt	562485	male
Sw1.C259	Driver Area	561186	male	Sw49.B	2nd Lugg Cmpt	562486	female
Sw2	Dash	562763	male	Sw50.A	2nd Lugg Cmpt	562485	male
Sw3	Dash	562763	male	Sw50.B	2nd Lugg Cmpt	562486	female
Sw4	Dash	562763	male	Sw51.A	1st Lugg Cmpt	562485	male
Sw5	Dash	562763	male	Sw51.B	1st Lugg Cmpt	562486	female
Sw6	Dash	562763	male	Sw52.A	1st Lugg Cmpt	562485	male
Sw10A	LH Console	562763	male	Sw52.B	1st Lugg Cmpt	562486	female
Sw12	Dash	562763	male	Sw55.A	Lavatory	560488	female
Sw14	Dash	562763	male	Sw55.B	Lavatory	560488	female
Sw16	Dash	562763	male	Sw56.A	Lavatory	560488	female
Sw17	Dash	562763	male	Sw56.B	Lavatory	560488	female
Sw18A	LH Console	562763	male	Sw57	WCL system	563543	male
Sw20	Dash	562763	male	Sw58	Engine Cmpt.	563135	male
Sw21	Dash	562763	male	Sw59	Engine cmpt.	563135	male
Sw24	Dash	562763	male	Sw63A	LH Console	562763	male
Sw25	Dash	562763	male	Sw64.A	Service Cmpt	560815	female
Sw26	Dash	562763	male	Sw64.B	Service Cmpt	560815	female
Sw27	Dash	562763	male	Sw82	RJB	563135	male
Sw29	Dash	562763	male	Sw83.A	Dash	560082	female
Sw30	RJB	563135	male	Sw83.B	Dash	560815	female
Sw31	WCL system	563543	male	Sw83.C	Dash	560082	female
Sw32	Dash	561477	female	Sw83.D	Dash	560815	female
Sw33	Dash	561476	male	Sw85	LH Console	562749	male
Sw34	Outside Front RH	562477	male	Sw94.A	WCL system	562403	female
Sw35	Console	562763	male	Sw94.B	WCL system	562403	female
Sw38	LH Console	562763	male	Sw95.A	WCL door	562615	female
Sw39.A	RJB	562403	female	Sw95.B	WCL door	562615	female

Connectors list

Connector ID	Location	Part no	Gender	Connector ID	Location	Part no	Gender
Sw95.C	WCL door	562615	female	VECR3	RJB	563185	male
Sw96.A	WCL Door	562615	female	VECR3	RJB	mating 563185	female
Sw96.B	WCL Door	562615	female	VECR4	RJB	563182	male
Sw96.C	WCL door	562615	female	VECR4	RJB	mating 563182	female
Sw97.A	WCL system	562615	female	VECR9	RJB	563448	male
Sw97.B	WCL system	562615	female	VECR9	RJB	mating 563448	female
Sw97.C	WCL system	562615	female	VECR10	RJB	563181	male
Sw98.A	WCL system	562615	female	VECR10	RJB	mating 563181	female
Sw98.B	WCL system	562615	female	VECR11	RJB	563184	male
Sw98.C	WCL system	562615	female	VECR11	RJB	mating 563184	female
Sw100A	Dash	562763	male	VECR12	RJB	563187	male
Sw125.A	Service Cmpt	561457	female	VECR12	RJB	mating 563187	female
Sw125.B	Service Cmpt	561457	female	VECT1 plug	Rear vehicule	563715	male
Sw137	Dash	562763	male	VECT1 socket	Rear vehicule	mating 563715	female
Sw152	Driver Area	562471	male	VECT2 plug	Rear vehicule	563716	male
Sw156	LH Console	562763	male	VECT2 socket	Rear vehicule	mating 563716	female
Sw157	Dash	562763	male	VECT3	Rear vehicule	563718	male
Sw158	Dash	562763	male	VECT3	Rear vehicule	mating 563718	female
sym812 291.A	Parcel rack	565180	female	VECT4	Rear vehicule	563714	male
tab69	Parcel rack	561626	female	VECT4	Rear vehicule	mating 563714	female
Tab70a	Parcel rack	561626	female	Y80	Engine Cmpt	563789	male
Tab70b	Parcel rack	561626	female	Y81	Cond Cmpt	563793	male
tab71a	Parcel rack	561626	female				
VECF1	FJB	563186	male				
VECF1	FJB	mating 563186	female				
VECF2	FJB	563183	male				
VECF2	FJB	mating 563183	female				
VECF3	FJB	563185	male				
VECF3	FJB	mating 563185	female				
VECF4	FJB	563182	male				
VECF4	FJB	mating 563182	female				
VECF9	FJB	563448	male				
VECF9	FJB	mating 563448	female				
VECF10	FJB	563181	male				
VECF10	FJB	mating 563181	female				
VECF11	FJB	563184	male				
VECF11	FJB	mating 563184	female				
VECF12	FJB	563187	male				
VECF12	FJB	mating 563187	female				
VECR1	RJB	563186	male				
VECR1	RJB	mating 563186	female				
VECR2	RJB	563183	male				
VECR2	RJB	mating 563183	female				

CONNECTORS LIST

No	Location	Part #	Gender	No	Location	Part #	Gender
24SS_OP	Parcel_Rack_LH	563071	male	A36.JB	FJB	562765	male
24SS_OP	Parcel_Rack_LH	563040	female	A36.JC	FJB	562957	male
120V_inlet	Rearvehicule	561572	male	A39.P101	Parcel_Rack_LH	563201	male
A1	RJB	563975	male	A39.P901	Parcel_Rack_LH	563953	male
A2	FJB	563984	male	A60.A	Parcel_Rack_LH	563071	male
A3	Dash	562363	male	A60.B	Parcel_Rack_LH	562706	female
A4.A	Service_Cmpt	562428	female	A60.C	Parcel_Rack_LH	901110	male
A4.B	Service_Cmpt	561188	female	A60.D	Parcel_Rack_LH	901110	male
A5	Service_Cmpt	562428	female	A61.A	Parcel_Rack_LH	562464	male
A6	Engine_Cmpt	562427	male	A61.B	Parcel_Rack_LH	562465	male
A7	Rear_Axle_Cmpt	563979	male	A65.A	Parcel_Rack_LH	563025	male
A9.Cx1	FJB	564041	female	A65.B4	Parcel_Rack_LH	bidon	male
A9.Cx2	FJB	563678	male	A65.B5	Parcel_Rack_LH	bidon	male
A9.Cx3	FJB	564037	female	A65.B6	Parcel_Rack_LH	bidon	male
A9.Cx4	FJB	564038	female	A65.D	Parcel_Rack_LH	bidon	male
A10.X1	Engine_Cmpt	563135	male	A65.E	Parcelrack	563071	male
A10.X3	Engine_Cmpt	563134	female	A65.G1	Parcel_Rack_LH	563071	male
A11	LH_Console	563142	male	A65.G2	Parcel_Rack_LH	563071	male
A14.A	Dash	562766	male	A65.G3	Parcel_Rack_LH	563071	male
A14.B	Dash	562767	male	A65.H1	Parcel_Rack_LH	561716	female
A14.C	Dash	562765	male	A65.H2	Parcel_Rack_LH	561716	female
A15	Dash	562464	male	A65.H3	Parcel_Rack_LH	561716	female
A17.D	RJB	561932	male	A65.J	Parcel_Rack_LH	562465	male
A18.J1	FJB	562794	male	A69L.A	Parcel_Rack_LH	563025	male
A18.J2	FJB	562650	male	A69R.A	Parcel_Rack_LH	563025	male
A19	LH_Console	562878	female	A70c	Parcel_Rack_LH	561540	female
A20	Parcel_Rack_LH	561477	female	A77	Parcelrack	564547	male
A24.A	RH_Console	561890	male	A78	Parcelrack	562583	female
A24.B	RH_Console	561566	female	A70c	Parcel_Rack_LH	561540	female
A24.C	RH_Console	561889	female	A77	Parcelrack	564547	male
A25	Parcel_Rack_LH	563025	male	A78	Parcelrack	562583	female
A26.P1	Enginecmpt.	562350	male	A96	FJB	564073	female
A26.P2	Enginecmpt.	563322	female	A97	Dash	563226	male
A26.P4	Enginecmpt.	568088	male	A97A	FJB	563226	male
A27	Service_Cmpt	562929	male	A97A	FJB	563613	female
A28	Service_Cmpt	562928	male	A97B	FJB	563226	male
A29	Dash	562464	male	A97B	FJB	563613	female
A33.A	Parcel_Rack_LH	563071	male	A99	FJB	564205	male
A33.B	Parcel_Rack_LH	562330	female	A100	Front_Axle_Cmpt	563758	female
A34.J	Enginecmpt.	568118	male	A101	Rear_RH_Axle_Cmpt	563758	female
A34.K	Enginecmpt.	564270	male	A102	Rear_RH_Axle_Cmpt	563758	female
A34.L	Enginecmpt.	564269	male	A103	Dash	562070	female
A36.JA	FJB	562767	male	A107	EngineCmpt.	560336	male

CONNECTORS LIST

No	Location	Part #	Gender	No	Location	Part #	Gender
A108	RJB	562766	male	AE43.J2	FJB	564037	male
A109A	FJB	564141	male	AE43.J3	FJB	565957	male
A113.A	Parcel_Rack_LH	563960	male	AE44.J1	FJB	563679	male
A113.B	Parcel_Rack_LH	563962	male	AE44.J2	FJB	564037	female
A113.C1	Parcel_Rack_LH	563956	male	AE44.J3	FJB	565957	male
A113.C2	Parcel_Rack_LH	563957	male	AE45.J1	FJB	563679	male
A113.C3	Parcel_Rack_LH	563958	male	AE45.J2	FJB	564037	female
A114A	Dash	564252	male	AE45.J3	FJB	565957	male
A120.A	Dashboard	563960	male	AE46.J1	FJB	563679	male
A120.B	Dashboard	563962	male	AE46.J2	FJB	564037	female
A120.C1	Dashboard	563956	male	AE46.J3	FJB	565957	male
A120.C2	Dashboard	563957	male	AE47.J1	RH_console	563679	male
A120.C3	Dashboard	563958	male	AE47.J2	RH_console	564037	female
A121.Vsa	Dash	563679	male	AE47.J3	RH_console	565957	male
A121.Vsb	Dash	563678	male	AE48.J1	RH_console	563679	male
A121.Vsc	Dash	564037	male	AE48.J2	RH_console	564037	female
A121.Vsd	Dash	564118	male	AE48.J3	RH_console	565957	male
A130	Driver_Area	563226	male	AE49.J1	RJB	563679	male
A131.A	Engine_Cmpt	561782	male	AE49.J2	RJB	564037	male
A131.B	Engine_Cmpt	561781	female	AE49.J3	RJB	565957	male
A137A	Condensercmpt.	20429843	male	AE50.J1	RJB	563679	male
A138	Cond_Cmpt	563787	male	AE50.J2	RJB	564037	male
A139	Dash	564501	male	AE50.J3	RJB	565957	male
A150	Parcelrack	21280133	male	AE51.J1	RJB	563679	male
A152.A	Parcelrack	561550	male	AE51.J2	RJB	564037	female
A152.B	Parcelrack	563071	male	AE51.J3	RJB	565957	male
A152.C	Parcelrack	563071	male	AE52.J1	RJB	563679	male
A152.D	Parcelrack	563071	male	AE52.J2	RJB	564037	female
A152.E	Parcelrack	563071	male	AE52.J3	RJB	565957	male
A152.F	Parcelrack	563071	male	AE53.J1	Parcelrack	563679	male
A152.G	Parcelrack	563071	male	AE53.J2	Parcelrack	564037	female
A152.H	Parcelrack	563071	male	AE53.J3	Parcelrack	565957	male
A152.I	Parcelrack	563071	male	AE54.J1	Evaporatorcmpt.	563679	male
A152.J	Parcelrack	563071	male	AE54.J2	Evaporatorcmpt.	564037	female
A152.K	Parcelrack	562779	male	AE54.J3	Evaporatorcmpt.	565957	male
A152.L		562779	male	AE55.J1	Dash	563679	male
AE41.J1	FJB	563679	male	AE55.J2	Dash	564037	female
AE41.J2	FJB	564037	female	AE55.J3	Dash	564004	male
AE41.J3	FJB	564004	male	AE56.J1	Dash	563679	male
AE42.J1	FJB	563679	male	AE56.J2	Dash	564037	male
AE42.J2	FJB	564037	female	AE56.J3	Dash	564004	male
AE42.J3	FJB	564004	male	AE57.J1	WCLcmpt.	563679	male
AE43.J1	FJB	563679	male	AE57.J2	WCLcmpt.	564037	male

CONNECTORS LIST

No	Location	Part #	Gender	No	Location	Part #	Gender
AE57.J3	WCLcmpt.	564004	male	C6	FJB	563583	female
AltLL.A	Enginecmpt.	563746	female	C7	Service_Cmpt	562581	male
AltLL.B	Enginecmpt.	560815	female	C7	Service_Cmpt	562583	female
AltLL.C	Enginecmpt.	564469	female	C8	FJB	563227	male
AltLR.A	enginecmpt.	563746	female	C8	FJB	563614	female
AltLR.B	Enginecmpt.	560815	female	C9	RJB	561986	male
AltLR.C	Enginecmpt.	564469	female	C9	RJB	561987	female
AltUR.A	Enginecmpt.	563746	female	C10	Engine_Cmpt	562581	male
AltUR.B	Enginecmpt.	560815	female	C10	Engine_Cmpt	562583	female
AltUR.C	Enginecmpt.	564469	female	C11	Service_Cmpt	563580	male
B85	Engine_Cmpt	563815	male	C11	Service_Cmpt	563581	female
B96	Engine_Cmpt	563821	male	C12	Engine_Cmpt	562581	male
B96B	Engine_Cmpt	563823	male	C12	Engine_Cmpt	562583	female
B97	Engine_Cmpt	563816	male	C13_plug	RH_Console	563589	male
B98	Engine_Cmpt	563817	male	C13_socket	RH_Console	563590	female
B115A	Enginecmpt.	564226	male	C13S	RH_Console	563589	male
B142C	Condensercmpt.	563793	male	C13S	RH_Console	563590	female
B310	Enginecmpt.	565967	male	C14	WCLsystem	561550	male
C1	FJB	563589	male	C14	WCLsystem	561667	female
C1	FJB	563590	female	C15A	Evapotatorcmpt.	568110	male
C1S	FJB	563589	male	C15A	Evaporatotcmpt.	568109	female
C1S	FJB	563590	female	C16	RJB	561577	male
C2	Service_Cmpt	563580	male	C16	RJB	561605	female
C2	Service_Cmpt	563581	female	C17	RJB	560195	male
C2A	FJB	563580	male	C17	RJB	560169	female
C2A	FJB	563581	female	C18	FJB	561986	male
C2B	FJB	564034	male	C18	FJB	561987	female
C2B	FJB	564035	female	C19	RJB	561986	male
C3_plug	RJB	563589	male	C19	RJB	561987	female
C3_socke	RJB	563590	female	C20A	Evap_Cmpt	562485	male
C3AP	FJB	563589	male	C20A	Evap_Cmpt	562486	female
C3AP	FJB	563590	female	C20B	Evap_Cmpt	562485	male
C3AS	FJB	563589	male	C20B	Evap_Cmpt	562486	female
C3AS	FJB	563590	female	C23	Evaporatorcmpt.	564034	male
C3S	RJB	563593	male	C23	Evaporatorcmpt.	564035	female
C3S	RJB	563590	female	C24_plug	Evap_Cmpt	561690	male
C4	FJB	563580	male	C24_socket	Evap_Cmpt	561566	female
C4	FJB	563581	female	C25	Parcel_Rack_LH	561550	male
C5	FJB	563589	male	C25	Parcel_Rack_LH	561667	female
C5	FJB	563590	female	C26	Ureacmpt.	563226	male
C5S	FJB	563589	male	C26	Ureacmpt.	563613	female
C5S	FJB	563590	female	C26A	Ureacmpt.	568110	male
C6	FJB	563582	male	C26A	Ureacmpt.	568109	female

CONNECTORS LIST

No	Location	Part #	Gender	No	Location	Part #	Gender
C26B	Ureacmpt.	563227	male	C54	Engine_Cmpt.	563613	female
C26B	Ureacmpt.	563614	female	C54A	Ureacmpt.	568110	male
C29	4rd_Lugg_Cmpt	563651	male	C54A	Ureacmpt.	568109	female
C29	3rd_Lugg_Cmpt	563652	female	C54B	Engine_Cmpt.	562477	male
C30	3rd_Lugg_Cmpt	561710	male	C54B	Engine_Cmpt.	562479	female
C30	3rd_Lugg_Cmpt	561709	female	C55	Evap_Cmpt	561577	male
C31W	Parcelrack	563227	male	C55	Evap_Cmpt	561605	female
C31W	Parcelrack	563614	female	C59	RJB	561643	male
C32	lavatory	561734	male	C59	RJB	561642	female
C32	Lavatory	561735	female	C63	Entrace_Door	562581	male
C32W	WCLcmpt.	561669	male	C63	Entrace_Door	562583	female
C32W	WCLcmpt.	561670	female	C64	Enginecmpt.	568110	male
C33	WCLcmpt.	564034	male	C64	Enginecmpt.	568109	female
C33	WCLcmpt.	564035	female	C66_plug	Evap_Cmpt	561577	male
C34	RH_Console	561986	male	C66_socket	Evap_Cmpt	561605	female
C34	RH_Console	561987	female	C67	Parcelrack	561734	male
C36	FJB	561986	male	C67	Parcelrack	561735	female
C36	FJB	561987	female	C70	FJB	562557	male
C37	Parcel_Rack_LH	562557	male	C70	FJB	562558	female
C37	Parcel_Rack_LH	562558	female	C71	FJB	561646	male
C38	Parcelrack	562555	male	C71	FJB	561645	female
C38	Parcelrack	562556	female	C72	FJB	561646	male
C39	Parcelrack	562503	male	C72	FJB	561645	female
C39	Parcelrack	562507	female	C74	FJB	561645	female
C39A	Firesuppressioncmpt.	561782	male	C74	FJB	561646	male
C39A	Firesuppressioncmpt.	561781	female	C87	Engine_Cmpt	562485	male
C40	Dash	562485	male	C87	Engine_Cmpt	562486	female
C40	Dash	562486	female	C88	WCL_Cmpt.	563226	male
C41	RJB	561782	male	C88	WCL_Cmpt.	563613	female
C41	RJB	561781	female	C90	RJB	563582	male
C44_plug	FJB	561577	male	C90	RJB	563583	female
C44_socket	FJB	561605	female	C91	RJB	562285	male
C45	FJB	561643	male	C91	RJB	562282	female
C45	FJB	561642	female	C94_plug	FJB	563589	male
C46	3rdlugg.cmpt.	562549	male	C94_socket	FJB	563590	female
C46	3rdlugg.cmpt.	562550	female	C96	FJB	561646	male
C47	FJB	565207	male	C96	FJB	561645	female
C48	RJB	565208	male	C97	FJB	561643	male
C49	FJB	562005	male	C97	FJB	561642	female
C49	FJB	561714	female	C99	Enginecmpt.	562581	male
C50	RJB	568110	male	C99	Enginecmpt.	562583	female
C50	RJB	568109	female	C100	Evaporatorcmpt.	562477	male
C54	Engine_Cmpt.	563226	male	C100	Evaporatorcmpt.	562479	female

CONNECTORS LIST

No	Location	Part #	Gender	No	Location	Part #	Gender
C100S	Evaporator_Cmpt.	562477	male	C213	Parcel_Rack_LH	561552	female
C100S	Evaporator_Cmpt.	562479	female	C222	FJB	562477	male
C101	Service_Cmpt	561690	male	C222	FJB	562479	female
C101	Service_Cmpt	561566	female	C223	FJB	563227	male
C103_plug	FJB	562485	male	C223	FJB	563614	female
C103_socket	FJB	562486	female	C224	FJB	561637	male
C105_plug	FJB	562581	male	C224	FJB	561636	female
C105_socket	FJB	562583	female	C225	FJB	562650	male
C106_plug	FJB	562581	male	C225	FJB	562649	female
C106_socket	FJB	562583	female	C226	FJB	562650	male
C107A	Enginecmpt.	562885	female	C226	FJB	562649	female
C107A	Enginecmpt.	562884	female	C266	Parcelrack	561782	male
C107B	Enginecmpt.	562885	female	C266	Parcelrack	561781	female
C107B	Enginecmpt.	562884	female	C267	Parcelrack	561782	male
C107C	Enginecmpt.	562885	female	C267	Parcelrack	561781	female
C107C	Enginecmpt.	562884	female	C279	Service_Cmpt	562477	male
C110	Dash	568110	male	C279	Service_Cmpt	562479	female
C110	Dash	568109	female	C284	Parcel_Rack	561782	male
C119A	Rear_engine_door	568110	male	C284	Parcel_Rack	561781	female
C119A	Rear_engine_door	568109	female	C284_1	Parcel_Rack	561782	male
C131A	Engine_Cmpt	561782	male	C284_1	Parcel_Rack	561781	female
C131A	Engine_Cmpt	561781	female	C284_2	Parcel_Rack	561782	male
C131B	Engine_Cmpt	561782	male	C284_2	Parcel_Rack	561781	female
C131B	Engine_Cmpt	561781	female	C284_3	Parcel_Rack	561782	male
C144	RJB	560852	male	C284_3	Parcel_Rack	561781	female
C144	RJB	560851	female	C284_4	Parcel_Rack	561782	male
C152	Cond_Cmpt	561611	male	C284_4	Parcel_Rack	561781	female
C152	Cond_Cmpt	561610	female	C284_5	Parcel_Rack	561782	male
C170	LH_Console	561637	male	C284_5	Parcel_Rack	561781	female
C170	LH_Console	561636	female	C284_6	Parcel_Rack	561782	male
C171	LH_Console	561646	male	C284_6	Parcel_Rack	561781	female
C171	LH_Console	561645	female	C298	Parcelrack	561782	male
C193_plug	RJB	563589	male	C298	Parcelrack	561781	female
C193_socket	RJB	563590	female	C333	Upper_front	561550	male
C194	FJB	563589	male	C333	Upper_front	561667	female
C194	FJB	563590	female	C355	RJB	563582	male
C195	Dash	563347	male	C355	RJB	565887	female
C195	Dash	560489	female	C356	Parcelrack	561710	male
C206	Parcel_Rack_RH	562503	male	C356	Parcelrack	561709	female
C206	Parcel_Rack_RH	562507	female	C357	Parcelrack	561847	male
C207	Parcel_Rack_LH	562503	male	C357	Parcelrack	561862	female
C207	Parcel_Rack_LH	562507	female	C380A	Dash	564222	male
C213	Parcel_Rack_LH	561515	male	C380A	Dash	564224	female

CONNECTORS LIST

No	Location	Part #	Gender	No	Location	Part #	Gender
C381	Parcel_Rack	561847	male	C577AA	Parcelrack	560908	female
C381	Parcel_Rack	561862	female	C578	Parcel_Rack_LH	562503	male
C382	Under_Seat	561580	male	C578	Parcel_Rack_LH	562507	female
C382	Under_Seat	561582	female	C582	FJB	561690	female
C397	RJB	562285	male	C582	FJB	561566	female
C397	RJB	562282	female	C601	LHRoofWinAjar	561476	male
C430	LH_Console	562363	male	C601	LHRoofWinAjar	561477	female
C430	LH_Console	561188	female	C602	RH_Roof_Win_Ajar	561476	male
C452	Dash	561669	male	C602	RH_Roof_Win_Ajar	561477	female
C452	Dash	561670	female	C603	RHRoofWinAjar	561476	male
C463	Rearaxlecmpt.	568111	male	C603	RHRoofWinAjar	561477	female
C463	Rearaxlecmpt.	568112	female	C614	Passenger_Area	563071	male
C464	FJB	564222	male	C614	Passenger_Area	563040	female
C464	FJB	564224	female	C615	Passenger_Area	563071	male
C464A	Dash	564222	male	C615	Passenger_Area	563040	female
C464A	Dash	564224	female	C617	Mirror_LH	563801	male
C464B	FJB	564222	male	C617	Mirror_LH	563800	female
C464B	FJB	564224	female	C618	Mirror_RH	563801	male
C465	Parcelrack	562581	male	C618	Mirror_RH	563800	female
C465	Parcelrack	562583	female	C752_plu	Parcel_Rack	901062	male
C506	FJB	561687	male	C752_so	Parcel_Rack	901283	female
C506	FJB	561685	female	C753_plu	Parcel_Rack	901062	male
C542	Parcelrack	561550	male	C753_so	Parcel_Rack	901283	female
C542	Parcelrack	561667	female	C766	Parcelrack	561662	male
C558	Parcelrack	562503	male	C766	Parcelrack	561661	female
C558	Parcelrack	562507	female	C768	Parcel_Rack	901062	male
C564	Parcelrack	562503	male	C768	Parcel_Rack	901283	female
C564	Parcelrack	562507	female	C769	Parcel_Rack	901062	male
C564_Sp	Parcelrack	562503	male	C769	Parcel_Rack	901283	female
C564_Sp	Parcelrack	562507	female	C777	Dash	562477	male
C566	Parcelrack	562503	male	C777	Dash	562479	female
C566	Parcelrack	562507	female	C_A60DE	Parcel_Rack	563071	male
C567	Parcelrack	562503	male	C_A60DE	Parcel_Rack	563040	female
C567	Parcelrack	562507	female	C_A69R	Parcel_Rack	563025	male
C575	Parcel_Rack_RH	562503	male	C_ALT	Enginecmpt.	562581	male
C575	Parcel_Rack_RH	562507	female	C_ALT	Enginecmpt.	562583	female
C576B	Parcel_Rack_RH	562006	male	C_ALT3	Enginecmpt.	562477	male
C576B	Parcel_Rack_RH	560908	female	C_ALT3	Enginecmpt.	562479	female
C576BB	Parcelrack	562006	male	C_AUDIO	Parcel_Rack	562557	male
C576BB	Parcelrack	560908	female	C_AUDIO	Parcel_Rack	562558	female
C577A	Parcel_Rack	562006	male	C_Audio	Parcel_Rack	901062	male
C577A	Parcel_Rack	560908	female	C_Audio	Parcel_Rack	901283	female
C577AA	Parcelrack	562006	male	C_Audio	Parcel_Rack	901062	male

CONNECTORS LIST

No	Location	Part #	Gender	No	Location	Part #	Gender
C_Audio_HD	Parcel_Rack	901283	female	CP4	Passenger_Area	561781	female
C_AUX	Parcelrack	563071	male	CP5	Passenger_Area	561782	male
C_AUX	Parcelrack	563040	female	CP5	Passenger_Area	561781	female
C_INV1	Parcelrack	562337	male	CSo53	Rear_axle_cmpt.	561690	male
C_INV1	Parcelrack	562338	male	CSo53	Rear_axle_cmpt.	561566	female
C_INV2	Parcelrack	562337	male	CSw102	Rear_vehicule	562549	male
C_INV2	Parcelrack	562338	male	CSw102	Rear_vehicule	562550	female
C_LineOut	Parcelrack	563962	male	CSX1	Engine_Cmpt	563135	male
C_LineOut	Parcelrack	564489	female	CSX1	Engine_Cmpt	563134	female
C_Mo9	Evap_Cmpt	561577	male	CSX3	Engine_Cmpt	563135	male
C_Mo9	Evap_Cmpt	561605	female	CSX3	Engine_Cmpt	563134	female
C_Se51	Driver seat	563589	female	CT_IN	Rear_Vehicle	560167	male
C_Se51	Driver seat	563590	male	CT_IN	Rear_Vehicle	560159	female
C_USB	Parcel_Rack	562069	female	CT_Out	Rear_Vehicle	560233	female
C_USB	Parcel_Rack	562070	male	EI	Enginecmpt.	563739	male
CCAN1	FJB	562650	female	L1A	Enginecmpt.	564045	female
CCAN1	FJB	562649	male	L16.A	Frontroof	562615	female
CCAN2	FJB	562650	female	L16.B	Frontroof	562615	female
CCAN2	FJB	562649	male	L17.A	Frontroof	562615	female
CCAN3	FJB	562650	female	L17.B	Frontroof	562615	female
CCAN3	FJB	562649	female	L18	Entrance_Door	562549	male
CCAN4	FJB	562650	female	L19	Entracedoor	562486	female
CCAN4	FJB	562649	male	L20	Entracedoorstep	562486	female
CCust	RJB	562477	female	L21	Upper_front	562486	female
CCust	RJB	562479	male	L22	Upper_front	562486	female
CFHPR1	Parcelrack	564560	female	L23	Upper_front	562486	female
CIND-1.A	Parcelrack	560908	male	L24	Upper_front	562486	female
CIND-1.B	Parcelrack	560908	female	L25	Upper_front	562486	female
CIND-2.A	Parcelrack	560908	female	L26	Upper_front	562486	female
CIND-2.B	Parcelrack	560908	female	L27	Upper_front	562486	female
CIND-11.A	Parcelrack	560908	female	L28	Parcelrack	560898	male
CIND-11.B	Parcelrack	560908	female	L29	Parcelrack	560898	male
CINDWC-1.A	Parcelrack	560908	female	L30	Parcelrack	560898	male
CINDWC-1.B	Parcelrack	560908	female	L30A.A	Parcelrack	560898	male
CL1	FJB	562485	male	L30B.A	Parcelrack	560898	male
CL1	FJB	562486	female	L31	Parcelrack	560898	male
CP1	Passenger_Area	561782	male	L32	Parcelrack	560898	male
CP1	Passenger_Area	561781	female	L33	Parcelrack	560898	male
CP2	Passenger_Area	561782	male	L34	Parcelrack	560898	male
CP2	Passenger_Area	561781	female	L35	Parcelrack	560898	male
CP3	Passengersarea	561782	male	L36	Parcelrack	560898	male
CP3	Passengersarea	561781	female	L37	Parcelrack	560898	male
CP4	Passenger_Area	561782	male	L38	Parcelrack	560898	male

CONNECTORS LIST

No	Location	Part #	Gender	No	Location	Part #	Gender
L39	Parcelrack	560898	male	L74	Rear_Vehicle	562155	male
L40	Parcelrack	560898	male	L75	Rearenginedoor	562155	male
L41	Parcelrack	560898	male	L76	Rear_engine_door	562155	male
L42	Parcelrack	560898	male	L81.A	Rear_Vehicle	562835	female
L43	Parcelrack	560898	male	L81.B	Rear_Vehicle	562834	male
L44	Parcelrack	560898	male	L82A	Rearvehicule	562348	female
L45	Parcelrack	560898	male	L83A	Rearvehicule	562348	female
L46	Parcelrack	560898	male	L84	Rear_roof	562486	female
L47	Parcelrack	560898	male	L85	Rear_roof	562486	female
L48	Parcelrack	560898	male	L86	Rear_roof	562486	female
L49	Parcelrack	560898	male	L87	Rear_roof	562486	female
L50	Parcelrack	560898	male	L88	Rear_roof	562486	female
L51	Parcelrack	560898	male	L89	Rear_roof	562486	female
L52	Parcelrack	560898	male	L90	Rear_roof	562486	female
L52	Parcelrack	560900	female	L93.A	Engine_Cmpt.	563069	female
L52A	Parcelrack	560898	male	L93.B	Engine_Cmpt.	563069	female
L53	Parcelrack	560898	male	L94.A	Engine_Cmpt.	563069	female
L53	Parcelrack	560900	female	L94.B	Engine_Cmpt.	563069	female
L53A	Parcelrack	560898	male	L95	Outside_Front_LH	562485	male
L54	Parcelrack	560898	male	L95A	Outside_Front_LH	562485	male
L54	Parcelrack	560900	female	L96	Outside_Front_RH	562485	male
L54A	Parcelrack	560898	male	L96A	Outside_Front_RH	562485	male
L55	Parcelrack	560898	male	L97.A	Outside_Front_LH	563069	female
L55	Parcelrack	560900	female	L97.B	Outside_Front_LH	563069	female
L55A	Parcelrack	560898	male	L98.A	Entrance_Door	563069	female
L56	Parcelrack	560898	male	L98.B	Outside_Front_RH	563069	female
L56	Parcelrack	560900	female	L140	Lavatory	561247	male
L56A	Parcelrack	560898	male	L141	Upper_front	561247	male
L57	Parcelrack	560898	male	L142	Lavatory	562006	male
L57	Parcelrack	560900	female	L143	Parcel_rack	561186	male
L57A	Parcelrack	560898	male	L144	Parcelrack	561186	male
L58	Parcelrack	560898	male	L145	Parcelrack	561186	male
L58	Parcelrack	560900	female	L146	Parcelrack	561186	male
L58A	Parcelrack	560898	male	L147	Parcelrack	561186	male
L63	Front_Side_LH	562155	male	L148	Parcelrack	561186	male
L64	Outside_Front_RH	562155	male	L149	Parcelrack	561186	male
L65	Outside_Front_LH	562155	male	L150	Parcelrack	561186	male
L66	Out_Side_Front_LH	562155	male	L151	Parcelrack	561186	male
L67	4th_Lugg_Cmpt	562155	male	L152	Parcelrack	561186	male
L68	4th_Lugg_Cmpt	562155	male	L153	Parcelrack	561186	male
L69	4th_Lugg_Cmpt	562155	male	L154	Parcelrack	561186	male
L70	4th_Lugg_Cmpt	562155	male	L155	Parcelrack	561186	male
L72	Rear_Vehicle	562155	male	L156	Parcelrack	561186	male

CONNECTORS LIST

No	Location	Part #	Gender	No	Location	Part #	Gender
L157	Parcelrack	561186	male	L252	Parcelrack	561186	male
L158	Parcelrack	561186	male	L253	Parcel_rack	561186	male
L173	Parcelrack	563590	female	L254	Parcelrack	561186	male
L174A	Parcelrack	563590	female	L255	Parcel_rack	561186	male
L175	Engine_Cmpt.	563590	female	L256	Parcelrack	561186	male
L176	5th_Lugg_Cmpt	561247	male	L257	Parcelrack	561186	male
L177	5th_Lugg_Cmpt	561247	male	L258	Parcel_rack	561186	male
L178	3rd_Lugg_Cmpt	561247	male	L282	Engine_Cmpt	561690	male
L179	3rd_Lugg_Cmpt	561247	male	L285.A	Rear_Vehicle	562835	female
L180	2nd_Lugg_Cmpt	561247	male	L285.B	Rear_Vehicle	562834	male
L181	2nd_Lugg_Cmpt	561247	male	L286.A	Rear_Vehicle	562835	female
L182	1st_Lugg_Cmpt	561247	male	L286.B	Rear_Vehicle	562834	male
L183	1st_Lugg_Cmpt	561247	male	L290	Engine_door	562565	female
L184	Servicecmpt.	561247	male	L291	Engine_door	562565	female
L185..	Servicecmpt.	561539	male	L298A	Enginecmpt.	563590	female
L185.	Servicecmpt.	561539	male	L306	RJBcmpt.	561247	male
L186..	Dash	561539	male	L314	Front_vehicle	562789	male
L186.	Dash	561539	male	L315	Front_vehicle	562789	male
L187	Engine_Cmpt	561690	male	L319	Under_WCL_platform	561247	male
L188	Service_Cmpt	562486	female	L350A	Rearaxlecmpt.	564552	male
L193..	Dash	560488	female	L350A	Rearaxlecmpt.	563340	male
L193.	Dash	560488	female	L350A	Rearaxlecmpt.	562251	male
L194..	Dash	562019	female	Mic_D	Parcel_rack	560999	male
L194.	Dash	560488	female	Mic_D	Parcel_rack	560999	male
L195..	Dash	560488	female	Mic_D	Parcel_rack	560999	male
L195.	Dash	560488	female	Mic_G	Parcel_rack	560999	male
L199	Enginecmpt.	562848	male	Mic_G	Parcel_rack	560999	male
L201	Upper_front	561247	male	Mic_G	Parcel_rack	560999	male
L202	Upper_front	561247	male	Mo3	Dash	561667	female
L203	RH_Console	561690	male	Mo4	Dash	562076	male
L204	Parcel_Rack_RH	562803	male	Mo5	Upper_front	561550	male
L205	Enginecmpt.	562485	male	Mo6	Front_vehicle	561690	male
L206	Parcel_Rack_RH	562803	male	Mo7	Cond_Cmpt	563691	male
L211	Entrace_Door_step	562486	female	Mo8	Cond_Cmpt	563691	male
L243	Parcelrack	561186	male	Mo10	Parcel_rack	561515	male
L244	Parcelrack	561186	male	Mo11	Parcel_rack	561515	male
L245	Parcelrack	561186	male	Mo12	Engine_Cmpt	561690	male
L246	Parcelrack	561186	male	Mo13	Engine_Cmpt	561690	female
L247	Parcel_rack	561186	male	Mo14	Engine_Cmpt	561566	female
L248	Parcelrack	561186	male	Mo15	Front_Ceiling	560900	female
L249	Parcelrack	561186	male	Mo16	Front_Ceiling	560900	female
L250	Parcel_rack	561186	male	Mo17	RH_Console	563626	male
L251	Parcel_rack	561186	male	Mo18	Fr_Service_Door	562474	male

CONNECTORS LIST

No	Location	Part #	Gender	No	Location	Part #	Gender
Mo19	Fr_Service_Door	562474	male	R34	RJB	564210	male
Mo20	Fr_Service_Door	562474	male	R36	Dash	564496	male
Mo21	Upper_front	561186	male	R37	Dash	564496	male
Mo22	RH_Console	561186	male	R38	FJB	564496	male
Mo24	RH_Console	562348	female	R40	RJB	564496	male
Mo25	RH_Console	562348	female	R47	Parcelrack	564496	male
Mo27	Cond_Cmpt	563691	male	R_12VISS	Parcel_rack	564496	male
Mo28	Cond_Cmpt	563691	male	RadioVolvo1_933	Parcel_rack	563960	male
Mo54	Service_Cmpt	562474	male	RadioVolvo1_933	Parcel_rack	563962	male
Mo61	Parcel_rack	561248	female	RadioVolvo1_933	Parcel_rack	563956	male
Mo65	Enginecmpt.	568089	male	RadioVolvo1_933	Parcel_rack	563957	male
Mo67	Enginecmpt.	568089	male	RadioVolvo1_933	Parcel_rack	563958	male
Mo68	Enginecmpt.	568089	male	RadioVolvo2_933	Parcel_rack	563960	male
Mo69	Enginecmpt.	568089	male	RadioVolvo2_933	Parcel_rack	563962	male
Mo70	Enginecmpt.	568089	male	RadioVolvo2_933	Parcel_rack	563956	male
Mo71	Enginecmpt.	568089	male	RadioVolvo2_933	Parcel_rack	563957	male
Mo72	Enginecmpt.	568089	male	RadioVolvo2_933	Parcel_rack	563958	male
Mo73	Enginecmpt.	568089	male	RadioVolvo3_933	Parcel_rack	563960	male
PC1	FJB	562650	male	RadioVolvo3_933	Parcel_rack	563962	male
PC1	FJB	562649	female	RadioVolvo3_933	Parcel_rack	563956	male
PF	FJB	561782	male	RadioVolvo3_933	Parcel_rack	563957	male
PF	FJB	561781	female	RadioVolvo3_933	Parcel_rack	563958	male
PF1	Passenger_Area	561782	male	Res3.A	RJB	563590	female
PF1	Passenger_Area	561781	female	Res4	FJB	563590	female
Pot1.A	Dash	560488	female	Res6	FJB	563590	female
Pot1.B	Dash	560488	female	Res6A	FJB	563589	male
Pot1.C	Dash	560488	female	Res6A	FJB	563590	female
PR	Parcelrack	561782	male	Res6B	FJB	563589	male
PR	Parcelrack	561781	female	Res6B	FJB	563590	female
PR1	Passenger_Area	561782	male	Res7	Dash	563590	female
PR1	Passenger_Area	561781	female	Res15	Engine_Cmpt	561782	male
R3	RJB	563409	male	Res31	Ureacmpt.	562350	male
R4	FJB	564496	male	Res32	Ureacmpt.	563764	female
R5	RJB	564496	male	Res53	Dash	563590	female
R12	Evap_Cmpt	563409	male	Res99	Dash	563590	female
R20	RJB	564496	male	Se2	Service_Cmpt	561566	female
R21	FJB	560525	male	Se4	Window_RH	561477	female
R26	Evap_Cmpt	564496	male	Se5	Window_RH	561477	female
R27	Dash	564496	male	Se6	Window_RH	561477	female
R28	FJB	564496	male	Se7	Window_LH	561477	female
R29	RJB	563409	male	Se8	Window_LH	561477	female
R30	FJB	564496	male	Se9	Window_LH	561477	female
R31	FJB	564496	male	Se10	FJB	561477	female

CONNECTORS LIST

No	Location	Part #	Gender	No	Location	Part #	Gender
Se11.A	Cond_Cmpt	560082	female	Se67	Frontaxlecmpt.	563159	female
Se11.B	Cond_Cmpt	560082	female	Se69	Frontaxlecmpt.	563159	female
Se11.C	Cond_Cmpt	560082	female	Se74	Rear_Axle_Cmpt	563340	male
Se13	Engine_Cmpt	562350	male	Se79	Front_Axle	563340	male
Se14.A	Driver_Area	561782	male	Se94	WCLdoor	562877	female
Se14.B	Driver_Area	561781	female	Se100	WCLdoor	562479	female
Se15	RH_Console	560898	male	So3	RH_Console	641385	male
Se17	Entrace_Door	560081	female	So4	RH_Console	641385	male
Se18	Servicecmpt.	561566	female	So5	RH_Console	641385	male
Se19_P	Service_Cmpt	563677	male	So6	RH_Console	641385	male
Se19_S	Service_Cmpt	563677	male	So7	Service_Cmpt	561566	female
Se20	Evap_Cmpt	562426	male	So8	Servicecmpt.	641385	male
Se21	Dash	561248	female	So9	Enginecmpt.	560016	female
Se23	Engine_Cmpt	563159	male	So10	Cond_Cmpt	562485	male
Se24	Evap_Cmpt	563758	female	So11	Cond_Cmpt	561566	female
Se25	Passenger_Area	561248	female	So13	Evap_Cmpt	563204	female
Se28	Pneumatic_plate	561690	male	So14	Servicecmpt.	641385	male
Se29	Engine_Cmpt	561566	female	So15	Servicecmpt.	641385	male
Se30	Enginedoor	562877	female	So16	Servicecmpt.	641385	male
Se31	Enginedoor	562877	female	So17	Servicecmpt.	562848	male
Se32	Rear_Axle_Cmpt	562426	male	So18	Pneumatic_plate	641385	male
Se33	Rear_Axle_Cmpt	562856	male	So19	Pneumatic_plate	641385	male
Se34	Rear_Axle_Cmpt	562426	male	So20	Servicecmpt.	641385	male
Se35	Rear_Axle_Cmpt	562426	male	So21	Front_Axle_Cmpt	564046	female
Se36	Rear_Axle_Cmpt	562427	male	So22	Front_Axle_Cmpt	564046	female
Se37	Front_Axle_LH	641132	female	So23	Rear_Axle_Cmpt	564046	female
Se38	Front_Axle_RH	641132	female	So24	Rear_Axle_Cmpt	564046	female
Se39	Rear_Axle_LH	641132	female	So27	Rearaxlecmpt.	564045	female
Se40	Rear_Axle_LH	641132	female	So50	Rearaxlecmpt.	564046	female
Se41	Condensor_cmpt.	562877	female	So52	Rearaxlecmpt.	564045	female
Se45	Servicecmpt.	563409	male	So54	Enginecmpt.	564045	female
Se46	Rearaxlecmpt.	562348	female	spBar4	Enginecmpt.	564135	male
Se49	Engine_Cmpt	561690	male	spBar5	Enginecmpt.	564135	male
Se51	Driver seat	563589	male	spBar6	Enginecmpt.	564135	male
Se53	Service_Cmpt	563159	female	spBar7	Enginecmpt.	564135	male
Se54	Service_Cmpt	563159	female	spBar11	Engine_Cmpt.	564135	male
Se55	Service_Cmpt	563159	female	spBar12	Engine_Cmpt.	564135	male
Se56	WCLdoor	562479	female	spBar13	Enginecmpt.	564135	male
Se60	Service_Cmpt	563409	male	spBar14	Enginecmpt.	564135	male
Se63	Rearaxlecmpt.	641132	female	spBar15	Enginecmpt.	564135	male
Se64	Rearaxlecmpt.	641132	female	spBar16	Enginecmpt.	564135	male
Se65	Dash	564042	female	spBar19	Condensorcmpt.	564135	male
Se66	FJB	564039	female	spBar20	Condensorcmpt.	564135	male

CONNECTORS LIST

No	Location	Part #	Gender	No	Location	Part #	Gender
spBar21	Condensorcmpt.	564135	male	Sw3	Dash	562763	male
spBar22	Enginecmpt.	564135	male	Sw4	Dash	562763	male
spBar23	Enginecmpt.	564135	male	Sw5	Dash	562763	male
spBar24	Enginecmpt.	564135	male	Sw6	Dash	562763	male
Spk1_L	Parcel_Rack_LH	563994	male	Sw10A	LH_Console	562763	male
Spk1_R	Parcel_Rack_RH	563994	male	Sw12	Dash	562763	male
Spk2_L	Parcel_Rack_LH	563994	male	Sw14	Dash	562763	male
Spk2_R	Parcel_Rack_RH	563994	male	Sw16	Dash	562763	male
Spk3_L	Parcel_Rack_LH	563994	male	Sw17	Dash	562763	male
Spk3_R	Parcel_Rack_RH	563994	male	Sw18A	LH_Console	562763	male
Spk4_L	Parcel_Rack_LH	563994	male	Sw20	Dash	562763	male
Spk4_R	Parcel_Rack_RH	563994	male	Sw21	Dash	562763	male
Spk5_L	Parcel_Rack_LH	563994	male	Sw24	Dash	562763	male
Spk5_R	Parcel_Rack_RH	563994	male	Sw25	Dash	562763	male
Spk6_L	Parcel_Rack_LH	563994	male	Sw26	Dash	562763	male
Spk6_R	Parcel_Rack_RH	563994	male	Sw27	Dash	562763	male
Spk7_L	Parcel_Rack_LH	563994	male	Sw29	Dash	562763	male
Spk7_R	Parcel_Rack_RH	563994	male	Sw30	RJB	563135	male
Spk8_L	Parcel_Rack_LH	563994	male	Sw32	Dash	561477	female
Spk8_R	Parcel_Rack_RH	563994	male	Sw33	Dash	561476	male
Spk9_L	Parcel_Rack_LH	563994	male	Sw34	Outside_Front_RH	562477	male
Spk9_R	Parcel_Rack_RH	563994	male	Sw35	Console	562763	male
Spk10_L	Parcel_Rack_LH	563994	male	Sw38	LH_Console	562763	male
Spk10_R	Parcel_Rack_RH	563994	male	Sw39.A	RJB	562403	female
Spk11_L	Parcel_Rack_LH	563994	male	Sw39.B	RJB	562403	female
Spk11_R	Parcel_Rack_RH	563994	male	Sw40	LH_Console	561690	male
Spk12_L	Parcel_Rack_LH	563994	male	Sw41	LH_Console	562749	male
Spk12_R	Parcel_Rack_RH	563994	male	Sw42	Lugg_Cmpt	561636	female
Spk13_L	Parcel_Rack_LH	563994	male	Sw43	LH_Console	561690	male
Spk13_R	Parcel_Rack_RH	563994	male	Sw44.A	FJB	562403	female
Spk14_L	Parcel_Rack_LH	563994	male	Sw44.B	FJB	562403	female
Spk14_R	Parcel_Rack_RH	563994	male	Sw45.A	5th_Lugg_Cmpt	562485	male
Spk15_L	Parcel_Rack_LH	563994	male	Sw45.B	5th_Lugg_Cmpt	562486	female
Spk15_R	Parcel_Rack_RH	563994	male	Sw46.A	5th_Lugg_Cmpt	562485	male
Spk16_L	Parcel_Rack_LH	563994	male	Sw46.B	5th_Lugg_Cmpt	562486	female
Spk16_R	Parcel_Rack_RH	563994	male	Sw47.A	3rd_Lugg_Cmpt	562485	male
SpkDr_L	Parcel_Rack_LH	563994	male	Sw47.B	3rd_Lugg_Cmpt	562486	female
SpkDr_R	Parcel_Rack_RH	563994	male	Sw48.A	3rd_Lugg_Cmpt	562485	male
Sub1.A	Passenger_Area	564004	female	Sw48.B	3rd_Lugg_Cmpt	562486	female
Sub2.A	Passenger_Area	564004	female	Sw49.A	2nd_Lugg_Cmpt	562485	male
Sw1.C258	Driver_Area	561188	female	Sw49.B	2nd_Lugg_Cmpt	562486	female
Sw1.C259	Driver_Area	561186	male	Sw50.A	2nd_Lugg_Cmpt	562485	male
Sw2	Dash	562763	male	Sw50.B	2nd_Lugg_Cmpt	562486	female

CONNECTORS LIST

No	Location	Part #	Gender	No	Location	Part #	Gender
Sw51.A	1st_Lugg_Cmpt	562485	male	VECF1	FJB	563186	male
Sw51.B	1st_Lugg_Cmpt	562486	female	VECF2	FJB	563183	male
Sw52.A	1st_Lugg_Cmpt	562485	male	VECF3	FJB	563185	male
Sw52.B	1st_Lugg_Cmpt	562486	female	VECF4	FJB	563182	male
Sw55.A	Lavatory	560488	female	VECF9	FJB	563448	male
Sw55.B	Lavatory	560488	female	VECF10	FJB	563181	male
Sw56.A	Lavatory	560488	female	VECF11	FJB	563184	male
Sw56.B	Lavatory	560488	female	VECF12	FJB	563187	male
Sw58	Engine_Cmpt.	563135	male	VECR1	RJB	563186	male
Sw59	Enginecmpt.	563135	male	VECR2	RJB	563183	male
Sw63A	LHConsole	562763	male	VECR3	RJB	563185	male
Sw64.A	Service_Cmpt	560815	female	VECR4	RJB	563182	male
Sw64.B	Service_Cmpt	560815	female	VECR9	RJB	563448	male
Sw82	RJB	563135	male	VECR10	RJB	563181	male
Sw83.A	Dash	560082	female	VECR11	RJB	563184	male
Sw83.B	Dash	560815	female	VECR12	RJB	563187	male
Sw83.C	Dash	560082	female	VECT3	Rear_vehicule	563718	male
Sw83.D	Dash	560815	female	VECT4	Rear_vehicule	563714	male
Sw85	LH_Console	562749	male	Y80	Engine_Cmpt	563789	male
Sw95.A	WCLdoor	562615	female	Y81	Cond_Cmpt	563793	male
Sw95.B	WCLdoor	562615	female				
Sw95.C	WCLdoor	562615	female				
Sw96.A	WCL_Door	562615	female				
Sw96.B	WCL_Door	562615	female				
Sw96.C	WCLdoor	562615	female				
Sw97.A	WCLsystem	562615	female				
Sw97.B	WCLsystem	562615	female				
Sw97.C	WCLsystem	562615	female				
Sw98.A	WCLsystem	562615	female				
Sw98.B	WCLsystem	562615	female				
Sw98.C	WCLsystem	562615	female				
Sw100A	Dash	562763	male				
Sw125.A	Service_Cmpt	561457	female				
Sw125.B	Service_Cmpt	561457	female				
Sw137	Dash	562763	male				
Sw156	LH_Console	562763	male				
Sw157	Dash	562763	male				
Sw158	Dash	562763	male				
sym812_2	Parcelrack	565180	female				
tab69	Parcelrack	561626	female				
Tab70a	Parcelrack	561626	female				
Tab70b	Parcelrack	561626	female				
tab71a	Parcelrack	561626	female				

CONNECTORS LIST

No	Location	Part #	Gender	No	Location	Part #	Gender
24SS_OP	Parcel_Rack_LH	563071	male	A34.J	Enginecmpt.	568118	male
24SS_OP	Parcel_Rack_LH	563040	female	A34.K	Enginecmpt.	564270	male
24SS_OP_2		563071	male	A34.L	Enginecmpt.	564269	male
24SS_OP_2		563040	female	A36.JA	FJB	562767	male
120V_inlet	Rearvehicule	561572	male	A36.JB	FJB	562765	male
A1	RJB	563975	male	A36.JC	FJB	562957	male
A2	FJB	563984	male	A39.P101	Parcel_Rack_LH	563201	male
A3	Dash	562363	male	A39.P901	Parcel_Rack_LH	563953	male
A4.A	Service_Cmpt	562428	female	A41.J1	FJB	563679	male
A4.B	Service_Cmpt	561188	female	A41.J2	FJB	564037	male
A5	Service_Cmpt	562428	female	A41.J3	FJB	564004	male
A6	Engine_Cmpt	562427	male	A60.A	Parcel_Rack_LH	563071	male
A7	Rear_Axle_Cmpt	563979	male	A60.B	Parcel_Rack_LH	562706	female
A9.Cx1	FJB	564041	female	A60.C	Parcel_Rack_LH	901110	male
A9.Cx2	FJB	563678	male	A60.D	Parcel_Rack_LH	901110	male
A9.Cx3	FJB	564037	female	A61.A	Parcel_Rack_LH	562464	male
A9.Cx4	FJB	564038	female	A61.B	Parcel_Rack_LH	562465	male
A10.X1	Engine_Cmpt	563135	male	A65.A	Parcel_Rack_LH	563025	male
A10.X3	Engine_Cmpt	563134	female	A65.B4	Parcel_Rack_LH	bidon	male
A11	LH_Console	563142	male	A65.B5	Parcel_Rack_LH	bidon	male
A14.A	Dash	562766	male	A65.B6	Parcel_Rack_LH	bidon	male
A14.B	Dash	562767	male	A65.D	Parcel_Rack_LH	bidon	male
A14.C	Dash	562765	male	A65.E	Parcelrack	563071	male
A15	Dash	562464	male	A65.G1	Parcel_Rack_LH	563071	male
A17.D	RJB	561932	male	A65.G2	Parcel_Rack_LH	563071	male
A18.J1	FJB	562794	male	A65.G3	Parcel_Rack_LH	563071	male
A18.J2	FJB	562650	male	A65.H1	Parcel_Rack_LH	561716	female
A19	LH_Console	562878	female	A65.H2	Parcel_Rack_LH	561716	female
A20	Parcel_Rack_LH	561477	female	A65.H3	Parcel_Rack_LH	561716	female
A24.A	RH_Console	561890	male	A65.J	Parcel_Rack_LH	562465	male
A24.B	RH_Console	561566	female	A69L.A	Parcel_Rack_LH	563025	male
A24.C	RH_Console	561889	female	A69L.B1	Parcel_Rack_LH	bidon	male
A25	Parcel_Rack_LH	563025	male	A69L.B2	Parcel_Rack_LH	bidon	male
A26.P1	Enginecmpt.	562350	male	A69L.B3	Parcel_Rack_LH	bidon	male
A26.P2	Enginecmpt.	563322	female	A69L.B4	Parcel_Rack_LH	bidon	male
A26.P4	Enginecmpt.	568088	male	A69L.C	Parcel_Rack_LH	bidon	male
A27	Service_Cmpt	562929	male	A69R.A	Parcel_Rack_LH	563025	male
A28	Service_Cmpt	562928	male	A69R.B1	Parcel_Rack_LH	bidon	male
A29	Dash	562464	male	A69R.B2	Parcel_Rack_LH	bidon	male
A33.A	Parcel_Rack_LH	563071	male	A69R.B3	Parcel_Rack_LH	bidon	male
A33.B	Parcel_Rack_LH	562330	female	A69R.B4	Parcel_Rack_LH	bidon	male

CONNECTORS LIST

No	Location	Part #	Gender	No	Location	Part #	Gender
A69R.C	Parcel_Rack_LH	bidon	male	A120.C2	Dashboard	563957	male
A70c	Parcel_Rack_LH	561540	female	A120.C3	Dashboard	563958	male
A77	Parcelrack	564547	male	A121.Vsa	Dash	563679	male
A78	Parcelrack	562583	female	A121.Vsb	Dash	563678	male
A79	Parcelrack	562583	female	A121.Vsc	Dash	564037	male
A80	Parcelrack	562479	female	A121.Vsd	Dash	564118	male
A81.JA	FJB	562767	male	A130	Driver_Area	563226	male
A81.JB	FJB	562765	male	A131.A	Engine_Cmpt	561782	male
A81.JC	FJB	562957	male	A131.B	Engine_Cmpt	561781	female
A83	Parcelrack	565970	female	A137A	Condensercmpt.	20429843	male
A95.A	Parcelrack	564489	female	A138	Cond_Cmpt	563787	male
A95.B	Parcelrack	562706	female	A139	Dash	564501	male
A95.C	Parcelrack	562706	female	A150	Parcelrack	21280133	male
A96	FJB	564073	female	A152.A	Parcelrack	561550	male
A97	Dash	563226	male	A152.B	Parcelrack	563071	male
A97A	FJB	563226	male	A152.C	Parcelrack	563071	male
A97A	FJB	563613	female	A152.D	Parcelrack	563071	male
A97B	FJB	563226	male	A152.E	Parcelrack	563071	male
A97B	FJB	563613	female	A152.F	Parcelrack	563071	male
A99	FJB	564205	male	A152.G	Parcelrack	563071	male
A100	Front_Axle_Cmpt	563758	female	A152.H	Parcelrack	563071	male
A101	Rear_RH_Axle_Cmpt	563758	female	A152.I	Parcelrack	563071	male
A102	Rear_RH_Axle_Cmpt	563758	female	A152.J	Parcelrack	563071	male
A103	Dash	562070	female	A152.K	Parcelrack	562779	male
A107	EngineCmpt.	560336	male	A152.L	Parcelrack	562779	male
A108	RJB	562766	male	AE41.J1	FJB	563679	male
A109A	FJB	564141	male	AE41.J2	FJB	564037	female
A111	RJB	562550	female	AE41.J3	FJB	564004	male
A113.A	Parcel_Rack_LH	563960	male	AE42.J1	FJB	563679	male
A113.B	Parcel_Rack_LH	563962	male	AE42.J2	FJB	564037	female
A113.C1	Parcel_Rack_LH	563956	male	AE42.J3	FJB	564004	male
A113.C2	Parcel_Rack_LH	563957	male	AE43.J1	FJB	563679	male
A113.C3	Parcel_Rack_LH	563958	male	AE43.J2	FJB	564037	male
A114A	Dash	564252	male	AE43.J3	FJB	565957	male
A120.A	Dashboard	563960	male	AE44.J1	FJB	563679	male
A120.B	Dashboard	563962	male	AE44.J2	FJB	564037	female
A120.C1	Dashboard	563956	male	AE44.J3	FJB	565957	male

CONNECTORS LIST

No	Location	Part #	Gender	No	Location	Part #	Gender
AE45.J1	FJB	563679	male	AltLL.C	Enginecmpt.	564469	female
AE45.J2	FJB	564037	female	AltLR.A	enginecmpt.	563746	female
AE45.J3	FJB	565957	male	AltLR.B	Enginecmpt.	560815	female
AE46.J1	FJB	563679	male	AltLR.C	Enginecmpt.	564469	female
AE46.J2	FJB	564037	female	AltUR.A	Enginecmpt.	563746	female
AE46.J3	FJB	565957	male	AltUR.B	Enginecmpt.	560815	female
AE47.J1	RH_console	563679	male	AltUR.C	Enginecmpt.	564469	female
AE47.J2	RH_console	564037	female	B85	Engine_Cmpt	563815	male
AE47.J3	RH_console	565957	male	B96	Engine_Cmpt	563821	male
AE48.J1	RH_console	563679	male	B96B	Engine_Cmpt	563823	male
AE48.J2	RH_console	564037	female	B97	Engine_Cmpt	563816	male
AE48.J3	RH_console	565957	male	B98	Engine_Cmpt	563817	male
AE49.J1	RJB	563679	male	B99	Engine_Cmpt	563815	male
AE49.J2	RJB	564037	male	B115A	Enginecmpt.	564226	male
AE49.J3	RJB	565957	male	B142C	Condensercmpt.	563793	male
AE50.J1	RJB	563679	male	B310	Enginecmpt.	565967	male
AE50.J2	RJB	564037	male	C1	FJB	563589	male
AE50.J3	RJB	565957	male	C1	FJB	563590	female
AE51.J1	RJB	563679	male	C1S	FJB	563589	male
AE51.J2	RJB	564037	female	C1S	FJB	563590	female
AE51.J3	RJB	565957	male	C2	Service_Cmpt	563580	male
AE52.J1	RJB	563679	male	C2	Service_Cmpt	563581	female
AE52.J2	RJB	564037	female	C2A	FJB	563580	male
AE52.J3	RJB	565957	male	C2A	FJB	563581	female
AE53.J1	Parcelrack	563679	male	C2B	FJB	564034	male
AE53.J2	Parcelrack	564037	female	C2B	FJB	564035	female
AE53.J3	Parcelrack	565957	male	C3_plug	RJB	563589	male
AE54.J1	Evaporatorcmpt.	563679	male	C3_socket	RJB	563590	female
AE54.J2	Evaporatorcmpt.	564037	female	C3AP	FJB	563589	male
AE54.J3	Evaporatorcmpt.	565957	male	C3AP	FJB	563590	female
AE55.J1	Dash	563679	male	C3AS	FJB	563589	male
AE55.J2	Dash	564037	female	C3AS	FJB	563590	female
AE55.J3	Dash	564004	male	C3S	RJB	563593	male
AE56.J1	Dash	563679	male	C3S	RJB	563590	female
AE56.J2	Dash	564037	male	C4	FJB	563580	male
AE56.J3	Dash	564004	male	C4	FJB	563581	female
AE57.J1	WCLcmpt.	563679	male	C5	FJB	563589	male
AE57.J2	WCLcmpt.	564037	male	C5	FJB	563590	female
AE57.J3	WCLcmpt.	564004	male	C5S	FJB	563589	male
AltLL.A	Enginecmpt.	563746	female	C5S	FJB	563590	female
AltLL.B	Enginecmpt.	560815	female	C6	FJB	563582	male

CONNECTORS LIST

No	Location	Part #	Gender	No	Location	Part #	Gender
C6	FJB	563583	female	C26	Ureacmpt.	563226	male
C7	Service_Cmpt	562581	male	C26	Ureacmpt.	563613	female
C7	Service_Cmpt	562583	female	C26A	Ureacmpt.	568110	male
C8	FJB	563227	male	C26A	Ureacmpt.	568109	female
C8	FJB	563614	female	C26B	Ureacmpt.	563227	male
C9	RJB	561986	male	C26B	Ureacmpt.	563614	female
C9	RJB	561987	female	C29	4rd_Lugg_Cmpt	563651	male
C10	Engine_Cmpt	562581	male	C29	3rd_Lugg_Cmpt	563652	female
C10	Engine_Cmpt	562583	female	C30	3rd_Lugg_Cmpt	561710	male
C11	Service_Cmpt	563580	male	C30	3rd_Lugg_Cmpt	561709	female
C11	Service_Cmpt	563581	female	C31W	Parcelrack	563227	male
C12	Engine_Cmpt	562581	male	C31W	Parcelrack	563614	female
C12	Engine_Cmpt	562583	female	C32	lavatory	561734	male
C13_plug	RH_Console	563589	male	C32	Lavatory	561735	female
C13_socket	RH_Console	563590	female	C32W	WCLcmpt.	561669	male
C13S	RH_Console	563589	male	C32W	WCLcmpt.	561670	female
C13S	RH_Console	563590	female	C33	WCLcmpt.	564034	male
C14	WCLsystem	561550	male	C33	WCLcmpt.	564035	female
C14	WCLsystem	561667	female	C34	RH_Console	561986	male
C15A	Evapotatorcmpt.	568110	male	C34	RH_Console	561987	female
C15A	Evaporatotcmpt.	568109	female	C36	FJB	561986	male
C16	RJB	561577	male	C36	FJB	561987	female
C16	RJB	561605	female	C37	Parcel_Rack_LH	562557	male
C17	RJB	560195	male	C37	Parcel_Rack_LH	562558	female
C17	RJB	560169	female	C38	Parcelrack	562555	male
C18	FJB	561986	male	C38	Parcelrack	562556	female
C18	FJB	561987	female	C39	Parcelrack	562503	male
C19	RJB	561986	male	C39	Parcelrack	562507	female
C19	RJB	561987	female	C39A	Firesuppressioncmpt.	561782	male
C20A	Evap_Cmpt	562485	male	C39A	Firesuppressioncmpt.	561781	female
C20A	Evap_Cmpt	562486	female	C40	Dash	562485	male
C20B	Evap_Cmpt	562485	male	C40	Dash	562486	female
C20B	Evap_Cmpt	562486	female	C41	RJB	561782	male
C23	Evaporatorcmpt.	564034	male	C41	RJB	561781	female
C23	Evaporatorcmpt.	564035	female	C44_plug	FJB	561577	male
C24_plug	Evap_Cmpt	561690	male	C44_socket	FJB	561605	female
C24_socket	Evap_Cmpt	561566	female	C45	FJB	561643	male
C25	Parcel_Rack_LH	561550	male	C45	FJB	561642	female
C25	Parcel_Rack_LH	561667	female	C46	3rdlugg.cmpt.	562549	male

CONNECTORS LIST

No	Location	Part #	Gender	No	Location	Part #	Gender
C46	3rdlugg.cmpt.	562550	female	C90	RJB	563582	male
C47	FJB	565207	male	C90	RJB	563583	female
C48	RJB	565208	male	C91	RJB	562285	male
C49	FJB	562005	male	C91	RJB	562282	female
C49	FJB	561714	female	C94_plug	FJB	563589	male
C50	RJB	568110	male	C94_socket	FJB	563590	female
C50	RJB	568109	female	C96	FJB	561646	male
C54	Engine_Cmpt.	563226	male	C96	FJB	561645	female
C54	Engine_Cmpt.	563613	female	C97	FJB	561643	male
C54A	Ureacmpt.	568110	male	C97	FJB	561642	female
C54A	Ureacmpt.	568109	female	C99	Enginecmpt.	562581	male
C54B	Engine_Cmpt.	562477	male	C99	Enginecmpt.	562583	female
C54B	Engine_Cmpt.	562479	female	C100	Evaporatorcmpt.	562477	male
C55	Evap_Cmpt	561577	male	C100	Evaporatorcmpt.	562479	female
C55	Evap_Cmpt	561605	female	C100S	Evaporator_Cmpt.	562477	male
C59	RJB	561643	male	C100S	Evaporator_Cmpt.	562479	female
C59	RJB	561642	female	C101	Service_Cmpt	561690	male
C63	Entrace_Door	562581	male	C101	Service_Cmpt	561566	female
C63	Entrace_Door	562583	female	C103_plug	FJB	562485	male
C64	Enginecmpt.	568110	male	C103_socket	FJB	562486	female
C64	Enginecmpt.	568109	female	C105_plug	FJB	562581	male
C66_plug	Evap_Cmpt	561577	male	C105_socket	FJB	562583	female
C66_socket	Evap_Cmpt	561605	female	C106_plug	FJB	562581	male
C67	Parcelrack	561734	male	C106_socket	FJB	562583	female
C67	Parcelrack	561735	female	C107A	Enginecmpt.	562885	female
C70	FJB	562557	male	C107A	Enginecmpt.	562884	female
C70	FJB	562558	female	C107B	Enginecmpt.	562885	female
C71	FJB	561646	male	C107B	Enginecmpt.	562884	female
C71	FJB	561645	female	C107C	Enginecmpt.	562885	female
C72	FJB	561646	male	C107C	Enginecmpt.	562884	female
C72	FJB	561645	female	C108	Dash	562557	male
C74	FJB	561645	female	C108	dash	562558	female
C74	FJB	561646	male	C110	Dash	568110	male
C87	Engine_Cmpt	562485	male	C110	Dash	568109	female
C87	Engine_Cmpt	562486	female	C119A	Rear_engine_door	568110	male
C88	WCL_Cmpt.	563226	male	C119A	Rear_engine_door	568109	female
C88	WCL_Cmpt.	563613	female	C131A	Engine_Cmpt	561782	male

CONNECTORS LIST

No	Location	Part #	Gender	No	Location	Part #	Gender
C131A	Engine_Cmpt	561781	female	C279	Service_Cmpt	562477	male
C131B	Engine_Cmpt	561782	male	C279	Service_Cmpt	562479	female
C131B	Engine_Cmpt	561781	female	C284	Parcel_Rack	561782	male
C144	RJB	560852	male	C284	Parcel_Rack	561781	female
C144	RJB	560851	female	C284_1	Parcel_Rack	561782	male
C152	Cond_Cmpt	561611	male	C284_1	Parcel_Rack	561781	female
C152	Cond_Cmpt	561610	female	C284_2	Parcel_Rack	561782	male
C170	LH_Console	561637	male	C284_2	Parcel_Rack	561781	female
C170	LH_Console	561636	female	C284_3	Parcel_Rack	561782	male
C171	LH_Console	561646	male	C284_3	Parcel_Rack	561781	female
C171	LH_Console	561645	female	C284_4	Parcel_Rack	561782	male
C193_plug	RJB	563589	male	C284_4	Parcel_Rack	561781	female
C193_socket	RJB	563590	female	C284_5	Parcel_Rack	561782	male
C194	FJB	563589	male	C284_5	Parcel_Rack	561781	female
C194	FJB	563590	female	C284_6	Parcel_Rack	561782	male
C195	dash	563347	male	C284_6	Parcel_Rack	561781	female
C195	dash	560489	female	C298	Parcelrack	561782	male
C206	Parcel_Rack_RH	562503	male	C298	Parcelrack	561781	female
C206	Parcel_Rack_RH	562507	female	C333	Upper_front	561550	male
C207	Parcel_Rack_LH	562503	male	C333	Upper_front	561667	female
C207	Parcel_Rack_LH	562507	female	C355	RJB	563582	male
C213	Parcel_Rack_LH	561515	male	C355	RJB	565887	female
C213	Parcel_Rack_LH	561552	female	C356	Parcelrack	561710	male
C222	FJB	562477	male	C356	Parcelrack	561709	female
C222	FJB	562479	female	C357	Parcelrack	561847	male
C223	FJB	563227	male	C357	Parcelrack	561862	female
C223	FJB	563614	female	C380A	Dash	564222	male
C224	FJB	561637	male	C380A	Dash	564224	female
C224	FJB	561636	female	C381	Parcel_Rack	561847	male
C225	FJB	562650	male	C381	Parcel_Rack	561862	female
C225	FJB	562649	female	C382	Under_Seat	561580	male
C226	FJB	562650	male	C382	Under_Seat	561582	female
C226	FJB	562649	female	C397	RJB	562285	male
C266	Parcelrack	561782	male	C397	RJB	562282	female
C266	Parcelrack	561781	female	C430	LH_Console	562363	male
C267	Parcelrack	561782	male	C430	LH_Console	561188	female
C267	Parcelrack	561781	female	C452	Dash	561669	male

CONNECTORS LIST

No	Location	Part #	Gender	No	Location	Part #	Gender
C452	Dash	561670	female	C582	FJB	561690	female
C463	Rearaxlecmpt.	568111	male	C582	FJB	561566	female
C463	Rearaxlecmpt.	568112	female	C601	LHRoofWinAjar	561476	male
C464	FJB	564222	male	C601	LHRoofWinAjar	561477	female
C464	FJB	564224	female	C602	RH_Roof_Win_Ajar	561476	male
C464A	Dash	564222	male	C602	RH_Roof_Win_Ajar	561477	female
C464A	Dash	564224	female	C603	RHRoofWinAjar	561476	male
C464B	FJB	564222	male	C603	RHRoofWinAjar	561477	female
C464B	FJB	564224	female	C614	Passenger_Area	563071	male
C465	Parcelrack	562581	male	C614	Passenger_Area	563040	female
C465	Parcelrack	562583	female	C615	Passenger_Area	563071	male
C506	FJB	561687	male	C615	Passenger_Area	563040	female
C506	FJB	561685	female	C617	Mirror_LH	563801	male
C542	Parcelrack	561550	male	C617	Mirror_LH	563800	female
C542	Parcelrack	561667	female	C618	Mirror_RH	563801	male
C558	Parcelrack	562503	male	C618	Mirror_RH	563800	female
C558	Parcelrack	562507	female	C619_plug		562503	male
C564	Parcelrack	562503	male	C619_socket		562507	female
C564	Parcelrack	562507	female	C700	FJB	561637	male
C564_Sp	Parcelrack	562503	male	C700	FJB	561636	female
C564_Sp	Parcelrack	562507	female	C752_plug	Parcel_Rack	901062	male
C566	Parcelrack	562503	male	C752_socket	Parcel_Rack	901283	female
C566	Parcelrack	562507	female	C753_plug	Parcel_Rack	901062	male
C567	Parcelrack	562503	male	C753_socket	Parcel_Rack	901283	female
C567	Parcelrack	562507	female	C766	Parcelrack	561662	male
C575	Parcel_Rack_RH	562503	male	C766	Parcelrack	561661	female
C575	Parcel_Rack_RH	562507	female	C768	Parcel_Rack	901062	male
C576B	Parcel_Rack_RH	562006	male	C768	Parcel_Rack	901283	female
C576B	Parcel_Rack_RH	560908	female	C769	Parcel_Rack	901062	male
C576BB	Parcelrack	562006	male	C769	Parcel_Rack	901283	female
C576BB	Parcelrack	560908	female	C777	Dash	562477	male
C577A	Parcel_Rack	562006	male	C777	Dash	562479	female
C577A	Parcel_Rack	560908	female	C_A60DB	Parcel_Rack	563071	male
C577AA	Parcelrack	562006	male	C_A60DB	Parcel_Rack	563040	female
C577AA	Parcelrack	560908	female	C_A69R	Parcel_Rack	563025	male
C578	Parcel_Rack_LH	562503	male	C_ALT	Enginecmpt.	562581	male
C578	Parcel_Rack_LH	562507	female	C_ALT	Enginecmpt.	562583	female

CONNECTORS LIST

No	Location	Part #	Gender	No	Location	Part #	Gender
C_ALT3	Enginecmpt.	562477	male	CL1	FJB	562485	male
C_ALT3	Enginecmpt.	562479	female	CL1	FJB	562486	female
C_AUDIO_AUX	Parcel_Rack	562557	male	CP1	Passenger_Area	561782	male
C_AUDIO_AUX	Parcel_Rack	562558	female	CP1	Passenger_Area	561781	female
C_Audio_HDMI_L	Parcel_Rack	901062	male	CP2	Passenger_Area	561782	male
C_Audio_HDMI_L	Parcel_Rack	901283	female	CP2	Passenger_Area	561781	female
C_Audio_HDMI_R	Parcel_Rack	901062	male	CP3	Passengersarea	561782	male
C_Audio_HDMI_R	Parcel_Rack	901283	female	CP3	Passengersarea	561781	female
C_AUX	Parcelrack	563071	male	CP4	Passenger_Area	561782	male
C_AUX	Parcelrack	563040	female	CP4	Passenger_Area	561781	female
C_INV1	Parcelrack	562337	male	CP5	Passenger_Area	561782	male
C_INV1	Parcelrack	562338	male	CP5	Passenger_Area	561781	female
C_INV2	Parcelrack	562337	male	CSo53	Rear_axle_cmpt.	561690	male
C_INV2	Parcelrack	562338	male	CSo53	Rear_axle_cmpt.	561566	female
C_LineOut	Parcelrack	563962	male	CSw102	Rear_vehicule	562549	male
C_LineOut	Parcelrack	564489	female	CSw102	Rear_vehicule	562550	female
C_Mo9	Evap_Cmpt	561577	male	CSX1	Engine_Cmpt	563135	male
C_Mo9	Evap_Cmpt	561605	female	CSX1	Engine_Cmpt	563134	female
C_Se51	dash	563589	male	CSX3	Engine_Cmpt	563135	male
C_Se51	dash	563590	female	CSX3	Engine_Cmpt	563134	female
C_USB	Parcel_Rack	562069	male	CT_IN	Rear_Vehicle	560167	male
C_USB	Parcel_Rack	562070	female	CT_IN	Rear_Vehicle	560159	female
CCAN1	FJB	562650	male	CT_Out	Rear_Vehicle	560233	female
CCAN1	FJB	562649	female	EI	Enginecmpt.	563739	male
CCAN2	FJB	562650	male	L1A	Enginecmpt.	564045	female
CCAN2	FJB	562649	female	L16.A	Frontroof	562615	female
CCAN3	FJB	562650	male	L16.B	Frontroof	562615	female
CCAN3	FJB	562649	female	L17.A	Frontroof	562615	female
CCAN4	FJB	562650	male	L17.B	Frontroof	562615	female
CCAN4	FJB	562649	female	L18	Entrance_Door	562549	male
CCust	RJB	562477	male	L19	Entracedoor	562486	female
CCust	RJB	562479	female	L20	Entracedoorstep	562486	female
CFHPR1	Parcelrack	564560	male	L21	Upper_front	562486	female
CIND-1.A	Parcelrack	560908	female	L22	Upper_front	562486	female
CIND-1.B	Parcelrack	560908	female	L23	Upper_front	562486	female
CIND-2.A	Parcelrack	560908	female	L24	Upper_front	562486	female
CIND-2.B	Parcelrack	560908	female	L25	Upper_front	562486	female
CIND-11.A	Parcelrack	560908	female	L26	Upper_front	562486	female
CIND-11.B	Parcelrack	560908	female	L27	Upper_front	562486	female
CINDWC-1.A	Parcelrack	560908	female	L28	Parcelrack	560898	male
CINDWC-1.B	Parcelrack	560908	female	L29	Parcelrack	560898	male

CONNECTORS LIST

No	Location	Part #	Gender	No	Location	Part #	Gender
L30	Parcelrack	560898	male	L57A	Parcelrack	560898	male
L30A.A	Parcelrack	560898	male	L58	Parcelrack	560898	male
L30B.A	Parcelrack	560898	male	L58	Parcelrack	560900	female
L31	Parcelrack	560898	male	L58A	Parcelrack	560898	male
L32	Parcelrack	560898	male	L63	Front_Side_LH	562155	male
L33	Parcelrack	560898	male	L64	Outside_Front_RH	562155	male
L34	Parcelrack	560898	male	L65	Outside_Front_LH	562155	male
L35	Parcelrack	560898	male	L66	Out_Side_Front_LH	562155	male
L36	Parcelrack	560898	male	L67	4th_Lugg_Cmpt	562155	male
L37	Parcelrack	560898	male	L68	4th_Lugg_Cmpt	562155	male
L38	Parcelrack	560898	male	L69	4th_Lugg_Cmpt	562155	male
L39	Parcelrack	560898	male	L70	4th_Lugg_Cmpt	562155	male
L40	Parcelrack	560898	male	L72	Rear_Vehicle	562155	male
L41	Parcelrack	560898	male	L74	Rear_Vehicle	562155	male
L42	Parcelrack	560898	male	L75	Rearenginedoor	562155	male
L43	Parcelrack	560898	male	L76	Rear_engine_door	562155	male
L44	Parcelrack	560898	male	L81.A	Rear_Vehicle	562835	female
L45	Parcelrack	560898	male	L81.B	Rear_Vehicle	562834	male
L46	Parcelrack	560898	male	L82A	Rearvehicule	562348	female
L47	Parcelrack	560898	male	L83A	Rearvehicule	562348	female
L48	Parcelrack	560898	male	L84	Rear_roof	562486	female
L49	Parcelrack	560898	male	L85	Rear_roof	562486	female
L50	Parcelrack	560898	male	L86	Rear_roof	562486	female
L51	Parcelrack	560898	male	L87	Rear_roof	562486	female
L52	Parcelrack	560898	male	L88	Rear_roof	562486	female
L52	Parcelrack	560900	female	L89	Rear_roof	562486	female
L52A	Parcelrack	560898	male	L90	Rear_roof	562486	female
L53	Parcelrack	560898	male	L93.A	Engine_Cmpt.	563069	female
L53	Parcelrack	560900	female	L93.B	Engine_Cmpt.	563069	female
L53A	Parcelrack	560898	male	L94.A	Engine_Cmpt.	563069	female
L54	Parcelrack	560898	male	L94.B	Engine_Cmpt.	563069	female
L54	Parcelrack	560900	female	L95	Outside_Front_LH	562485	male
L54A	Parcelrack	560898	male	L95A	Outside_Front_LH	562485	male
L55	Parcelrack	560898	male	L96	Outside_Front_RH	562485	male
L55	Parcelrack	560900	female	L96A	Outside_Front_RH	562485	male
L55A	Parcelrack	560898	male	L97.A	Outside_Front_LH	563069	female
L56	Parcelrack	560898	male	L97.B	Outside_Front_LH	563069	female
L56	Parcelrack	560900	female	L98.A	Entrance_Door	563069	female
L56A	Parcelrack	560898	male	L98.B	Outside_Front_RH	563069	female
L57	Parcelrack	560898	male	L140	Lavatory	561247	male
L57	Parcelrack	560900	female	L141	Upper_front	561247	male

CONNECTORS LIST

No	Location	Part #	Gender	No	Location	Part #	Gender
L142	Lavatory	562006	male	L195.B	Dash	560488	female
L143	Parcel_rack	561186	male	L199	Enginecmpt.	562848	male
L144	Parcelrack	561186	male	L201	Upper_front	561247	male
L145	Parcelrack	561186	male	L202	Upper_front	561247	male
L146	Parcelrack	561186	male	L203	RH_Console	561690	male
L147	Parcelrack	561186	male	L204	Parcel_Rack_RH	562803	male
L148	Parcelrack	561186	male	L205	Enginecmpt.	562485	male
L149	Parcelrack	561186	male	L206	Parcel_Rack_RH	562803	male
L150	Parcelrack	561186	male	L211	Entrace_Door_step	562486	female
L151	Parcelrack	561186	male	L243	Parcelrack	561186	male
L152	Parcelrack	561186	male	L244	Parcelrack	561186	male
L153	Parcelrack	561186	male	L245	Parcelrack	561186	male
L154	Parcelrack	561186	male	L246	Parcelrack	561186	male
L155	Parcelrack	561186	male	L247	Parcel_rack	561186	male
L156	Parcelrack	561186	male	L248	Parcelrack	561186	male
L157	Parcelrack	561186	male	L249	Parcelrack	561186	male
L158	Parcelrack	561186	male	L250	Parcel_rack	561186	male
L173	Parcelrack	563590	female	L251	Parcel_rack	561186	male
L174A	Parcelrack	563590	female	L252	Parcelrack	561186	male
L175	Engine_Cmpt.	563590	female	L253	Parcel_rack	561186	male
L176	5th_Lugg_Cmpt	561247	male	L254	Parcelrack	561186	male
L177	5th_Lugg_Cmpt	561247	male	L255	Parcel_rack	561186	male
L178	3rd_Lugg_Cmpt	561247	male	L256	Parcelrack	561186	male
L179	3rd_Lugg_Cmpt	561247	male	L257	Parcelrack	561186	male
L180	2nd_Lugg_Cmpt	561247	male	L258	Parcel_rack	561186	male
L181	2nd_Lugg_Cmpt	561247	male	L282	Engine_Cmpt	561690	male
L182	1st_Lugg_Cmpt	561247	male	L285.A	Rear_Vehicle	562835	female
L183	1st_Lugg_Cmpt	561247	male	L285.B	Rear_Vehicle	562834	male
L184	Servicecmpt.	561247	male	L286.A	Rear_Vehicle	562835	female
L185.A	Servicecmpt.	561539	male	L286.B	Rear_Vehicle	562834	male
L185.B	Servicecmpt.	561539	male	L290	Engine_door	562565	female
L186.A	Dash	561539	male	L291	Engine_door	562565	female
L186.B	Dash	561539	male	L298A	Enginecmpt.	563590	female
L187	Engine_Cmpt	561690	male	L306	RJBcmpt.	561247	male
L188	Service_Cmpt	562486	female	L314	Front_vehicle	562789	male
L193.A	Dash	560488	female	L315	Front_vehicle	562789	male
L193.B	Dash	560488	female	L319	Under_WCL_platform	561247	male
L194.A	Dash	562019	female	L350A.A	Rearaxlecmpt.	564552	male
L194.B	Dash	560488	female	L350A.B	Rearaxlecmpt.	563340	male
L195.A	Dash	560488	female	L350A.C	Rearaxlecmpt.	562251	male

CONNECTORS LIST

No	Location	Part #	Gender	No	Location	Part #	Gender
Mic_Driver_1.A	Parcel_rack	560999	male	Mo73	Enginecmpt.	568089	male
Mic_Driver_2.A	Parcel_rack	560999	male	PC1	FJB	562650	male
Mic_Driver_3.A	Parcel_rack	560999	male	PC1	FJB	562649	female
Mic_Guide_1.A	Parcel_rack	560999	male	PF	FJB	561782	male
Mic_Guide_2.A	Parcel_rack	560999	male	PF	FJB	561781	female
Mic_Guide_3.A	Parcel_rack	560999	male	PF1	Passenger_Area	561782	male
Mo3	Dash	561667	female	PF1	Passenger_Area	561781	female
Mo4	Dash	562076	male	Pot1.A	Dash	560488	female
Mo5	Upper_front	561550	male	Pot1.B	Dash	560488	female
Mo6	Front_vehicle	561690	male	Pot1.C	Dash	560488	female
Mo7	Cond_Cmpt	563691	male	PR	Parcelrack	561782	male
Mo8	Cond_Cmpt	563691	male	PR	Parcelrack	561781	female
Mo10	Parcel_rack	561515	male	PR1	Passenger_Area	561782	male
Mo11	Parcel_rack	561515	male	PR1	Passenger_Area	561781	female
Mo12	Engine_Cmpt	561690	male	R3	RJB	563409	male
Mo13	Engine_Cmpt	561690	female	R4	FJB	564496	male
Mo14	Engine_Cmpt	561566	female	R5	RJB	564496	male
Mo15	Front_Ceiling	560900	female	R12	Evap_Cmpt	563409	male
Mo16	Front_Ceiling	560900	female	R20	RJB	564496	male
Mo17	RH_Console	563626	male	R21	FJB	560525	male
Mo18	Fr_Service_Door	562474	male	R26	Evap_Cmpt	564496	male
Mo19	Fr_Service_Door	562474	male	R27	Dash	564496	male
Mo20	Fr_Service_Door	562474	male	R28	FJB	564496	male
Mo21	Upper_front	561186	male	R29	RJB	563409	male
Mo22	RH_Console	561186	male	R30	FJB	564496	male
Mo24	RH_Console	562348	female	R31	FJB	564496	male
Mo25	RH_Console	562348	female	R34	RJB	564210	male
Mo27	Cond_Cmpt	563691	male	R36	Dash	564496	male
Mo28	Cond_Cmpt	563691	male	R37	Dash	564496	male
Mo54	Service_Cmpt	562474	male	R38	FJB	564496	male
Mo61	Parcel_rack	561248	female	R40	RJB	564496	male
Mo65	Enginecmpt.	568089	male	R47	Parcelrack	564496	male
Mo67	Enginecmpt.	568089	male	R_12VISS	Parcel_rack	564496	male
Mo68	Enginecmpt.	568089	male	RadioVolvo1_933.A	Parcel_rack	563960	male
Mo69	Enginecmpt.	568089	male	RadioVolvo1_933.B	Parcel_rack	563962	male
Mo70	Enginecmpt.	568089	male	RadioVolvo1_933.C1	Parcel_rack	563956	male
Mo71	Enginecmpt.	568089	male	RadioVolvo1_933.C2	Parcel_rack	563957	male
Mo72	Enginecmpt.	568089	male	RadioVolvo1_933.C3	Parcel_rack	563958	male

CONNECTORS LIST

No	Location	Part #	Gender	No	Location	Part #	Gender
RadioVolvo2_933.A	Parcel_rack	563960	male	Se20	Evap_Cmpt	562426	male
RadioVolvo2_933.B	Parcel_rack	563962	male	Se21	Dash	561248	female
RadioVolvo2_933.C1	Parcel_rack	563956	male	Se23	Engine_Cmpt	563159	male
RadioVolvo2_933.C2	Parcel_rack	563957	male	Se24	Evap_Cmpt	563758	female
RadioVolvo2_933.C3	Parcel_rack	563958	male	Se25	Passenger_Area	561248	female
RadioVolvo3_933.A	Parcel_rack	563960	male	Se28	Pneumatic_plate	561690	male
RadioVolvo3_933.B	Parcel_rack	563962	male	Se29	Engine_Cmpt	561566	female
RadioVolvo3_933.C1	Parcel_rack	563956	male	Se30	Enginedoor	562877	female
RadioVolvo3_933.C2	Parcel_rack	563957	male	Se31	Enginedoor	562877	female
RadioVolvo3_933.C3	Parcel_rack	563958	male	Se32	Rear_Axle_Cmpt	562426	male
Res3.A	RJB	563590	female	Se33	Rear_Axle_Cmpt	562856	male
Res4	FJB	563590	female	Se34	Rear_Axle_Cmpt	562426	male
Res6	FJB	563590	female	Se35	Rear_Axle_Cmpt	562426	male
Res6A	FJB	563589	male	Se36	Rear_Axle_Cmpt	562427	male
Res6A	FJB	563590	female	Se37	Front_Axle_LH	641132	female
Res6B	FJB	563589	male	Se38	Front_Axle_RH	641132	female
Res6B	FJB	563590	female	Se39	Rear_Axle_LH	641132	female
Res7	dash	563590	female	Se40	Rear_Axle_LH	641132	female
Res15	Engine_Cmpt	561782	male	Se41	Condensor_cmpt.	562877	female
Res31	Ureacmpt.	562350	male	Se45	Servicecmpt.	563409	male
Res32	Ureacmpt.	563764	female	Se46	Rearaxlecmpt.	562348	female
Res53	dash	563590	female	Se49	Engine_Cmpt	561690	male
Res99	dash	563590	female	Se51	Driverseat	563589	male
Se2	Service_Cmpt	561566	female	Se53	Service_Cmpt	563159	female
Se4	Window_RH	561477	female	Se54	Service_Cmpt	563159	female
Se5	Window_RH	561477	female	Se55	Service_Cmpt	563159	female
Se6	Window_RH	561477	female	Se56	WCLdoor	562479	female
Se7	Window_LH	561477	female	Se60	Service_Cmpt	563409	male
Se8	Window_LH	561477	female	Se63	Rearaxlecmpt.	641132	female
Se9	Window_LH	561477	female	Se64	Rearaxlecmpt.	641132	female
Se10	FJB	561477	female	Se65	Dash	564042	female
Se11.A	Cond_Cmpt	560082	female	Se66	FJB	564039	female
Se11.B	Cond_Cmpt	560082	female	Se67	Frontaxlecmpt.	563159	female
Se11.C	Cond_Cmpt	560082	female	Se69	Frontaxlecmpt.	563159	female
Se13	Engine_Cmpt	562350	male	Se74	Rear_Axle_Cmpt	563340	male
Se14.A	Driver_Area	561782	male	Se79	Front_Axle	563340	male
Se14.B	Driver_Area	561781	female	Se94	WCLdoor	562877	female
Se15	RH_Console	560898	male	Se100	WCLdoor	562479	female
Se17	Entrace_Door	560081	female	shell1_1618	Driver_Area	562471	male
Se18	Servicecmpt.	561566	female	So3	RH_Console	641385	male
Se19_P	Service_Cmpt	563677	male	So4	RH_Console	641385	male
Se19_S	Service_Cmpt	563677	male	So5	RH_Console	641385	male

CONNECTORS LIST

No	Location	Part #	Gender	No	Location	Part #	Gender
So6	RH_Console	641385	male	Spk2_L	Parcel_Rack_LH	563994	male
So7	Service_Cmpt	561566	female	Spk2_R	Parcel_Rack_RH	563994	male
So8	Servicecmpt.	641385	male	Spk3_L	Parcel_Rack_LH	563994	male
So9	Enginecmpt.	560016	female	Spk3_R	Parcel_Rack_RH	563994	male
So10	Cond_Cmpt	562485	male	Spk4_L	Parcel_Rack_LH	563994	male
So11	Cond_Cmpt	561566	female	Spk4_R	Parcel_Rack_RH	563994	male
So13	Evap_Cmpt	563204	female	Spk5_L	Parcel_Rack_LH	563994	male
So14	Servicecmpt.	641385	male	Spk5_R	Parcel_Rack_RH	563994	male
So15	Servicecmpt.	641385	male	Spk6_L	Parcel_Rack_LH	563994	male
So16	Servicecmpt.	641385	male	Spk6_R	Parcel_Rack_RH	563994	male
So17	Servicecmpt.	562848	male	Spk7_L	Parcel_Rack_LH	563994	male
So18	Pneumatic_plate	641385	male	Spk7_R	Parcel_Rack_RH	563994	male
So19	Pneumatic_plate	641385	male	Spk8_L	Parcel_Rack_LH	563994	male
So20	Servicecmpt.	641385	male	Spk8_R	Parcel_Rack_RH	563994	male
So21	Front_Axle_Cmpt	564046	female	Spk9_L	Parcel_Rack_LH	563994	male
So22	Front_Axle_Cmpt	564046	female	Spk9_R	Parcel_Rack_RH	563994	male
So23	Rear_Axle_Cmpt	564046	female	Spk10_L	Parcel_Rack_LH	563994	male
So24	Rear_Axle_Cmpt	564046	female	Spk10_R	Parcel_Rack_RH	563994	male
So27	Rearaxlecmpt.	564045	female	Spk11_L	Parcel_Rack_LH	563994	male
So50	Rearaxlecmpt.	564046	female	Spk11_R	Parcel_Rack_RH	563994	male
So52	Rearaxlecmpt.	564045	female	Spk12_L	Parcel_Rack_LH	563994	male
So54	Enginecmpt.	564045	female	Spk12_R	Parcel_Rack_RH	563994	male
spBar4	Enginecmpt.	564135	male	Spk13_L	Parcel_Rack_LH	563994	male
spBar5	Enginecmpt.	564135	male	Spk13_R	Parcel_Rack_RH	563994	male
spBar6	Enginecmpt.	564135	male	Spk14_L	Parcel_Rack_LH	563994	male
spBar7	Enginecmpt.	564135	male	Spk14_R	Parcel_Rack_RH	563994	male
spBar11	Engine_Cmpt.	564135	male	Spk15_L	Parcel_Rack_LH	563994	male
spBar12	Engine_Cmpt.	564135	male	Spk15_R	Parcel_Rack_RH	563994	male
spBar13	Enginecmpt.	564135	male	Spk16_L	Parcel_Rack_LH	563994	male
spBar14	Enginecmpt.	564135	male	Spk16_R	Parcel_Rack_RH	563994	male
spBar15	Enginecmpt.	564135	male	SpkDr_L	Parcel_Rack_LH	563994	male
spBar16	Enginecmpt.	564135	male	SpkDr_R	Parcel_Rack_RH	563994	male
spBar19	Condensorcmpt.	564135	male	Sub1.A	Passenger_Area	564004	female
spBar20	Condensorcmpt.	564135	male	Sub2.A	Passenger_Area	564004	female
spBar21	Condensorcmpt.	564135	male	Sw1.C258	Driver_Area	561188	female
spBar22	Enginecmpt.	564135	male	Sw1.C259	Driver_Area	561186	male
spBar23	Enginecmpt.	564135	male	Sw2	Dash	562763	male
spBar24	Enginecmpt.	564135	male	Sw3	Dash	562763	male
Spk1_L	Parcel_Rack_LH	563994	male	Sw4	Dash	562763	male
Spk1_R	Parcel_Rack_RH	563994	male	Sw5	Dash	562763	male

CONNECTORS LIST

No	Location	Part #	Gender	No	Location	Part #	Gender
Sw6	Dash	562763	male	Sw51.A	1st_Lugg_Cmpt	562485	male
Sw10A	LH_Console	562763	male	Sw51.B	1st_Lugg_Cmpt	562486	female
Sw12	Dash	562763	male	Sw52.A	1st_Lugg_Cmpt	562485	male
Sw14	Dash	562763	male	Sw52.B	1st_Lugg_Cmpt	562486	female
Sw16	Dash	562763	male	Sw55.A	Lavatory	560488	female
Sw17	Dash	562763	male	Sw55.B	Lavatory	560488	female
Sw18A	LH_Console	562763	male	Sw56.A	Lavatory	560488	female
Sw20	Dash	562763	male	Sw56.B	Lavatory	560488	female
Sw21	Dash	562763	male	Sw58	Engine_Cmpt.	563135	male
Sw24	Dash	562763	male	Sw59	Enginecmpt.	563135	male
Sw25	Dash	562763	male	Sw63A	LHConsole	562763	male
Sw26	Dash	562763	male	Sw64.A	Service_Cmpt	560815	female
Sw27	Dash	562763	male	Sw64.B	Service_Cmpt	560815	female
Sw29	Dash	562763	male	Sw82	RJB	563135	male
Sw30	RJB	563135	male	Sw83.A	Dash	560082	female
Sw32	Dash	561477	female	Sw83.B	Dash	560815	female
Sw33	Dash	561476	male	Sw83.C	Dash	560082	female
Sw34	Outside_Front_RH	562477	male	Sw83.D	Dash	560815	female
Sw35	Console	562763	male	Sw85	LH_Console	562749	male
Sw38	LH_Console	562763	male	Sw95.A	WCLdoor	562615	female
Sw39.A	RJB	562403	female	Sw95.B	WCLdoor	562615	female
Sw39.B	RJB	562403	female	Sw95.C	WCLdoor	562615	female
Sw40	LH_Console	561690	male	Sw96.A	WCL_Door	562615	female
Sw41	LH_Console	562749	male	Sw96.B	WCL_Door	562615	female
Sw42	Lugg_Cmpt	561636	female	Sw96.C	WCLdoor	562615	female
Sw43	LH_Console	561690	male	Sw97.A	WCLsystem	562615	female
Sw44.A	FJB	562403	female	Sw97.B	WCLsystem	562615	female
Sw44.B	FJB	562403	female	Sw97.C	WCLsystem	562615	female
Sw45.A	5th_Lugg_Cmpt	562485	male	Sw98.A	WCLsystem	562615	female
Sw45.B	5th_Lugg_Cmpt	562486	female	Sw98.B	WCLsystem	562615	female
Sw46.A	5th_Lugg_Cmpt	562485	male	Sw98.C	WCLsystem	562615	female
Sw46.B	5th_Lugg_Cmpt	562486	female	Sw100	dash	562763	male
Sw47.A	3rd_Lugg_Cmpt	562485	male	Sw107	dash	562763	male
Sw47.B	3rd_Lugg_Cmpt	562486	female	Sw108	dash	562763	male
Sw48.A	3rd_Lugg_Cmpt	562485	male	Sw125.A	Service_Cmpt	561457	female
Sw48.B	3rd_Lugg_Cmpt	562486	female	Sw125.B	Service_Cmpt	561457	female
Sw49.A	2nd_Lugg_Cmpt	562485	male	Sw137	Dash	562763	male
Sw49.B	2nd_Lugg_Cmpt	562486	female	Sw156	LH_Console	562763	male
Sw50.A	2nd_Lugg_Cmpt	562485	male	Sw157	Dash	562763	male
Sw50.B	2nd_Lugg_Cmpt	562486	female	Sw158	Dash	562763	male

CONNECTORS LIST

No	Location	Part #	Gender	No	Location	Part #	Gender
Sw670	dash	562763	male				
sym812_291.A	Parcelrack	565180	female				
VECF1	FJB	563186	male				
VECF2	FJB	563183	male				
VECF3	FJB	563185	male				
VECF4	FJB	563182	male				
VECF9	FJB	563448	male				
VECF10	FJB	563181	male				
VECF11	FJB	563184	male				
VECF12	FJB	563187	male				
VECR1	RJB	563186	male				
VECR2	RJB	563183	male				
VECR3	RJB	563185	male				
VECR4	RJB	563182	male				
VECR9	RJB	563448	male				
VECR10	RJB	563181	male				
VECR11	RJB	563184	male				
VECR12	RJB	563187	male				
VECT3	Rear_vehicule	563718	male				
VECT4	Rear_vehicule	563714	male				
Y80	Engine_Cmpt	563789	male				
Y81	Cond_Cmpt	563793	male				

CONNECTORS LIST

No	Location	Part #	Gender	No	Location	Part #	Gender
24SS_OP	Parcel_Rack_LH	563071	male	A34.J	Enginecmpt.	568118	male
24SS_OP	Parcel_Rack_LH	563040	female	A34.K	Enginecmpt.	564270	male
24SS_OP_2		563071	male	A34.L	Enginecmpt.	564269	male
24SS_OP_2		563040	female	A36.JA	FJB	562767	male
120V_inlet	Rearvehicule	561572	male	A36.JB	FJB	562765	male
A1	RJB	563975	male	A36.JC	FJB	562957	male
A2	FJB	563984	male	A39.P101	Parcel_Rack_LH	563201	male
A3	Dash	562363	male	A39.P901	Parcel_Rack_LH	563953	male
A4.A	Service_Cmpt	562428	female	A41.J1	FJB	563679	male
A4.B	Service_Cmpt	561188	female	A41.J2	FJB	564037	male
A5	Service_Cmpt	562428	female	A41.J3	FJB	564004	male
A6	Engine_Cmpt	562427	male	A60.A	Parcel_Rack_LH	563071	male
A7	Rear_Axle_Cmpt	563979	male	A60.B	Parcel_Rack_LH	562706	female
A9.Cx1	FJB	564041	female	A60.C	Parcel_Rack_LH	901110	male
A9.Cx2	FJB	563678	male	A60.D	Parcel_Rack_LH	901110	male
A9.Cx3	FJB	564037	female	A61.A	Parcel_Rack_LH	562464	male
A9.Cx4	FJB	564038	female	A61.B	Parcel_Rack_LH	562465	male
A10.X1	Engine_Cmpt	563135	male	A65.A	Parcel_Rack_LH	563025	male
A10.X3	Engine_Cmpt	563134	female	A65.B4	Parcel_Rack_LH	bidon	male
A11	LH_Console	563142	male	A65.B5	Parcel_Rack_LH	bidon	male
A14.A	Dash	562766	male	A65.B6	Parcel_Rack_LH	bidon	male
A14.B	Dash	562767	male	A65.D	Parcel_Rack_LH	bidon	male
A14.C	Dash	562765	male	A65.E	Parcelrack	563071	male
A15	Dash	562464	male	A65.G1	Parcel_Rack_LH	563071	male
A17.D	RJB	561932	male	A65.G2	Parcel_Rack_LH	563071	male
A18.J1	FJB	562794	male	A65.G3	Parcel_Rack_LH	563071	male
A18.J2	FJB	562650	male	A65.H1	Parcel_Rack_LH	561716	female
A19	LH_Console	562878	female	A65.H2	Parcel_Rack_LH	561716	female
A20	Parcel_Rack_LH	561477	female	A65.H3	Parcel_Rack_LH	561716	female
A24.A	RH_Console	561890	male	A65.J	Parcel_Rack_LH	562465	male
A24.B	RH_Console	561566	female	A69L.A	Parcel_Rack_LH	563025	male
A24.C	RH_Console	561889	female	A69L.B1	Parcel_Rack_LH	bidon	male
A25	Parcel_Rack_LH	563025	male	A69L.B2	Parcel_Rack_LH	bidon	male
A26.P1	Enginecmpt.	562350	male	A69L.B3	Parcel_Rack_LH	bidon	male
A26.P2	Enginecmpt.	563322	female	A69L.B4	Parcel_Rack_LH	bidon	male
A26.P4	Enginecmpt.	568088	male	A69L.C	Parcel_Rack_LH	bidon	male
A27	Service_Cmpt	562929	male	A69R.A	Parcel_Rack_LH	563025	male
A28	Service_Cmpt	562928	male	A69R.B1	Parcel_Rack_LH	bidon	male
A29	Dash	562464	male	A69R.B2	Parcel_Rack_LH	bidon	male
A33.A	Parcel_Rack_LH	563071	male	A69R.B3	Parcel_Rack_LH	bidon	male
A33.B	Parcel_Rack_LH	562330	female	A69R.B4	Parcel_Rack_LH	bidon	male

CONNECTORS LIST

No	Location	Part #	Gender	No	Location	Part #	Gender
A69R.C	Parcel_Rack_LH	bidon	male	A120.C2	Dashboard	563957	male
A70c	Parcel_Rack_LH	561540	female	A120.C3	Dashboard	563958	male
A77	Parcelrack	564547	male	A121.Vsa	Dash	563679	male
A78	Parcelrack	562583	female	A121.Vsb	Dash	563678	male
A79	Parcelrack	562583	female	A121.Vsc	Dash	564037	male
A80	Parcelrack	562479	female	A121.Vsd	Dash	564118	male
A81.JA	FJB	562767	male	A130	Driver_Area	563226	male
A81.JB	FJB	562765	male	A131.A	Engine_Cmpt	561782	male
A81.JC	FJB	562957	male	A131.B	Engine_Cmpt	561781	female
A83	Parcelrack	565970	female	A137A	Condensercmpt.	20429843	male
A95.A	Parcelrack	564489	female	A138	Cond_Cmpt	563787	male
A95.B	Parcelrack	562706	female	A139	Dash	564501	male
A95.C	Parcelrack	562706	female	A150	Parcelrack	21280133	male
A96	FJB	564073	female	A152.A	Parcelrack	561550	male
A97	Dash	563226	male	A152.B	Parcelrack	563071	male
A97A	FJB	563226	male	A152.C	Parcelrack	563071	male
A97A	FJB	563613	female	A152.D	Parcelrack	563071	male
A97B	FJB	563226	male	A152.E	Parcelrack	563071	male
A97B	FJB	563613	female	A152.F	Parcelrack	563071	male
A99	FJB	564205	male	A152.G	Parcelrack	563071	male
A100	Front_Axle_Cmpt	563758	female	A152.H	Parcelrack	563071	male
A101	Rear_RH_Axle_Cmpt	563758	female	A152.I	Parcelrack	563071	male
A102	Rear_RH_Axle_Cmpt	563758	female	A152.J	Parcelrack	563071	male
A103	Dash	562070	female	A152.K	Parcelrack	562779	male
A107	EngineCmpt.	560336	male	A152.L	Parcelrack	562779	male
A108	RJB	562766	male	AE41.J1	FJB	563679	male
A109A	FJB	564141	male	AE41.J2	FJB	564037	female
A111	RJB	562550	female	AE41.J3	FJB	564004	male
A113.A	Parcel_Rack_LH	563960	male	AE42.J1	FJB	563679	male
A113.B	Parcel_Rack_LH	563962	male	AE42.J2	FJB	564037	female
A113.C1	Parcel_Rack_LH	563956	male	AE42.J3	FJB	564004	male
A113.C2	Parcel_Rack_LH	563957	male	AE43.J1	FJB	563679	male
A113.C3	Parcel_Rack_LH	563958	male	AE43.J2	FJB	564037	male
A114A	Dash	564252	male	AE43.J3	FJB	565957	male
A120.A	Dashboard	563960	male	AE44.J1	FJB	563679	male
A120.B	Dashboard	563962	male	AE44.J2	FJB	564037	female
A120.C1	Dashboard	563956	male	AE44.J3	FJB	565957	male

CONNECTORS LIST

No	Location	Part #	Gender	No	Location	Part #	Gender
AE45.J1	FJB	563679	male	AltLL.C	Enginecmpt.	564469	female
AE45.J2	FJB	564037	female	AltLR.A	enginecmpt.	563746	female
AE45.J3	FJB	565957	male	AltLR.B	Enginecmpt.	560815	female
AE46.J1	FJB	563679	male	AltLR.C	Enginecmpt.	564469	female
AE46.J2	FJB	564037	female	AltUR.A	Enginecmpt.	563746	female
AE46.J3	FJB	565957	male	AltUR.B	Enginecmpt.	560815	female
AE47.J1	RH_console	563679	male	AltUR.C	Enginecmpt.	564469	female
AE47.J2	RH_console	564037	female	B85	Engine_Cmpt	563815	male
AE47.J3	RH_console	565957	male	B96	Engine_Cmpt	563821	male
AE48.J1	RH_console	563679	male	B96B	Engine_Cmpt	563823	male
AE48.J2	RH_console	564037	female	B97	Engine_Cmpt	563816	male
AE48.J3	RH_console	565957	male	B98	Engine_Cmpt	563817	male
AE49.J1	RJB	563679	male	B99	Engine_Cmpt	563815	male
AE49.J2	RJB	564037	male	B115A	Enginecmpt.	564226	male
AE49.J3	RJB	565957	male	B142C	Condensercmpt.	563793	male
AE50.J1	RJB	563679	male	B310	Enginecmpt.	565967	male
AE50.J2	RJB	564037	male	C1	FJB	563589	male
AE50.J3	RJB	565957	male	C1	FJB	563590	female
AE51.J1	RJB	563679	male	C1S	FJB	563589	male
AE51.J2	RJB	564037	female	C1S	FJB	563590	female
AE51.J3	RJB	565957	male	C2	Service_Cmpt	563580	male
AE52.J1	Parcel_Rack_LH	563679	male	C2	Service_Cmpt	563581	female
AE52.J2	Parcel_Rack_LH	564037	female	C2A	FJB	563580	male
AE52.J3	Parcel_Rack_LH	565957	male	C2A	FJB	563581	female
AE53.J1	LR_ParcelRack	563679	male	C2B	FJB	564034	male
AE53.J2	LR_ParcelRack	564037	female	C2B	FJB	564035	female
AE53.J3	LR_ParcelRack	565957	male	C3_plug	RJB	563589	male
AE54.J1	Evaporatorcmpt.	563679	male	C3_socket	RJB	563590	female
AE54.J2	Evaporatorcmpt.	564037	female	C3AP	FJB	563589	male
AE54.J3	Evaporatorcmpt.	565957	male	C3AP	FJB	563590	female
AE55.J1	Dash	563679	male	C3AS	FJB	563589	male
AE55.J2	Dash	564037	female	C3AS	FJB	563590	female
AE55.J3	Dash	564004	male	C3S	RJB	563593	male
AE56.J1	Dash	563679	male	C3S	RJB	563590	female
AE56.J2	Dash	564037	male	C4	FJB	563580	male
AE56.J3	Dash	564004	male	C4	FJB	563581	female
AE57.J1	WCLcmpt.	563679	male	C5	FJB	563589	male
AE57.J2	WCLcmpt.	564037	male	C5	FJB	563590	female
AE57.J3	WCLcmpt.	564004	male	C5S	FJB	563589	male
AltLL.A	Enginecmpt.	563746	female	C5S	FJB	563590	female
AltLL.B	Enginecmpt.	560815	female	C6	FJB	563582	male

CONNECTORS LIST

No	Location	Part #	Gender	No	Location	Part #	Gender
C6	FJB	563583	female	C26	Ureacmpt.	563226	male
C7	Service_Cmpt	562581	male	C26	Ureacmpt.	563613	female
C7	Service_Cmpt	562583	female	C26A	Ureacmpt.	568110	male
C8	FJB	563227	male	C26A	Ureacmpt.	568109	female
C8	FJB	563614	female	C26B	Ureacmpt.	563227	male
C9	RJB	561986	male	C26B	Ureacmpt.	563614	female
C9	RJB	561987	female	C29	4rd_Lugg_Cmpt	563651	male
C10	Engine_Cmpt	562581	male	C29	3rd_Lugg_Cmpt	563652	female
C10	Engine_Cmpt	562583	female	C30	3rd_Lugg_Cmpt	561710	male
C11	Service_Cmpt	563580	male	C30	3rd_Lugg_Cmpt	561709	female
C11	Service_Cmpt	563581	female	C31W	Parcelrack	563227	male
C12	Engine_Cmpt	562581	male	C31W	Parcelrack	563614	female
C12	Engine_Cmpt	562583	female	C32	lavatory	561734	male
C13_plug	RH_Console	563589	male	C32	Lavatory	561735	female
C13_socket	RH_Console	563590	female	C32W	WCLcmpt.	561669	male
C13S	RH_Console	563589	male	C32W	WCLcmpt.	561670	female
C13S	RH_Console	563590	female	C33	WCLcmpt.	564034	male
C14	WCLsystem	561550	male	C33	WCLcmpt.	564035	female
C14	WCLsystem	561667	female	C34	RH_Console	561986	male
C15A	Evapotatorcmpt.	568110	male	C34	RH_Console	561987	female
C15A	Evaporatotcmpt.	568109	female	C36	FJB	561986	male
C16	RJB	561577	male	C36	FJB	561987	female
C16	RJB	561605	female	C37	Parcel_Rack_LH	562557	male
C17	RJB	560195	male	C37	Parcel_Rack_LH	562558	female
C17	RJB	560169	female	C38	Parcelrack	562555	male
C18	FJB	561986	male	C38	Parcelrack	562556	female
C18	FJB	561987	female	C39	Parcelrack	562503	male
C19	RJB	561986	male	C39	Parcelrack	562507	female
C19	RJB	561987	female	C39A	Firesuppressioncmpt.	561782	male
C20A	Evap_Cmpt	562485	male	C39A	Firesuppressioncmpt.	561781	female
C20A	Evap_Cmpt	562486	female	C40	Dash	562485	male
C20B	Evap_Cmpt	562485	male	C40	Dash	562486	female
C20B	Evap_Cmpt	562486	female	C41	RJB	561782	male
C23	Evaporatorcmpt.	564034	male	C41	RJB	561781	female
C23	Evaporatorcmpt.	564035	female	C44_plug	FJB	561577	male
C24_plug	Evap_Cmpt	561690	male	C44_socket	FJB	561605	female
C24_socket	Evap_Cmpt	561566	female	C45	FJB	561643	male
C25	Parcel_Rack_LH	561550	male	C45	FJB	561642	female
C25	Parcel_Rack_LH	561667	female	C46	3rdlugg.cmpt.	562549	male

CONNECTORS LIST

No	Location	Part #	Gender	No	Location	Part #	Gender
C46	3rdlugg.cmpt.	562550	female	C90	RJB	563582	male
C47	FJB	565207	male	C90	RJB	563583	female
C48	RJB	565208	male	C91	RJB	562285	male
C49	FJB	562005	male	C91	RJB	562282	female
C49	FJB	561714	female	C94_plug	FJB	563589	male
C50	RJB	568110	male	C94_socket	FJB	563590	female
C50	RJB	568109	female	C96	FJB	561646	male
C54	Engine_Cmpt.	563226	male	C96	FJB	561645	female
C54	Engine_Cmpt.	563613	female	C97	FJB	561643	male
C54A	Ureacmpt.	568110	male	C97	FJB	561642	female
C54A	Ureacmpt.	568109	female	C99	Enginecmpt.	562581	male
C54B	Engine_Cmpt.	562477	male	C99	Enginecmpt.	562583	female
C54B	Engine_Cmpt.	562479	female	C100	Evaporatorcmpt.	562477	male
C55	Evap_Cmpt	561577	male	C100	Evaporatorcmpt.	562479	female
C55	Evap_Cmpt	561605	female	C100S	Evaporator_Cmpt.	562477	male
C59	RJB	561643	male	C100S	Evaporator_Cmpt.	562479	female
C59	RJB	561642	female	C101	Service_Cmpt	561690	male
C63	Entrace_Door	562581	male	C101	Service_Cmpt	561566	female
C63	Entrace_Door	562583	female	C103_plug	FJB	562485	male
C64	Enginecmpt.	568110	male	C103_socket	FJB	562486	female
C64	Enginecmpt.	568109	female	C105_plug	FJB	562581	male
C66_plug	Evap_Cmpt	561577	male	C105_socket	FJB	562583	female
C66_socket	Evap_Cmpt	561605	female	C106_plug	FJB	562581	male
C67	Parcelrack	561734	male	C106_socket	FJB	562583	female
C67	Parcelrack	561735	female	C107A	Enginecmpt.	562885	female
C70	FJB	562557	male	C107A	Enginecmpt.	562884	female
C70	FJB	562558	female	C107B	Enginecmpt.	562885	female
C71	FJB	561646	male	C107B	Enginecmpt.	562884	female
C71	FJB	561645	female	C107C	Enginecmpt.	562885	female
C72	FJB	561646	male	C107C	Enginecmpt.	562884	female
C72	FJB	561645	female	C108	Dash	562557	male
C74	FJB	561645	female	C108	dash	562558	female
C74	FJB	561646	male	C110	Dash	568110	male
C87	Engine_Cmpt	562485	male	C110	Dash	568109	female
C87	Engine_Cmpt	562486	female	C119A	Rear_engine_door	568110	male
C88	WCL_Cmpt.	563226	male	C119A	Rear_engine_door	568109	female
C88	WCL_Cmpt.	563613	female	C131A	Engine_Cmpt	561782	male

CONNECTORS LIST

No	Location	Part #	Gender	No	Location	Part #	Gender
C131A	Engine_Cmpt	561781	female	C279	Service_Cmpt	562477	male
C131B	Engine_Cmpt	561782	male	C279	Service_Cmpt	562479	female
C131B	Engine_Cmpt	561781	female	C284	Parcel_Rack	561782	male
C144	RJB	560852	male	C284	Parcel_Rack	561781	female
C144	RJB	560851	female	C284_1	Parcel_Rack	561782	male
C152	Cond_Cmpt	561611	male	C284_1	Parcel_Rack	561781	female
C152	Cond_Cmpt	561610	female	C284_2	Parcel_Rack	561782	male
C170	LH_Console	561637	male	C284_2	Parcel_Rack	561781	female
C170	LH_Console	561636	female	C284_3	Parcel_Rack	561782	male
C171	LH_Console	561646	male	C284_3	Parcel_Rack	561781	female
C171	LH_Console	561645	female	C284_4	Parcel_Rack	561782	male
C193_plug	RJB	563589	male	C284_4	Parcel_Rack	561781	female
C193_socket	RJB	563590	female	C284_5	Parcel_Rack	561782	male
C194	FJB	563589	male	C284_5	Parcel_Rack	561781	female
C194	FJB	563590	female	C284_6	Parcel_Rack	561782	male
C195	dash	563347	male	C284_6	Parcel_Rack	561781	female
C195	dash	560489	female	C298	Parcelrack	561782	male
C206	Parcel_Rack_RH	562503	male	C298	Parcelrack	561781	female
C206	Parcel_Rack_RH	562507	female	C333	Upper_front	561550	male
C207	Parcel_Rack_LH	562503	male	C333	Upper_front	561667	female
C207	Parcel_Rack_LH	562507	female	C355	RJB	563582	male
C213	Parcel_Rack_LH	561515	male	C355	RJB	565887	female
C213	Parcel_Rack_LH	561552	female	C356	Parcelrack	561710	male
C222	FJB	562477	male	C356	Parcelrack	561709	female
C222	FJB	562479	female	C357	Parcelrack	561847	male
C223	FJB	563227	male	C357	Parcelrack	561862	female
C223	FJB	563614	female	C380A	Dash	564222	male
C224	FJB	561637	male	C380A	Dash	564224	female
C224	FJB	561636	female	C381	Parcel_Rack	561847	male
C225	FJB	562650	male	C381	Parcel_Rack	561862	female
C225	FJB	562649	female	C382	Under_Seat	561580	male
C226	FJB	562650	male	C382	Under_Seat	561582	female
C226	FJB	562649	female	C397	RJB	562285	male
C266	Parcelrack	561782	male	C397	RJB	562282	female
C266	Parcelrack	561781	female	C430	LH_Console	562363	male
C267	Parcelrack	561782	male	C430	LH_Console	561188	female
C267	Parcelrack	561781	female	C452	Dash	561669	male

CONNECTORS LIST

No	Location	Part #	Gender	No	Location	Part #	Gender
C452	Dash	561670	female	C582	FJB	561690	female
C463	Rearaxlecmpt.	568111	male	C582	FJB	561566	female
C463	Rearaxlecmpt.	568112	female	C601	LHRoofWinAjar	561476	male
C464	FJB	564222	male	C601	LHRoofWinAjar	561477	female
C464	FJB	564224	female	C602	RH_Roof_Win_Ajar	561476	male
C464A	Dash	564222	male	C602	RH_Roof_Win_Ajar	561477	female
C464A	Dash	564224	female	C603	RHRoofWinAjar	561476	male
C464B	FJB	564222	male	C603	RHRoofWinAjar	561477	female
C464B	FJB	564224	female	C614	Passenger_Area	563071	male
C465	Parcelrack	562581	male	C614	Passenger_Area	563040	female
C465	Parcelrack	562583	female	C615	Passenger_Area	563071	male
C506	FJB	561687	male	C615	Passenger_Area	563040	female
C506	FJB	561685	female	C617	Mirror_LH	563801	male
C542	Parcelrack	561550	male	C617	Mirror_LH	563800	female
C542	Parcelrack	561667	female	C618	Mirror_RH	563801	male
C558	Parcelrack	562503	male	C618	Mirror_RH	563800	female
C558	Parcelrack	562507	female	C619_plug		562503	male
C564	Parcelrack	562503	male	C619_socket		562507	female
C564	Parcelrack	562507	female	C700	FJB	561637	male
C564_Sp	Parcelrack	562503	male	C700	FJB	561636	female
C564_Sp	Parcelrack	562507	female	C752_plug	Parcel_Rack	901062	male
C566	Parcelrack	562503	male	C752_socket	Parcel_Rack	901283	female
C566	Parcelrack	562507	female	C753_plug	Parcel_Rack	901062	male
C567	Parcelrack	562503	male	C753_socket	Parcel_Rack	901283	female
C567	Parcelrack	562507	female	C766	Parcelrack	561662	male
C575	Parcel_Rack_RH	562503	male	C766	Parcelrack	561661	female
C575	Parcel_Rack_RH	562507	female	C768	Parcel_Rack	901062	male
C576B	Parcel_Rack_RH	562006	male	C768	Parcel_Rack	901283	female
C576B	Parcel_Rack_RH	560908	female	C769	Parcel_Rack	901062	male
C576BB	Parcelrack	562006	male	C769	Parcel_Rack	901283	female
C576BB	Parcelrack	560908	female	C777	Dash	562477	male
C577A	Parcel_Rack	562006	male	C777	Dash	562479	female
C577A	Parcel_Rack	560908	female	C_A60DB	Parcel_Rack	563071	male
C577AA	Parcelrack	562006	male	C_A60DB	Parcel_Rack	563040	female
C577AA	Parcelrack	560908	female	C_A69R	Parcel_Rack	563025	male
C578	Parcel_Rack_LH	562503	male	C_ALT	Enginecmpt.	562581	male
C578	Parcel_Rack_LH	562507	female	C_ALT	Enginecmpt.	562583	female

CONNECTORS LIST

No	Location	Part #	Gender	No	Location	Part #	Gender
C_ALT3	Enginecmpt.	562477	male	CL1	FJB	562485	male
C_ALT3	Enginecmpt.	562479	female	CL1	FJB	562486	female
C_AUDIO_AUX	Parcel_Rack	562557	male	CP1	Passenger_Area	561782	male
C_AUDIO_AUX	Parcel_Rack	562558	female	CP1	Passenger_Area	561781	female
C_Audio_HDMI_L	Parcel_Rack	901062	male	CP2	Passenger_Area	561782	male
C_Audio_HDMI_L	Parcel_Rack	901283	female	CP2	Passenger_Area	561781	female
C_Audio_HDMI_R	Parcel_Rack	901062	male	CP3	Passengersarea	561782	male
C_Audio_HDMI_R	Parcel_Rack	901283	female	CP3	Passengersarea	561781	female
C_AUX	Parcelrack	563071	male	CP4	Passenger_Area	561782	male
C_AUX	Parcelrack	563040	female	CP4	Passenger_Area	561781	female
C_INV1	Parcelrack	562337	male	CP5	Passenger_Area	561782	male
C_INV1	Parcelrack	562338	male	CP5	Passenger_Area	561781	female
C_INV2	Parcelrack	562337	male	CSo53	Rear_axle_cmpt.	561690	male
C_INV2	Parcelrack	562338	male	CSo53	Rear_axle_cmpt.	561566	female
C_LineOut	Parcelrack	563962	male	CSw102	Rear_vehicule	562549	male
C_LineOut	Parcelrack	564489	female	CSw102	Rear_vehicule	562550	female
C_Mo9	Evap_Cmpt	561577	male	CSX1	Engine_Cmpt	563135	male
C_Mo9	Evap_Cmpt	561605	female	CSX1	Engine_Cmpt	563134	female
C_Se51	dash	563589	male	CSX3	Engine_Cmpt	563135	male
C_Se51	dash	563590	female	CSX3	Engine_Cmpt	563134	female
C_USB	Parcel_Rack	562069	male	CT_IN	Rear_Vehicle	560167	male
C_USB	Parcel_Rack	562070	female	CT_IN	Rear_Vehicle	560159	female
CCAN1	FJB	562650	male	CT_Out	Rear_Vehicle	560233	female
CCAN1	FJB	562649	female	EI	Enginecmpt.	563739	male
CCAN2	FJB	562650	male	L1A	Enginecmpt.	560774	female
CCAN2	FJB	562649	female	L16.A	Frontroof	562615	female
CCAN3	FJB	562650	male	L16.B	Frontroof	562615	female
CCAN3	FJB	562649	female	L17.A	Frontroof	562615	female
CCAN4	FJB	562650	male	L17.B	Frontroof	562615	female
CCAN4	FJB	562649	female	L18	Entrance_Door	562549	male
CCust	RJB	562477	male	L19	Entracedoor	562486	female
CCust	RJB	562479	female	L20	Entracedoorstep	562486	female
CFHPR1	Parcelrack	564560	male	L21	Upper_front	562486	female
CIND-1.A	Parcelrack	560908	female	L22	Upper_front	562486	female
CIND-1.B	Parcelrack	560908	female	L23	Upper_front	562486	female
CIND-2.A	Parcelrack	560908	female	L24	Upper_front	562486	female
CIND-2.B	Parcelrack	560908	female	L25	Upper_front	562486	female
CIND-11.A	Parcelrack	560908	female	L26	Upper_front	562486	female
CIND-11.B	Parcelrack	560908	female	L27	Upper_front	562486	female
CINDWC-1.A	Parcelrack	560908	female	L28	Parcelrack	560898	male
CINDWC-1.B	Parcelrack	560908	female	L29	Parcelrack	560898	male

CONNECTORS LIST

No	Location	Part #	Gender	No	Location	Part #	Gender
L30	Parcelrack	560898	male	L57A	Parcelrack	560898	male
L30A.A	Parcelrack	560898	male	L58	Parcelrack	560898	male
L30B.A	Parcelrack	560898	male	L58	Parcelrack	560900	female
L31	Parcelrack	560898	male	L58A	Parcelrack	560898	male
L32	Parcelrack	560898	male	L63	Front_Side_LH	562155	male
L33	Parcelrack	560898	male	L64	Outside_Front_RH	562155	male
L34	Parcelrack	560898	male	L65	Outside_Front_LH	562155	male
L35	Parcelrack	560898	male	L66	Out_Side_Front_LH	562155	male
L36	Parcelrack	560898	male	L67	4th_Lugg_Cmpt	562155	male
L37	Parcelrack	560898	male	L68	4th_Lugg_Cmpt	562155	male
L38	Parcelrack	560898	male	L69	4th_Lugg_Cmpt	562155	male
L39	Parcelrack	560898	male	L70	4th_Lugg_Cmpt	562155	male
L40	Parcelrack	560898	male	L72	Rear_Vehicle	562155	male
L41	Parcelrack	560898	male	L74	Rear_Vehicle	562155	male
L42	Parcelrack	560898	male	L75	Rearenginedoor	562155	male
L43	Parcelrack	560898	male	L76	Rear_engine_door	562155	male
L44	Parcelrack	560898	male	L81.A	Rear_Vehicle	562835	female
L45	Parcelrack	560898	male	L81.B	Rear_Vehicle	562834	male
L46	Parcelrack	560898	male	L82A	Rearvehicule	562348	female
L47	Parcelrack	560898	male	L83A	Rearvehicule	562348	female
L48	Parcelrack	560898	male	L84	Rear_roof	562486	female
L49	Parcelrack	560898	male	L85	Rear_roof	562486	female
L50	Parcelrack	560898	male	L86	Rear_roof	562486	female
L51	Parcelrack	560898	male	L87	Rear_roof	562486	female
L52	Parcelrack	560898	male	L88	Rear_roof	562486	female
L52	Parcelrack	560900	female	L89	Rear_roof	562486	female
L52A	Parcelrack	560898	male	L90	Rear_roof	562486	female
L53	Parcelrack	560898	male	L93.A	Engine_Cmpt.	563069	female
L53	Parcelrack	560900	female	L93.B	Engine_Cmpt.	563069	female
L53A	Parcelrack	560898	male	L94.A	Engine_Cmpt.	563069	female
L54	Parcelrack	560898	male	L94.B	Engine_Cmpt.	563069	female
L54	Parcelrack	560900	female	L95	Outside_Front_LH	562485	male
L54A	Parcelrack	560898	male	L95A	Outside_Front_LH	562485	male
L55	Parcelrack	560898	male	L96	Outside_Front_RH	562485	male
L55	Parcelrack	560900	female	L96A	Outside_Front_RH	562485	male
L55A	Parcelrack	560898	male	L97.A	Outside_Front_LH	563069	female
L56	Parcelrack	560898	male	L97.B	Outside_Front_LH	563069	female
L56	Parcelrack	560900	female	L98.A	Entrance_Door	563069	female
L56A	Parcelrack	560898	male	L98.B	Outside_Front_RH	563069	female
L57	Parcelrack	560898	male	L140	Lavatory	561247	male
L57	Parcelrack	560900	female	L141	Upper_front	561247	male

CONNECTORS LIST

No	Location	Part #	Gender	No	Location	Part #	Gender
L142	Lavatory	562006	male	L195.B	Dash	560488	female
L143	Parcel_rack	561186	male	L199	Enginecmpt.	562848	male
L144	Parcelrack	561186	male	L201	Upper_front	561247	male
L145	Parcelrack	561186	male	L202	Upper_front	561247	male
L146	Parcelrack	561186	male	L203	RH_Console	561690	male
L147	Parcelrack	561186	male	L204	Parcel_Rack_RH	562803	male
L148	Parcelrack	561186	male	L205	Enginecmpt.	562485	male
L149	Parcelrack	561186	male	L206	Parcel_Rack_RH	562803	male
L150	Parcelrack	561186	male	L211	Entrace_Door_step	562486	female
L151	Parcelrack	561186	male	L243	Parcelrack	561186	male
L152	Parcelrack	561186	male	L244	Parcelrack	561186	male
L153	Parcelrack	561186	male	L245	Parcelrack	561186	male
L154	Parcelrack	561186	male	L246	Parcelrack	561186	male
L155	Parcelrack	561186	male	L247	Parcel_rack	561186	male
L156	Parcelrack	561186	male	L248	Parcelrack	561186	male
L157	Parcelrack	561186	male	L249	Parcelrack	561186	male
L158	Parcelrack	561186	male	L250	Parcel_rack	561186	male
L173	Parcelrack	563590	female	L251	Parcel_rack	561186	male
L174A	Parcelrack	563590	female	L252	Parcelrack	561186	male
L175	Engine_Cmpt.	563590	female	L253	Parcel_rack	561186	male
L176	5th_Lugg_Cmpt	561247	male	L254	Parcelrack	561186	male
L177	5th_Lugg_Cmpt	561247	male	L255	Parcel_rack	561186	male
L178	3rd_Lugg_Cmpt	561247	male	L256	Parcelrack	561186	male
L179	3rd_Lugg_Cmpt	561247	male	L257	Parcelrack	561186	male
L180	2nd_Lugg_Cmpt	561247	male	L258	Parcel_rack	561186	male
L181	2nd_Lugg_Cmpt	561247	male	L282	Engine_Cmpt	561690	male
L182	1st_Lugg_Cmpt	561247	male	L285.A	Rear_Vehicle	562835	female
L183	1st_Lugg_Cmpt	561247	male	L285.B	Rear_Vehicle	562834	male
L184	Servicecmpt.	561247	male	L286.A	Rear_Vehicle	562835	female
L185.A	Servicecmpt.	561539	male	L286.B	Rear_Vehicle	562834	male
L185.B	Servicecmpt.	561539	male	L290	Engine_door	562565	female
L186.A	Dash	561539	male	L291	Engine_door	562565	female
L186.B	Dash	561539	male	L298A	Enginecmpt.	563590	female
L187	Engine_Cmpt	561690	male	L306	RJBcmpt.	561247	male
L188	Service_Cmpt	562486	female	L314	Front_vehicle	562789	male
L193.A	Dash	560488	female	L315	Front_vehicle	562789	male
L193.B	Dash	560488	female	L319	Under_WCL_platform	561247	male
L194.A	Dash	562019	female	L350A.A	Rearaxlecmpt.	564552	male
L194.B	Dash	560488	female	L350A.B	Rearaxlecmpt.	563340	male
L195.A	Dash	560488	female	L350A.C	Rearaxlecmpt.	562251	male

CONNECTORS LIST

No	Location	Part #	Gender	No	Location	Part #	Gender
Mic_Driver_1.A	Parcel_rack	560999	male	Mo73	Enginecmpt.	568089	male
Mic_Driver_2.A	Parcel_rack	560999	male	PC1	FJB	562650	male
Mic_Driver_3.A	Parcel_rack	560999	male	PC1	FJB	562649	female
Mic_Guide_1.A	Parcel_rack	560999	male	PF	FJB	561782	male
Mic_Guide_2.A	Parcel_rack	560999	male	PF	FJB	561781	female
Mic_Guide_3.A	Parcel_rack	560999	male	PF1	Passenger_Area	561782	male
Mo3	Dash	561667	female	PF1	Passenger_Area	561781	female
Mo4	Dash	562076	male	Pot1.A	Dash	560488	female
Mo5	Upper_front	561550	male	Pot1.B	Dash	560488	female
Mo6	Front_vehicle	561690	male	Pot1.C	Dash	560488	female
Mo7	Cond_Cmpt	563691	male	PR	Parcelrack	561782	male
Mo8	Cond_Cmpt	563691	male	PR	Parcelrack	561781	female
Mo10	Parcel_rack	561515	male	PR1	Passenger_Area	561782	male
Mo11	Parcel_rack	561515	male	PR1	Passenger_Area	561781	female
Mo12	Engine_Cmpt	561690	male	R3	RJB	563409	male
Mo13	Engine_Cmpt	561690	female	R4	FJB	564496	male
Mo14	Engine_Cmpt	561566	female	R5	RJB	564496	male
Mo15	Front_Ceiling	560900	female	R12	Evap_Cmpt	563409	male
Mo16	Front_Ceiling	560900	female	R20	RJB	564496	male
Mo17	RH_Console	563626	male	R21	FJB	560525	male
Mo18	Fr_Service_Door	562474	male	R26	Evap_Cmpt	564496	male
Mo19	Fr_Service_Door	562474	male	R27	Dash	564496	male
Mo20	Fr_Service_Door	562474	male	R28	FJB	564496	male
Mo21	Upper_front	561186	male	R29	RJB	563409	male
Mo22	RH_Console	561186	male	R30	FJB	564496	male
Mo24	RH_Console	562348	female	R31	FJB	564496	male
Mo25	RH_Console	562348	female	R34	RJB	564210	male
Mo27	Cond_Cmpt	563691	male	R36	Dash	564496	male
Mo28	Cond_Cmpt	563691	male	R37	Dash	564496	male
Mo54	Service_Cmpt	562474	male	R38	FJB	564496	male
Mo61	Parcel_rack	561248	female	R40	RJB	564496	male
Mo65	Enginecmpt.	568089	male	R47	Parcelrack	564496	male
Mo67	Enginecmpt.	568089	male	R_12VISS	Parcel_rack	564496	male
Mo68	Enginecmpt.	568089	male	RadioVolvo1_933.A	Parcel_rack	563960	male
Mo69	Enginecmpt.	568089	male	RadioVolvo1_933.B	Parcel_rack	563962	male
Mo70	Enginecmpt.	568089	male	RadioVolvo1_933.C1	Parcel_rack	563956	male
Mo71	Enginecmpt.	568089	male	RadioVolvo1_933.C2	Parcel_rack	563957	male
Mo72	Enginecmpt.	568089	male	RadioVolvo1_933.C3	Parcel_rack	563958	male

CONNECTORS LIST

No	Location	Part #	Gender	No	Location	Part #	Gender
RadioVolvo2_933.A	Parcel_rack	563960	male	Se20	Evap_Cmpt	562426	male
RadioVolvo2_933.B	Parcel_rack	563962	male	Se21	Dash	561248	female
RadioVolvo2_933.C1	Parcel_rack	563956	male	Se23	Engine_Cmpt	563159	male
RadioVolvo2_933.C2	Parcel_rack	563957	male	Se24	Evap_Cmpt	563758	female
RadioVolvo2_933.C3	Parcel_rack	563958	male	Se25	Passenger_Area	561248	female
RadioVolvo3_933.A	Parcel_rack	563960	male	Se28	Pneumatic_plate	561690	male
RadioVolvo3_933.B	Parcel_rack	563962	male	Se29	Engine_Cmpt	561566	female
RadioVolvo3_933.C1	Parcel_rack	563956	male	Se30	Enginedoor	562877	female
RadioVolvo3_933.C2	Parcel_rack	563957	male	Se31	Enginedoor	562877	female
RadioVolvo3_933.C3	Parcel_rack	563958	male	Se32	Rear_Axle_Cmpt	562426	male
Res3.A	RJB	563590	female	Se33	Rear_Axle_Cmpt	562856	male
Res4	FJB	563590	female	Se34	Rear_Axle_Cmpt	562426	male
Res6	FJB	563590	female	Se35	Rear_Axle_Cmpt	562426	male
Res6A	FJB	563589	male	Se36	Rear_Axle_Cmpt	562427	male
Res6A	FJB	563590	female	Se37	Front_Axle_LH	641132	female
Res6B	FJB	563589	male	Se38	Front_Axle_RH	641132	female
Res6B	FJB	563590	female	Se39	Rear_Axle_LH	641132	female
Res7	dash	563590	female	Se40	Rear_Axle_LH	641132	female
Res15	Engine_Cmpt	561782	male	Se41	Condensor_cmpt.	562877	female
Res31	Ureacmpt.	562350	male	Se45	Servicecmpt.	563409	male
Res32	Ureacmpt.	563764	female	Se46	Rearaxlecmpt.	562348	female
Res53	dash	563590	female	Se49	Engine_Cmpt	561690	male
Res99	dash	563590	female	Se51	Driverseat	563589	male
Se2	Service_Cmpt	561566	female	Se53	Service_Cmpt	563159	female
Se4	Window_RH	561477	female	Se54	Service_Cmpt	563159	female
Se5	Window_RH	561477	female	Se55	Service_Cmpt	563159	female
Se6	Window_RH	561477	female	Se56	WCLdoor	562479	female
Se7	Window_LH	561477	female	Se60	Service_Cmpt	563409	male
Se8	Window_LH	561477	female	Se63	Rearaxlecmpt.	641132	female
Se9	Window_LH	561477	female	Se64	Rearaxlecmpt.	641132	female
Se10	FJB	561477	female	Se65	Dash	564042	female
Se11.A	Cond_Cmpt	560082	female	Se66	FJB	564039	female
Se11.B	Cond_Cmpt	560082	female	Se67	Frontaxlecmpt.	563159	female
Se11.C	Cond_Cmpt	560082	female	Se69	Frontaxlecmpt.	563159	female
Se13	Engine_Cmpt	562350	male	Se74	Rear_Axle_Cmpt	563340	male
Se14.A	Driver_Area	561782	male	Se79	Front_Axle	563340	male
Se14.B	Driver_Area	561781	female	Se94	WCLdoor	562877	female
Se15	RH_Console	560898	male	Se100	WCLdoor	562479	female
Se17	Entrace_Door	560081	female	shell1_1618	Driver_Area	562471	male
Se18	Servicecmpt.	561566	female	So3	RH_Console	641385	male
Se19_P	Service_Cmpt	563677	male	So4	RH_Console	641385	male
Se19_S	Service_Cmpt	563677	male	So5	RH_Console	641385	male

CONNECTORS LIST

No	Location	Part #	Gender	No	Location	Part #	Gender
So6	RH_Console	641385	male	Spk2_L	Parcel_Rack_LH	563994	male
So7	Service_Cmpt	561566	female	Spk2_R	Parcel_Rack_RH	563994	male
So8	Servicecmpt.	641385	male	Spk3_L	Parcel_Rack_LH	563994	male
So9	Enginecmpt.	560016	female	Spk3_R	Parcel_Rack_RH	563994	male
So10	Cond_Cmpt	562485	male	Spk4_L	Parcel_Rack_LH	563994	male
So11	Cond_Cmpt	561566	female	Spk4_R	Parcel_Rack_RH	563994	male
So13	Evap_Cmpt	563204	female	Spk5_L	Parcel_Rack_LH	563994	male
So14	Servicecmpt.	641385	male	Spk5_R	Parcel_Rack_RH	563994	male
So15	Servicecmpt.	641385	male	Spk6_L	Parcel_Rack_LH	563994	male
So16	Servicecmpt.	641385	male	Spk6_R	Parcel_Rack_RH	563994	male
So17	Servicecmpt.	562848	male	Spk7_L	Parcel_Rack_LH	563994	male
So18	Pneumatic_plate	641385	male	Spk7_R	Parcel_Rack_RH	563994	male
So19	Pneumatic_plate	641385	male	Spk8_L	Parcel_Rack_LH	563994	male
So20	Servicecmpt.	641385	male	Spk8_R	Parcel_Rack_RH	563994	male
So21	Front_Axle_Cmpt	564046	female	Spk9_L	Parcel_Rack_LH	563994	male
So22	Front_Axle_Cmpt	564046	female	Spk9_R	Parcel_Rack_RH	563994	male
So23	Rear_Axle_Cmpt	564046	female	Spk10_L	Parcel_Rack_LH	563994	male
So24	Rear_Axle_Cmpt	564046	female	Spk10_R	Parcel_Rack_RH	563994	male
So27	Rearaxlecmpt.	564045	female	Spk11_L	Parcel_Rack_LH	563994	male
So50	Rearaxlecmpt.	564046	female	Spk11_R	Parcel_Rack_RH	563994	male
So52	Rearaxlecmpt.	564045	female	Spk12_L	Parcel_Rack_LH	563994	male
So54	Enginecmpt.	564045	female	Spk12_R	Parcel_Rack_RH	563994	male
spBar4	Enginecmpt.	564135	male	Spk13_L	Parcel_Rack_LH	563994	male
spBar5	Enginecmpt.	564135	male	Spk13_R	Parcel_Rack_RH	563994	male
spBar6	Enginecmpt.	564135	male	Spk14_L	Parcel_Rack_LH	563994	male
spBar7	Enginecmpt.	564135	male	Spk14_R	Parcel_Rack_RH	563994	male
spBar11	Engine_Cmpt.	564135	male	Spk15_L	Parcel_Rack_LH	563994	male
spBar12	Engine_Cmpt.	564135	male	Spk15_R	Parcel_Rack_RH	563994	male
spBar13	Enginecmpt.	564135	male	Spk16_L	Parcel_Rack_LH	563994	male
spBar14	Enginecmpt.	564135	male	Spk16_R	Parcel_Rack_RH	563994	male
spBar15	Enginecmpt.	564135	male	SpkDr_L	Parcel_Rack_LH	563994	male
spBar16	Enginecmpt.	564135	male	SpkDr_R	Parcel_Rack_RH	563994	male
spBar19	Condensorcmpt.	564135	male	Sub1.A	Passenger_Area	564004	female
spBar20	Condensorcmpt.	564135	male	Sub2.A	Passenger_Area	564004	female
spBar21	Condensorcmpt.	564135	male	Sw1.C258	Driver_Area	561188	female
spBar22	Enginecmpt.	564135	male	Sw1.C259	Driver_Area	561186	male
spBar23	Enginecmpt.	564135	male	Sw2	Dash	562763	male
spBar24	Enginecmpt.	564135	male	Sw3	Dash	562763	male
Spk1_L	Parcel_Rack_LH	563994	male	Sw4	Dash	562763	male
Spk1_R	Parcel_Rack_RH	563994	male	Sw5	Dash	562763	male

CONNECTORS LIST

No	Location	Part #	Gender	No	Location	Part #	Gender
Sw6	Dash	562763	male	Sw51.A	1st_Lugg_Cmpt	562485	male
Sw10A	LH_Console	562763	male	Sw51.B	1st_Lugg_Cmpt	562486	female
Sw12	Dash	562763	male	Sw52.A	1st_Lugg_Cmpt	562485	male
Sw14	Dash	562763	male	Sw52.B	1st_Lugg_Cmpt	562486	female
Sw16	Dash	562763	male	Sw55.A	Lavatory	560488	female
Sw17	Dash	562763	male	Sw55.B	Lavatory	560488	female
Sw18A	LH_Console	562763	male	Sw56.A	Lavatory	560488	female
Sw20	Dash	562763	male	Sw56.B	Lavatory	560488	female
Sw21	Dash	562763	male	Sw58	Engine_Cmpt.	563135	male
Sw24	Dash	562763	male	Sw59	Enginecmpt.	563135	male
Sw25	Dash	562763	male	Sw63A	LHConsole	562763	male
Sw26	Dash	562763	male	Sw64.A	Service_Cmpt	560815	female
Sw27	Dash	562763	male	Sw64.B	Service_Cmpt	560815	female
Sw29	Dash	562763	male	Sw82	RJB	563135	male
Sw30	RJB	563135	male	Sw83.A	Dash	560082	female
Sw32	Dash	561477	female	Sw83.B	Dash	560815	female
Sw33	Dash	561476	male	Sw83.C	Dash	560082	female
Sw34	Outside_Front_RH	562477	male	Sw83.D	Dash	560815	female
Sw35	Console	562763	male	Sw85	LH_Console	562749	male
Sw38	LH_Console	562763	male	Sw95.A	WCLdoor	562615	female
Sw39.A	RJB	562403	female	Sw95.B	WCLdoor	562615	female
Sw39.B	RJB	562403	female	Sw95.C	WCLdoor	562615	female
Sw40	LH_Console	561690	male	Sw96.A	WCL_Door	562615	female
Sw41	LH_Console	562749	male	Sw96.B	WCL_Door	562615	female
Sw42	Lugg_Cmpt	561636	female	Sw96.C	WCLdoor	562615	female
Sw43	LH_Console	561690	male	Sw97.A	WCLsystem	562615	female
Sw44.A	FJB	562403	female	Sw97.B	WCLsystem	562615	female
Sw44.B	FJB	562403	female	Sw97.C	WCLsystem	562615	female
Sw45.A	5th_Lugg_Cmpt	562485	male	Sw98.A	WCLsystem	562615	female
Sw45.B	5th_Lugg_Cmpt	562486	female	Sw98.B	WCLsystem	562615	female
Sw46.A	5th_Lugg_Cmpt	562485	male	Sw98.C	WCLsystem	562615	female
Sw46.B	5th_Lugg_Cmpt	562486	female	Sw100	dash	562763	male
Sw47.A	3rd_Lugg_Cmpt	562485	male	Sw107	dash	562763	male
Sw47.B	3rd_Lugg_Cmpt	562486	female	Sw108	dash	562763	male
Sw48.A	3rd_Lugg_Cmpt	562485	male	Sw125.A	Service_Cmpt	561457	female
Sw48.B	3rd_Lugg_Cmpt	562486	female	Sw125.B	Service_Cmpt	561457	female
Sw49.A	2nd_Lugg_Cmpt	562485	male	Sw137	Dash	562763	male
Sw49.B	2nd_Lugg_Cmpt	562486	female	Sw156	LH_Console	562763	male
Sw50.A	2nd_Lugg_Cmpt	562485	male	Sw157	Dash	562763	male
Sw50.B	2nd_Lugg_Cmpt	562486	female	Sw158	Dash	562763	male

CONNECTORS LIST

No	Location	Part #	Gender	No	Location	Part #	Gender
Sw670	dash	562763	male				
sym812_291.A	Parcelrack	565180	female				
VECF1	FJB	563186	male				
VECF2	FJB	563183	male				
VECF3	FJB	563185	male				
VECF4	FJB	563182	male				
VECF9	FJB	563448	male				
VECF10	FJB	563181	male				
VECF11	FJB	563184	male				
VECF12	FJB	563187	male				
VECR1	RJB	563186	male				
VECR2	RJB	563183	male				
VECR3	RJB	563185	male				
VECR4	RJB	563182	male				
VECR9	RJB	563448	male				
VECR10	RJB	563181	male				
VECR11	RJB	563184	male				
VECR12	RJB	563187	male				
VECT3	Rear_vehicule	563718	male				
VECT4	Rear_vehicule	563714	male				
Y80	Engine_Cmpt	563789	male				
Y81	Cond_Cmpt	563793	male				

CONNECTORS LIST

No	Location	Part #	Gender	No	Location	Part #	Gender
24SS_OP	Parcel_Rack_LH	563071	male	A34.J	Enginecmpt.	568118	male
24SS_OP	Parcel_Rack_LH	563040	female	A34.K	Enginecmpt.	564270	male
24SS_OP_2	Parcel_Rack_LH	563071	male	A34.L	Enginecmpt.	564269	male
24SS_OP_2	Parcel_Rack_LH	563040	female	A36.JA	FJB	562767	male
120V_inlet	Rearvehicule	561572	male	A36.JB	FJB	562765	male
A1	RJB	563975	male	A36.JC	FJB	562957	male
A2	FJB	563984	male	A39.P101	Parcel_Rack_LH	563201	male
A3	Dash	562363	male	A39.P901	Parcel_Rack_LH	563953	male
A4.A	Service_Cmpt	562428	female	A41.J1	FJB	563679	male
A4.B	Service_Cmpt	561188	female	A41.J2	FJB	564037	male
A5	Service_Cmpt	562428	female	A41.J3	FJB	564004	male
A6	Engine_Cmpt	562427	male	A60.A	Parcel_Rack_LH	563071	male
A7	Rear_Axle_Cmpt	563979	male	A60.B	Parcel_Rack_LH	562706	female
A9.Cx1	FJB	564041	female	A60.C	Parcel_Rack_LH	901110	male
A9.Cx2	FJB	563678	male	A60.D	Parcel_Rack_LH	901110	male
A9.Cx3	FJB	564037	female	A61.A	Parcel_Rack_LH	562464	male
A9.Cx4	FJB	564038	female	A61.B	Parcel_Rack_LH	562465	male
A10.X1	Engine_Cmpt	563135	male	A65.A	Parcel_Rack_LH	563025	male
A10.X3	Engine_Cmpt	563134	female	A65.B4	Parcel_Rack_LH	bidon	male
A11	LH_Console	563142	male	A65.B5	Parcel_Rack_LH	bidon	male
A14.A	Dash	562766	male	A65.B6	Parcel_Rack_LH	bidon	male
A14.B	Dash	562767	male	A65.D	Parcel_Rack_LH	bidon	male
A14.C	Dash	562765	male	A65.E	Parcelrack	563071	male
A15	Dash	562464	male	A65.G1	Parcel_Rack_LH	563071	male
A17.D	RJB	561932	male	A65.G2	Parcel_Rack_LH	563071	male
A18.J1	FJB	562794	male	A65.G3	Parcel_Rack_LH	563071	male
A18.J2	FJB	562650	male	A65.H1	Parcel_Rack_LH	561716	female
A19	LH_Console	562878	female	A65.H2	Parcel_Rack_LH	561716	female
A20	Parcel_Rack_LH	561477	female	A65.H3	Parcel_Rack_LH	561716	female
A24.A	RH_Console	561890	male	A65.J	Parcel_Rack_LH	562465	male
A24.B	RH_Console	561566	female	A69L.A	Parcel_Rack_LH	563025	male
A24.C	RH_Console	561889	female	A69L.B1	Parcel_Rack_LH	bidon	male
A25	Parcel_Rack_LH	563025	male	A69L.B2	Parcel_Rack_LH	bidon	male
A26.P1	Enginecmpt.	562350	male	A69L.B3	Parcel_Rack_LH	bidon	male
A26.P2	Enginecmpt.	563322	female	A69L.B4	Parcel_Rack_LH	bidon	male
A26.P4	Enginecmpt.	568088	male	A69L.C	Parcel_Rack_LH	bidon	male
A27	Service_Cmpt	562929	male	A69R.A	Parcel_Rack_LH	563025	male
A28	Service_Cmpt	562928	male	A69R.B1	Parcel_Rack_LH	bidon	male
A29	Dash	562464	male	A69R.B2	Parcel_Rack_LH	bidon	male
A29.	Dash	562464	male	A69R.B3	Parcel_Rack_LH	bidon	male
A29.	Dash	565871	female	A69R.B4	Parcel_Rack_LH	bidon	male
A33.A	Parcel_Rack_LH	563071	male	A69R.C	Parcel_Rack_LH	bidon	male
A33.B	Parcel_Rack_LH	562330	female	A70c	Parcel_Rack_LH	561540	female

CONNECTORS LIST

No	Location	Part #	Gender	No	Location	Part #	Gender
A77	Parcelrack	564547	male	A120.C3	Dashboard	563958	male
A78	Parcelrack	562583	female	A121.Vsa	Dash	563679	male
A79	Parcelrack	562583	female	A121.Vsb	Dash	563678	male
A80	Parcelrack	562479	female	A121.Vsc	Dash	564037	male
A81.JA	FJB	562767	male	A121.Vsd	Dash	564118	male
A81.JB	FJB	562765	male	A130	Driver_Area	563226	male
A81.JC	FJB	562957	male	A131.A	Engine_Cmpt	561782	male
A83	Parcelrack	565970	female	A131.B	Engine_Cmpt	561781	female
A95.A	Parcelrack	564489	female	A137A	Condensercmpt.	20429843	male
A95.B	Parcelrack	562706	female	A138	Cond_Cmpt	563787	male
A95.C	Parcelrack	562706	female	A139	Dash	564501	male
A96.A	FJB	564205	male	A150	Parcelrack	21280133	male
A96S	FJB	564073	female	A152.A	Parcelrack	561550	male
A97	Dash	563226	male	A152.B	Parcelrack	563071	male
A97A	FJB	563226	male	A152.C	Parcelrack	563071	male
A97A	FJB	563613	female	A152.D	Parcelrack	563071	male
A97B	FJB	563226	male	A152.E	Parcelrack	563071	male
A97B	FJB	563613	female	A152.F	Parcelrack	563071	male
A97S.A1	Dash	564401	male	A152.G	Parcelrack	563071	male
A97S.A2	Dash	564402	male	A152.H	Parcelrack	563071	male
A97S.A3	Dash	564403	male	A152.I	Parcelrack	563071	male
A99	FJB	564205	male	A152.J	Parcelrack	563071	male
A100	Front_Axle_Cmpt	563758	female	A152.K	Parcelrack	562779	male
A100S	Front_Axle_Cmpt	563758	female	A152.L	Parcelrack	562779	male
A101	Rear_RH_Axle_Cmpt	563758	female	A162.A	FrontCab	561690	male
A101S	Rear_RH_Axle_Cmpt	563758	female	A162.B	FrontCab	561782	male
A102	Rear_RH_Axle_Cmpt	563758	female	A164.A	RH_trapezoidal_window	561690	male
A102S	Rear_RH_Axle_Cmpt	563758	female	A164.B	RH_trapezoidal_window	561782	male
A103	Dash	562070	female	A166	RearCab	561637	male
A107	EngineCmpt.	560336	male	A614.A	Parcelrack	561550	male
A108	RJB	562766	male	A614.C1	Parcelrack	563071	male
A109A	FJB	564141	male	A614.C2	Parcelrack	563071	male
A111	RJB	562550	female	A614.C3	Parcelrack	563071	male
A113.A	Parcel_Rack_LH	563960	male	A614.C4	Parcelrack	563071	male
A113.B	Parcel_Rack_LH	563962	male	A614.C5	Parcelrack	563071	male
A113.C1	Parcel_Rack_LH	563956	male	A614.C6	Parcelrack	563071	male
A113.C2	Parcel_Rack_LH	563957	male	A614.I/O	ParcelRack	bidon	male
A113.C3	Parcel_Rack_LH	563958	male	A614.P1	Parcelrack	562783	male
A114A	Dash	564252	male	A614.P2	Parcelrack	562783	male
A120.A	Dashboard	563960	male	A614.P3	Parcelrack	562783	male
A120.B	Dashboard	563962	male	AE41.J1	FJB	563679	male
A120.C1	Dashboard	563956	male	AE41.J2	FJB	564037	female
A120.C2	Dashboard	563957	male	AE41.J3	FJB	564004	male

CONNECTORS LIST

No	Location	Part #	Gender	No	Location	Part #	Gender
AE42.J1	FJB	563679	male	AE53.J2	LH_ParcelRack	564037	female
AE42.J2	FJB	564037	female	AE53.J3	LH_ParcelRack	565957	male
AE42.J3	FJB	564004	male	AE54.J1	Evaporatorcmpt.	563679	male
AE43.J1	FJB	563679	male	AE54.J2	Evaporatorcmpt.	564037	female
AE43.J2	FJB	564037	male	AE54.J3	Evaporatorcmpt.	565957	male
AE43.J3	FJB	565957	male	AE55.J1	Dash	563679	male
AE44.J1	FJB	563679	male	AE55.J2	Dash	564037	female
AE44.J2	FJB	564037	female	AE55.J3	Dash	564004	male
AE44.J3	FJB	565957	male	AE56.J1	Dash	563679	male
AE45.J1	FJB	563679	male	AE56.J2	Dash	564037	male
AE45.J2	FJB	564037	female	AE56.J3	Dash	564004	male
AE45.J3	FJB	565957	male	AE57.J1	WCLcmpt.	563679	male
AE46.J1	FJB	563679	male	AE57.J2	WCLcmpt.	564037	male
AE46.J2	FJB	564037	female	AE57.J3	WCLcmpt.	564004	male
AE46.J3	FJB	565957	male	AltLL.A	Enginecmpt.	563746	female
AE47.J1	RH_console	563679	male	AltLL.B	Enginecmpt.	560815	female
AE47.J2	RH_console	564037	female	AltLL.C	Enginecmpt.	564469	female
AE47.J3	RH_console	565957	male	AltLR.A	enginecmpt.	563746	female
AE48.J1	RH_console	563679	male	AltLR.B	Enginecmpt.	560815	female
AE48.J2	RH_console	564037	female	AltLR.C	Enginecmpt.	564469	female
AE48.J3	RH_console	565957	male	AltUR.A	Enginecmpt.	563746	female
AE49..J1	RJB	563679	male	AltUR.B	Enginecmpt.	560815	female
AE49..J2	RJB	564037	male	AltUR.C	Enginecmpt.	564469	female
AE49..J3	RJB	565957	male	B85	Engine_Cmpt	563815	male
AE49.J1	RJB	563679	male	B96	Engine_Cmpt	563821	male
AE49.J2	RJB	564037	male	B96B	Engine_Cmpt	563823	male
AE49.J3	RJB	565957	male	B97	Engine_Cmpt	563816	male
AE50..J1	RJB	563679	male	B98	Engine_Cmpt	563817	male
AE50..J2	RJB	564037	male	B99	Engine_Cmpt	563815	male
AE50..J3	RJB	565957	male	B115A	Enginecmpt.	564226	male
AE50.J1	RJB	563679	male	B142C	Condensercmpt.	563793	male
AE50.J2	RJB	564037	male	B310	Enginecmpt.	565967	male
AE50.J3	RJB	565957	male	C1	FJB	563589	male
AE51.J1	RJB	563679	male	C1	FJB	563590	female
AE51.J2	RJB	564037	female	C1S	FJB	563589	male
AE51.J3	RJB	565957	male	C1S	FJB	563590	female
AE52..J1	RJB	563679	male	C2	Service_Cmpt	563580	male
AE52..J2	RJB	564037	male	C2	Service_Cmpt	563581	female
AE52..J3	RJB	565957	male	C2A	FJB	563580	male
AE52.J1	RJB	563679	male	C2A	FJB	563581	female
AE52.J2	RJB	564037	female	C2B	FJB	564034	male
AE52.J3	RJB	565957	male	C2B	FJB	564035	female
AE53.J1	LH_ParcelRack	563679	male	C3_plug	RJB	563589	male

CONNECTORS LIST

No	Location	Part #	Gender	No	Location	Part #	Gender
C3_socket	RJB	563590	female	C20A	Evap_Cmpt	562485	male
C3AP	FJB	563589	male	C20A	Evap_Cmpt	562486	female
C3AP	FJB	563590	female	C20B	Evap_Cmpt	562485	male
C3AS	FJB	563589	male	C20B	Evap_Cmpt	562486	female
C3AS	FJB	563590	female	C23	Evaporatorcmpt.	564034	male
C3S	RJB	563593	male	C23	Evaporatorcmpt.	564035	female
C3S	RJB	563590	female	C24_plug	Evap_Cmpt	561690	male
C4	FJB	563580	male	C24_socket	Evap_Cmpt	561566	female
C4	FJB	563581	female	C25	Parcel_Rack_LH	561550	male
C5	FJB	563589	male	C25	Parcel_Rack_LH	561667	female
C5	FJB	563590	female	C26	Ureacmpt.	563226	male
C5S	FJB	563589	male	C26	Ureacmpt.	563613	female
C5S	FJB	563590	female	C26A	Ureacmpt.	568110	male
C6	FJB	563582	male	C26A	Ureacmpt.	568109	female
C6	FJB	563583	female	C26B	Ureacmpt.	563227	male
C7	Service_Cmpt	562581	male	C26B	Ureacmpt.	563614	female
C7	Service_Cmpt	562583	female	C29	4rd_Lugg_Cmpt	563651	male
C8	FJB	563227	male	C29	3rd_Lugg_Cmpt	563652	female
C8	FJB	563614	female	C30	3rd_Lugg_Cmpt	561710	male
C9	RJB	561986	male	C30	3rd_Lugg_Cmpt	561709	female
C9	RJB	561987	female	C31W	Parcelrack	563227	male
C10	Engine_Cmpt	562581	male	C31W	Parcelrack	563614	female
C10	Engine_Cmpt	562583	female	C32	lavatory	561734	male
C11	Service_Cmpt	563580	male	C32	Lavatory	561735	female
C11	Service_Cmpt	563581	female	C32W	WCLcmpt.	561669	male
C12	Engine_Cmpt	562581	male	C32W	WCLcmpt.	561670	female
C12	Engine_Cmpt	562583	female	C33	WCLcmpt.	564034	male
C13_plug	RH_Console	563589	male	C33	WCLcmpt.	564035	female
C13_socket	RH_Console	563590	female	C34	RH_Console	561986	male
C13S	RH_Console	563589	male	C34	RH_Console	561987	female
C13S	RH_Console	563590	female	C36	FJB	561986	male
C14	WCLsystem	561550	male	C36	FJB	561987	female
C14	WCLsystem	561667	female	C37	Parcel_Rack_LH	562557	male
C15A	Evapotatorcmpt.	568110	male	C37	Parcel_Rack_LH	562558	female
C15A	Evaporatotcmpt.	568109	female	C37.	Parcel_Rack_LH	561734	male
C16	RJB	561577	male	C37.	Parcel_Rack_LH	561735	female
C16	RJB	561605	female	C38	Parcelrack	562555	male
C17	RJB	560195	male	C38	Parcelrack	562556	female
C17	RJB	560169	female	C38.	Parcelrack	561734	male
C18	FJB	561986	male	C38.	Parcelrack	561735	female
C18	FJB	561987	female	C39	Parcelrack	562503	male
C19	RJB	561986	male	C39	Parcelrack	562507	female
C19	RJB	561987	female	C39A	Firesuppressioncmpt.	561782	male

CONNECTORS LIST

No	Location	Part #	Gender	No	Location	Part #	Gender
C39A	Firesuppressioncmpt.	561781	female	C72	FJB	561646	male
C40	Dash	562485	male	C72	FJB	561645	female
C40	Dash	562486	female	C74	FJB	561645	female
C41	RJB	561782	male	C74	FJB	561646	male
C41	RJB	561781	female	C87	Engine_Cmpt	562485	male
C44_plug	FJB	561577	male	C87	Engine_Cmpt	562486	female
C44_socket	FJB	561605	female	C88	WCL_Cmpt.	563226	male
C45	FJB	561643	male	C88	WCL_Cmpt.	563613	female
C45	FJB	561642	female	C90	RJB	563582	male
C46	3rdlugg.cmpt.	562549	male	C90	RJB	563583	female
C46	3rdlugg.cmpt.	562550	female	C91	RJB	562285	male
C47	FJB	565207	male	C91	RJB	562282	female
C48	RJB	565208	male	C94_plug	FJB	563589	male
C49	FJB	562005	male	C94_socket	FJB	563590	female
C49	FJB	561714	female	C96	FJB	561646	male
C50	RJB	568110	male	C96	FJB	561645	female
C50	RJB	568109	female	C97	FJB	561643	male
C54	Engine_Cmpt.	563226	male	C97	FJB	561642	female
C54	Engine_Cmpt.	563613	female	C99	Enginecmpt.	562581	male
C54A	Ureacmpt.	568110	male	C99	Enginecmpt.	562583	female
C54A	Ureacmpt.	568109	female	C100	Evaporatorcmpt.	562477	male
C54B	Engine_Cmpt.	562477	male	C100	Evaporatorcmpt.	562479	female
C54B	Engine_Cmpt.	562479	female	C100S	Evaporator_Cmpt.	562477	male
C55	Evap_Cmpt	561577	male	C100S	Evaporator_Cmpt.	562479	female
C55	Evap_Cmpt	561605	female	C101	Service_Cmpt	561690	male
C59	RJB	561643	male	C101	Service_Cmpt	561566	female
C59	RJB	561642	female	C103_plug	FJB	562485	male
C63	Entrace_Door	562581	male	C103_socket	FJB	562486	female
C63	Entrace_Door	562583	female	C105_plug	FJB	562581	male
C64	Enginecmpt.	568110	male	C105_socket	FJB	562583	female
C64	Enginecmpt.	568109	female	C106_plug	FJB	562581	male
C64X	Aisle_section	560898	male	C106_socket	FJB	562583	female
C64X	Aisle_section	560900	female	C107A	Enginecmpt.	562885	female
C66_plug	Evap_Cmpt	561577	male	C107A	Enginecmpt.	562884	female
C66_socket	Evap_Cmpt	561605	female	C107B	Enginecmpt.	562885	female
C67	Parcelrack	561734	male	C107B	Enginecmpt.	562884	female
C67	Parcelrack	561735	female	C107C	Enginecmpt.	562885	female
C69_plug	FJB	561690	male	C107C	Enginecmpt.	562884	female
C69_socket	FJB	561566	female	C108	Dash	562557	male
C70	FJB	562557	male	C108	dash	562558	female
C70	FJB	562558	female	C110	Dash	568110	male
C71	FJB	561646	male	C110	Dash	568109	female
C71	FJB	561645	female	C119A	Rear_engine_door	568110	male

CONNECTORS LIST

No	Location	Part #	Gender	No	Location	Part #	Gender
C119A	Rear_engine_door	568109	female	C213	Parcel_Rack_LH	561515	male
C124	DashBoard	562503	male	C213	Parcel_Rack_LH	561552	female
C124	DashBoard	562507	female	C222	FJB	562477	male
C131A	Engine_Cmpt	561782	male	C222	FJB	562479	female
C131A	Engine_Cmpt	561781	female	C223	FJB	563227	male
C131B	Engine_Cmpt	561782	male	C223	FJB	563614	female
C131B	Engine_Cmpt	561781	female	C224	FJB	561637	male
C144	RJB	560852	male	C224	FJB	561636	female
C144	RJB	560851	female	C225	FJB	562650	male
C152	Cond_Cmpt	561611	male	C225	FJB	562649	female
C152	Cond_Cmpt	561610	female	C226	FJB	562650	male
C162	FrontCab	561690	male	C226	FJB	562649	female
C162	FrontCab	561566	female	C226a_plug	FJB	562650	male
C164A	RH_Trapezoidal_Window	561690	male	C226a_socket	FJB	562649	female
C164A	RH_Trapezoidal_Window	561566	female	C266	Parcelrack	561782	male
C164B	RH_Trapezoidal_Window	561782	male	C266	Parcelrack	561781	female
C164B	RH_Trapezoidal_Window	561781	female	C267	Parcelrack	561782	male
C167	FJB	561577	male	C267	Parcelrack	561781	female
C167	FJB	561605	female	C279	Service_Cmpt	562477	male
C170	LH_Console	561637	male	C279	Service_Cmpt	562479	female
C170	LH_Console	561636	female	C279A	Service_Cmpt	562477	male
C171	LH_Console	561646	male	C279A	Service_Cmpt	562479	female
C171	LH_Console	561645	female	C284	Parcel_Rack	561782	male
C175	RJB	563226	male	C284	Parcel_Rack	561781	female
C175	RJB	563613	female	C284_1	Parcel_Rack	561782	male
C175.	RJB	563226	male	C284_1	Parcel_Rack	561781	female
C175.	RJB	563613	female	C284_2	Parcel_Rack	561782	male
C187	RJB	561577	male	C284_2	Parcel_Rack	561781	female
C187	RJB	561605	female	C284_3	Parcel_Rack	561782	male
C188	Evap_Cmpt	561577	male	C284_3	Parcel_Rack	561781	female
C188	Evap_Cmpt	561605	female	C284_4	Parcel_Rack	561782	male
C189	RJB	561986	male	C284_4	Parcel_Rack	561781	female
C189	RJB	561987	female	C284_5	Parcel_Rack	561782	male
C193_plug	RJB	563589	male	C284_5	Parcel_Rack	561781	female
C193_socket	RJB	563590	female	C284_6	Parcel_Rack	561782	male
C194	FJB	563589	male	C284_6	Parcel_Rack	561781	female
C194	FJB	563590	female	C298	Parcelrack	561782	male
C195	dash	563347	male	C298	Parcelrack	561781	female
C195	dash	560489	female	C333	Upper_front	561550	male
C206	Parcel_Rack_RH	562503	male	C333	Upper_front	561667	female
C206	Parcel_Rack_RH	562507	female	C355	RJB	563582	male
C207	Parcel_Rack_LH	562503	male	C355	RJB	565887	female
C207	Parcel_Rack_LH	562507	female	C356	Parcelrack	561710	male

CONNECTORS LIST

No	Location	Part #	Gender	No	Location	Part #	Gender
C356	Parcelrack	561709	female	C575	Parcel_Rack_RH	562503	male
C356A	Parcelrack	561515	male	C575	Parcel_Rack_RH	562507	female
C356A	Parcelrack	561552	female	C576B	Parcel_Rack_RH	562006	male
C357	Parcelrack	561847	male	C576B	Parcel_Rack_RH	560908	female
C357	Parcelrack	561862	female	C576BB	Parcelrack	562006	male
C380A	Dash	564222	male	C576BB	Parcelrack	560908	female
C380A	Dash	564224	female	C577A	Parcel_Rack	562006	male
C381	Parcel_Rack	561847	male	C577A	Parcel_Rack	560908	female
C381	Parcel_Rack	561862	female	C577AA	Parcelrack	562006	male
C382	Under_Seat	561580	male	C577AA	Parcelrack	560908	female
C382	Under_Seat	561582	female	C578	Parcel_Rack_LH	562503	male
C397	RJB	562285	male	C578	Parcel_Rack_LH	562507	female
C397	RJB	562282	female	C582	FJB	561690	female
C397.	RJB	562285	male	C582	FJB	561566	female
C397.	RJB	562282	female	C600	Dash	563226	male
C430	LH_Console	562363	male	C600	Dash	563613	female
C430	LH_Console	561188	female	C600A	Dash	563226	male
C452	Dash	561669	male	C600A	Dash	563613	female
C452	Dash	561670	female	C600B	Dash	563226	male
C463	Rearaxlecmpt.	568111	male	C600B	Dash	563613	female
C463	Rearaxlecmpt.	568112	female	C601	LHRoofWinAjar	561476	male
C464	FJB	564222	male	C601	LHRoofWinAjar	561477	female
C464	FJB	564224	female	C602	RH_Roof_Win_Ajar	561476	male
C464A	Dash	564222	male	C602	RH_Roof_Win_Ajar	561477	female
C464A	Dash	564224	female	C603	RHRoofWinAjar	561476	male
C464B	FJB	564222	male	C603	RHRoofWinAjar	561477	female
C464B	FJB	564224	female	C614	Passenger_Area	563071	male
C465	Parcelrack	562581	male	C614	Passenger_Area	563040	female
C465	Parcelrack	562583	female	C615	Passenger_Area	563071	male
C506	FJB	561687	male	C615	Passenger_Area	563040	female
C506	FJB	561685	female	C617	Mirror_LH	563801	male
C542	Parcelrack	561550	male	C617	Mirror_LH	563800	female
C542	Parcelrack	561667	female	C618	Mirror_RH	563801	male
C558	Parcelrack	562503	male	C618	Mirror_RH	563800	female
C558	Parcelrack	562507	female	C621	Aisle_section	560898	male
C564	Parcelrack	562503	male	C621	Aisle_section	560900	female
C564	Parcelrack	562507	female	C624_plug	Rear_Galley	561690	male
C564_Sp	Parcelrack	562503	male	C624_socket	Rear_Galley	561566	female
C564_Sp	Parcelrack	562507	female	C626	FJB	562485	male
C566	Parcelrack	562503	male	C626	FJB	562486	female
C566	Parcelrack	562507	female	C629	DashBoard	561690	male
C567	Parcelrack	562503	male	C629	DashBoard	561566	female
C567	Parcelrack	562507	female	C630	Parcel_Rack	561690	male

CONNECTORS LIST

No	Location	Part #	Gender	No	Location	Part #	Gender
C630	Parcel_Rack	561566	female	C_Audio_HDMI_R	Parcel_Rack	901283	female
C633	Aisle_section	560898	male	C_AUX	Parcelrack	563071	male
C633	Aisle_section	560900	female	C_AUX	Parcelrack	563040	female
C634	Aisle_section	560898	male	C_AUX_2	Parcelrack	563071	male
C634	Aisle_section	560900	female	C_AUX_2	Parcelrack	563040	female
C636	Aisle_section	560898	male	C_INV1	Parcelrack	562337	male
C636	Aisle_section	560900	female	C_INV1	Parcelrack	562338	male
C645	Aisle_section	560898	male	C_INV2	Parcelrack	562337	male
C645	Aisle_section	560900	female	C_INV2	Parcelrack	562338	male
C660	Rear_Galley	562646	male	C_LineOut	Parcelrack	563962	male
C660	Rear_Galley	562647	female	C_LineOut	Parcelrack	564489	female
C662	FJB	562477	male	C_Mo9	Evap_Cmpt	561577	male
C662	FJB	562479	female	C_Mo9	Evap_Cmpt	561605	female
C700	FJB	561637	male	C_Mo9:2	Evap_Cmpt	561577	male
C700	FJB	561636	female	C_Mo9:2	Evap_Cmpt	561605	female
C710	Front_LH_ParcelRack	561637	male	C_Se51	dash	563589	male
C710	Front_LH_ParcelRack	561636	female	C_Se51	dash	563590	female
C752_plug	Parcel_Rack	901062	male	C_USB	Parcel_Rack	562069	male
C752_socket	Parcel_Rack	901283	female	C_USB	Parcel_Rack	562070	female
C753_plug	Parcel_Rack	901062	male	CCAN1	FJB	562650	male
C753_socket	Parcel_Rack	901283	female	CCAN1	FJB	562649	female
C766	Parcelrack	561662	male	CCAN2	FJB	562650	male
C766	Parcelrack	561661	female	CCAN2	FJB	562649	female
C768	Parcel_Rack	901062	male	CCAN3	FJB	562650	male
C768	Parcel_Rack	901283	female	CCAN3	FJB	562649	female
C769	Parcel_Rack	901062	male	CCAN4	FJB	562650	male
C769	Parcel_Rack	901283	female	CCAN4	FJB	562649	female
C777	Dash	562477	male	CCust	RJB	562477	male
C777	Dash	562479	female	CCust	RJB	562479	female
C_A60DB	Parcel_Rack	563071	male	CCust.	RJB	562477	male
C_A60DB	Parcel_Rack	563040	female	CCust.	RJB	562479	female
C_A69R	Parcel_Rack	563025	male	CFHPR1	Parcelrack	564560	male
C_A97	Dash	563226	male	CIND-1.A	Parcelrack	560908	female
C_A97	Dash	563613	female	CIND-1.B	Parcelrack	560908	female
C_ALT	Enginecmpt.	562581	male	CIND-2.A	Parcelrack	560908	female
C_ALT	Enginecmpt.	562583	female	CIND-2.B	Parcelrack	560908	female
C_ALT3	Enginecmpt.	562477	male	CIND-11.A	Parcelrack	560908	female
C_ALT3	Enginecmpt.	562479	female	CIND-11.B	Parcelrack	560908	female
C_AUDIO_AUX	Parcel_Rack	562557	male	CINDWC-1.A	Parcelrack	560908	female
C_AUDIO_AUX	Parcel_Rack	562558	female	CINDWC-1.B	Parcelrack	560908	female
C_Audio_HDMI_L	Parcel_Rack	901062	male	CL1	FJB	562485	male
C_Audio_HDMI_L	Parcel_Rack	901283	female	CL1	FJB	562486	female
C_Audio_HDMI_R	Parcel_Rack	901062	male	CL58A	Aisle_Section	560898	male

CONNECTORS LIST

No	Location	Part #	Gender	No	Location	Part #	Gender
CL58A	Aisle_Section	560900	female	L29	Parcelrack	560898	male
CP1	Passenger_Area	561782	male	L30	Parcelrack	560898	male
CP1	Passenger_Area	561781	female	L30A.A	Parcelrack	560898	male
CP2	Passenger_Area	561782	male	L30B.A	Parcelrack	560898	male
CP2	Passenger_Area	561781	female	L31	Parcelrack	560898	male
CP3	Passengersarea	561782	male	L32	Parcelrack	560898	male
CP3	Passengersarea	561781	female	L33	Parcelrack	560898	male
CP4	Passenger_Area	561782	male	L34	Parcelrack	560898	male
CP4	Passenger_Area	561781	female	L35	Parcelrack	560898	male
CP5	Passenger_Area	561782	male	L36	Parcelrack	560898	male
CP5	Passenger_Area	561781	female	L37	Parcelrack	560898	male
CPA17B	RJB	562337	male	L38	Parcelrack	560898	male
CPA17B	RJB	562338	female	L39	Parcelrack	560898	male
CSo53	Rear_axle_cmpt.	561690	male	L40	Parcelrack	560898	male
CSo53	Rear_axle_cmpt.	561566	female	L41	Parcelrack	560898	male
CSw102	Rear_vehicule	562549	male	L42	Parcelrack	560898	male
CSw102	Rear_vehicule	562550	female	L43	Parcelrack	560898	male
CSX1	Engine_Cmpt	563135	male	L44	Parcelrack	560898	male
CSX1	Engine_Cmpt	563134	female	L45	Parcelrack	560898	male
CSX3	Engine_Cmpt	563135	male	L46	Parcelrack	560898	male
CSX3	Engine_Cmpt	563134	female	L47	Parcelrack	560898	male
CT_IN	Rear_Vehicle	560167	male	L48	Parcelrack	560898	male
CT_IN	Rear_Vehicle	560159	female	L49	Parcelrack	560898	male
CT_IN2	Engine_Cmpt	560167	male	L50	Parcelrack	560898	male
CT_IN2	Engine_Cmpt	560159	female	L51	Parcelrack	560898	male
CT_Out	Rear_Vehicle	560233	female	L52	Parcelrack	560898	male
EI	Enginecmpt.	563739	male	L52	Parcelrack	560900	female
L1A	Engine_Cmpt	560774	male	L52A	Parcelrack	560898	male
L16.A	Frontroof	562615	female	L53	Parcelrack	560898	male
L16.B	Frontroof	562615	female	L53	Parcelrack	560900	female
L17.A	Frontroof	562615	female	L53A	Parcelrack	560898	male
L17.B	Frontroof	562615	female	L54	Parcelrack	560898	male
L18	Entrance_Door	562549	male	L54	Parcelrack	560900	female
L19	Entracedoor	562486	female	L54A	Parcelrack	560898	male
L20	Entracedoorstep	562486	female	L55	Parcelrack	560898	male
L21	Upper_front	562486	female	L55	Parcelrack	560900	female
L22	Upper_front	562486	female	L55A	Parcelrack	560898	male
L23	Upper_front	562486	female	L56	Parcelrack	560898	male
L24	Upper_front	562486	female	L56	Parcelrack	560900	female
L25	Upper_front	562486	female	L56A	Parcelrack	560898	male
L26	Upper_front	562486	female	L57	Parcelrack	560898	male
L27	Upper_front	562486	female	L57	Parcelrack	560900	female
L28	Parcelrack	560898	male	L57A	Parcelrack	560898	male

CONNECTORS LIST

No	Location	Part #	Gender	No	Location	Part #	Gender
L58	Parcelrack	560898	male	L144	Parcelrack	561186	male
L58	Parcelrack	560900	female	L145	Parcelrack	561186	male
L58A	Parcelrack	560898	male	L146	Parcelrack	561186	male
L63	Front_Side_LH	562155	male	L147	Parcelrack	561186	male
L64	Outside_Front_RH	562155	male	L148	Parcelrack	561186	male
L64X	Aisle_Section	560898	male	L149	Parcelrack	561186	male
L65	Outside_Front_LH	562155	male	L150	Parcelrack	561186	male
L66	Out_Side_Front_LH	562155	male	L151	Parcelrack	561186	male
L67	4th_Lugg_Cmpt	562155	male	L152	Parcelrack	561186	male
L68	4th_Lugg_Cmpt	562155	male	L153	Parcelrack	561186	male
L69	4th_Lugg_Cmpt	562155	male	L154	Parcelrack	561186	male
L70	4th_Lugg_Cmpt	562155	male	L155	Parcelrack	561186	male
L72	Rear_Vehicle	562155	male	L156	Parcelrack	561186	male
L74	Rear_Vehicle	562155	male	L157	Parcelrack	561186	male
L75	Rearenginedoor	562155	male	L158	Parcelrack	561186	male
L76	Rear_engine_door	562155	male	L173	Parcelrack	563590	female
L81.A	Rear_Vehicle	562835	female	L174A	Parcelrack	563590	female
L81.B	Rear_Vehicle	562834	male	L175	Engine_Cmpt.	563590	female
L82A	Rearvehicule	562348	female	L176	5th_Lugg_Cmpt	561247	male
L83A	Rearvehicule	562348	female	L177	5th_Lugg_Cmpt	561247	male
L84	Rear_roof	562486	female	L178	3rd_Lugg_Cmpt	561247	male
L85	Rear_roof	562486	female	L179	3rd_Lugg_Cmpt	561247	male
L86	Rear_roof	562486	female	L180	2nd_Lugg_Cmpt	561247	male
L87	Rear_roof	562486	female	L181	2nd_Lugg_Cmpt	561247	male
L88	Rear_roof	562486	female	L182	1st_Lugg_Cmpt	561247	male
L89	Rear_roof	562486	female	L183	1st_Lugg_Cmpt	561247	male
L90	Rear_roof	562486	female	L184	Servicecmpt.	561247	male
L93.A	Engine_Cmpt.	563069	female	L185.A	Servicecmpt.	561539	male
L93.B	Engine_Cmpt.	563069	female	L185.B	Servicecmpt.	561539	male
L94.A	Engine_Cmpt.	563069	female	L186.A	Dash	561539	male
L94.B	Engine_Cmpt.	563069	female	L186.B	Dash	561539	male
L95	Outside_Front_LH	562485	male	L187	Engine_Cmpt	561690	male
L95A	Outside_Front_LH	562485	male	L188	Service_Cmpt	562486	female
L96	Outside_Front_RH	562485	male	L193.A	Dash	560488	female
L96A	Outside_Front_RH	562485	male	L193.B	Dash	560488	female
L97.A	Outside_Front_LH	563069	female	L194.A	Dash	562019	female
L97.B	Outside_Front_LH	563069	female	L194.B	Dash	560488	female
L98.A	Entrance_Door	563069	female	L195.A	Dash	560488	female
L98.B	Outside_Front_RH	563069	female	L195.B	Dash	560488	female
L140	Lavatory	561247	male	L199	Enginecmpt.	562848	male
L141	Upper_front	561247	male	L201	Upper_front	561247	male
L142	Lavatory	562006	male	L202	Upper_front	561247	male
L143	Parcel_rack	561186	male	L203	RH_Console	561690	male

CONNECTORS LIST

No	Location	Part #	Gender	No	Location	Part #	Gender
L204	Parcel_Rack_RH	562803	male	L604	Luggage_Cmpt	562155	male
L205	Enginecmpt.	562485	male	L605	Luggage_Cmpt	562155	male
L206	Parcel_Rack_RH	562803	male	L606	Luggage_Cmpt	562155	male
L211	Entrace_Door_step	562486	female	L607	Luggage_Cmpt	562155	male
L243	Parcelrack	561186	male	L634	Aisle_Section	560898	male
L244	Parcelrack	561186	male	L635	Aisle_Section	560898	male
L245	Parcelrack	561186	male	L650.A	Aisle_Section	560898	male
L246	Parcelrack	561186	male	L660_1	Rear_Galley	560898	male
L247	Parcel_rack	561186	male	L660_2.A	Rear_Galley	560898	male
L248	Parcelrack	561186	male	L660_3.A	Rear_Galley	560898	male
L249	Parcelrack	561186	male	L661.A	Rear_Galley	560081	female
L250	Parcel_rack	561186	male	L661.B	Rear_Galley	560081	female
L251	Parcel_rack	561186	male	Mic_Driver_1.A	Parcel_rack	560999	male
L252	Parcelrack	561186	male	Mic_Driver_2.A	Parcel_rack	560999	male
L253	Parcel_rack	561186	male	Mic_Driver_3.A	Parcel_rack	560999	male
L254	Parcelrack	561186	male	Mic_Guide_1.A	Parcel_rack	560999	male
L255	Parcel_rack	561186	male	Mic_Guide_2.A	Parcel_rack	560999	male
L256	Parcelrack	561186	male	Mic_Guide_3.A	Parcel_rack	560999	male
L257	Parcelrack	561186	male	Mo3	Dash	561667	female
L258	Parcel_rack	561186	male	Mo4	Dash	562076	male
L282	Engine_Cmpt	561690	male	Mo5	Upper_front	561550	male
L285.A	Rear_Vehicle	562835	female	Mo6	Front_vehicle	561690	male
L285.B	Rear_Vehicle	562834	male	Mo7	Cond_Cmpt	563691	male
L286.A	Rear_Vehicle	562835	female	Mo8	Cond_Cmpt	563691	male
L286.B	Rear_Vehicle	562834	male	Mo10	Parcel_rack	561515	male
L290	Engine_door	562565	female	Mo11	Parcel_rack	561515	male
L291	Engine_door	562565	female	Mo12	Engine_Cmpt	561690	male
L298A	Enginecmpt.	563590	female	Mo13	Engine_Cmpt	561690	female
L306	RJBcmpt.	561247	male	Mo14	Engine_Cmpt	561566	female
L309.	Rear_LH_Lugg	564576	male	Mo15	Front_Ceiling	560900	female
L309D.	Drivers_Area	564576	male	Mo16	Front_Ceiling	560900	female
L310.	Rear_LH_Lugg	564576	male	Mo17	RH_Console	563626	male
L310D.	Drivers_Area	564576	male	Mo18	Fr_Service_Door	562474	male
L314	Front_vehicle	562789	male	Mo19	Fr_Service_Door	562474	male
L315	Front_vehicle	562789	male	Mo20	Fr_Service_Door	562474	male
L319	Under_WCL_platform	561247	male	Mo21	Upper_front	561186	male
L350A.A	Rearaxlecmpt.	564552	male	Mo22	RH_Console	561186	male
L350A.B	Rearaxlecmpt.	563340	male	Mo24	RH_Console	562348	female
L350A.C	Rearaxlecmpt.	562251	male	Mo25	RH_Console	562348	female
L600	Luggage_Cmpt	562155	male	Mo27	Cond_Cmpt	563691	male
L601	Luggage_Cmpt	562155	male	Mo28	Cond_Cmpt	563691	male
L602	Luggage_Cmpt	562155	male	Mo54	Service_Cmpt	562474	male
L603	Luggage_Cmpt	562155	male	Mo61	Parcel_rack	561248	female

CONNECTORS LIST

No	Location	Part #	Gender	No	Location	Part #	Gender
Mo62	FrontHatch	562486	female	R37	Dash	564496	male
Mo63	RearHatch	562486	female	R38	FJB	564496	male
Mo65	Enginecmpt.	568089	male	R40	RJB	564496	male
Mo67	Enginecmpt.	568089	male	R47	Parcelrack	564496	male
Mo68	Enginecmpt.	568089	male	R72	5th_Bay	563409	male
Mo69	Enginecmpt.	568089	male	R73	5th_Bay	563409	male
Mo70	Enginecmpt.	568089	male	R_12VISS	Parcel_rack	564496	male
Mo71	Enginecmpt.	568089	male	RadioVolvo1_933.A	Parcel_rack	563960	male
Mo72	Enginecmpt.	568089	male	RadioVolvo1_933.B	Parcel_rack	563962	male
Mo73	Enginecmpt.	568089	male	RadioVolvo1_933.C1	Parcel_rack	563956	male
PC1	FJB	562650	male	RadioVolvo1_933.C2	Parcel_rack	563957	male
PC1	FJB	562649	female	RadioVolvo1_933.C3	Parcel_rack	563958	male
PF	FJB	561782	male	RadioVolvo2_933.A	Parcel_rack	563960	male
PF	FJB	561781	female	RadioVolvo2_933.B	Parcel_rack	563962	male
PF1	Passenger_Area	561782	male	RadioVolvo2_933.C1	Parcel_rack	563956	male
PF1	Passenger_Area	561781	female	RadioVolvo2_933.C2	Parcel_rack	563957	male
PF1A	Passenger_Area	561782	male	RadioVolvo2_933.C3	Parcel_rack	563958	male
PF1A	Passenger_Area	561781	female	RadioVolvo3_933.A	Parcel_rack	563960	male
Pot1.A	Dash	560488	female	RadioVolvo3_933.B	Parcel_rack	563962	male
Pot1.B	Dash	560488	female	RadioVolvo3_933.C1	Parcel_rack	563956	male
Pot1.C	Dash	560488	female	RadioVolvo3_933.C2	Parcel_rack	563957	male
Pot2	Dash	561550	male	RadioVolvo3_933.C3	Parcel_rack	563958	male
PR	Parcelrack	561782	male	Res3.A	ParcelRack	563590	female
PR	Parcelrack	561781	female	Res4	RH_Console	563590	female
PR1	Passenger_Area	561782	male	Res6	FJB	563590	female
PR1	Passenger_Area	561781	female	Res6A	FJB	563589	male
PR1A	Passenger_Area	561782	male	Res6A	FJB	563590	female
PR1A	Passenger_Area	561781	female	Res6B	FJB	563589	male
R3	RJB	563409	male	Res6B	FJB	563590	female
R4	FJB	564496	male	Res7	dash	563590	female
R5	RJB	564496	male	Res15	Engine_Cmpt	561782	male
R12	Evap_Cmpt	563409	male	Res31	Ureacmpt.	562350	male
R20	RJB	564496	male	Res32	Ureacmpt.	563764	female
R21	FJB	560525	male	Res46	FJB	563590	female
R23A	FJB	564496	male	Res47	FJB	563590	female
R26	Evap_Cmpt	564496	male	Res53	dash	563590	female
R27	Dash	564496	male	Res99	dash	563590	female
R28	FJB	564496	male	Se2	Service_Cmpt	561566	female
R29	RJB	563409	male	Se4	Window_RH	561477	female
R30	FJB	564496	male	Se5	Window_RH	561477	female
R31	FJB	564496	male	Se6	Window_RH	561477	female
R34	RJB	564210	male	Se7	Window_LH	561477	female
R36	Dash	564496	male	Se8	Window_LH	561477	female

CONNECTORS LIST

No	Location	Part #	Gender	No	Location	Part #	Gender
Se9	Window_LH	561477	female	Se65	Dash	564042	female
Se10	FJB	561477	female	Se66	FJB	564039	female
Se11.A	Cond_Cmpt	560082	female	Se67	Frontaxlecmpt.	563159	female
Se11.B	Cond_Cmpt	560082	female	Se69	Frontaxlecmpt.	563159	female
Se11.C	Cond_Cmpt	560082	female	Se74	Rear_Axle_Cmpt	563340	male
Se13	Engine_Cmpt	562350	male	Se79	Front_Axle	563340	male
Se14.A	Driver_Area	561782	male	Se89	EngineCmpt	562350	male
Se14.B	Driver_Area	561781	female	Se94	WCLdoor	562877	female
Se15	RH_Console	560898	male	Se100	WCLdoor	562479	female
Se17	Entrace_Door	560081	female	shell1_1618	Driver_Area	562471	male
Se18	Servicecmpt.	561566	female	So3	RH_Console	641385	male
Se19_P	Service_Cmpt	563677	male	So4	RH_Console	641385	male
Se19_S	Service_Cmpt	563677	male	So5	RH_Console	641385	male
Se20	Evap_Cmpt	562426	male	So6	RH_Console	641385	male
Se21	Dash	561248	female	So7	Service_Cmpt	561566	female
Se23	Engine_Cmpt	563159	male	So8	Servicecmpt.	641385	male
Se24	Evap_Cmpt	563758	female	So9	Enginecmpt.	560016	female
Se25	Passenger_Area	561248	female	So10	Cond_Cmpt	562485	male
Se28	Pneumatic_plate	561690	male	So11	Cond_Cmpt	561566	female
Se29	Engine_Cmpt	561566	female	So13	Evap_Cmpt	563204	female
Se30	Enginedoor	562877	female	So14	Servicecmpt.	641385	male
Se31	Enginedoor	562877	female	So15	Servicecmpt.	641385	male
Se32	Rear_Axle_Cmpt	562426	male	So16	Servicecmpt.	641385	male
Se33	Rear_Axle_Cmpt	562856	male	So17	Servicecmpt.	562848	male
Se34	Rear_Axle_Cmpt	562426	male	So18	Pneumatic_plate	641385	male
Se35	Rear_Axle_Cmpt	562426	male	So19	Pneumatic_plate	641385	male
Se36	Rear_Axle_Cmpt	562427	male	So20	Servicecmpt.	641385	male
Se37	Front_Axle_LH	641132	female	So21	Front_Axle_Cmpt	564046	female
Se38	Front_Axle_RH	641132	female	So22	Front_Axle_Cmpt	564046	female
Se39	Rear_Axle_LH	641132	female	So23	Rear_Axle_Cmpt	564046	female
Se40	Rear_Axle_LH	641132	female	So24	Rear_Axle_Cmpt	564046	female
Se41	Condensor_cmpt.	562877	female	So27	Rearaxlecmpt.	564045	female
Se45	Servicecmpt.	563409	male	So50	Rearaxlecmpt.	564046	female
Se46	Rearaxlecmpt.	562348	female	So52	Rearaxlecmpt.	564045	female
Se49	Engine_Cmpt	561690	male	So54	Enginecmpt.	564045	female
Se51	Driverseat	563589	male	spBar4	Enginecmpt.	564135	male
Se53	Service_Cmpt	563159	female	spBar5	Enginecmpt.	564135	male
Se54	Service_Cmpt	563159	female	spBar6	Enginecmpt.	564135	male
Se55	Service_Cmpt	563159	female	spBar7	Enginecmpt.	564135	male
Se56	WCLdoor	562479	female	spBar11	Engine_Cmpt.	564135	male
Se60	Service_Cmpt	563409	male	spBar12	Engine_Cmpt.	564135	male
Se63	Rearaxlecmpt.	641132	female	spBar13	Enginecmpt.	564135	male
Se64	Rearaxlecmpt.	641132	female	spBar14	Enginecmpt.	564135	male

CONNECTORS LIST

No	Location	Part #	Gender	No	Location	Part #	Gender
spBar15	Enginecmpt.	564135	male	Sub2.A	Passenger_Area	564004	female
spBar16	Enginecmpt.	564135	male	Sw1.C258	Driver_Area	561188	female
spBar19	Condensorcmpt.	564135	male	Sw1.C259	Driver_Area	561186	male
spBar20	Condensorcmpt.	564135	male	Sw2	Dash	562763	male
spBar21	Condensorcmpt.	564135	male	Sw3	Dash	562763	male
spBar22	Enginecmpt.	564135	male	Sw4	Dash	562763	male
spBar23	Enginecmpt.	564135	male	Sw5	Dash	562763	male
spBar24	Enginecmpt.	564135	male	Sw6	Dash	562763	male
Spk1_L	Parcel_Rack_LH	563994	male	Sw10A	LH_Console	562763	male
Spk1_R	Parcel_Rack_RH	563994	male	Sw12	Dash	562763	male
Spk2_L	Parcel_Rack_LH	563994	male	Sw14	Dash	562763	male
Spk2_R	Parcel_Rack_RH	563994	male	Sw16	Dash	562763	male
Spk3_L	Parcel_Rack_LH	563994	male	Sw17	Dash	562763	male
Spk3_R	Parcel_Rack_RH	563994	male	Sw18A	LH_Console	562763	male
Spk4_L	Parcel_Rack_LH	563994	male	Sw20	Dash	562763	male
Spk4_R	Parcel_Rack_RH	563994	male	Sw21	Dash	562763	male
Spk5_L	Parcel_Rack_LH	563994	male	Sw24	Dash	562763	male
Spk5_R	Parcel_Rack_RH	563994	male	Sw25	Dash	562763	male
Spk6_L	Parcel_Rack_LH	563994	male	Sw26	Dash	562763	male
Spk6_R	Parcel_Rack_RH	563994	male	Sw27	Dash	562763	male
Spk7_L	Parcel_Rack_LH	563994	male	Sw29	Dash	562763	male
Spk7_R	Parcel_Rack_RH	563994	male	Sw30	RJB	563135	male
Spk8_L	Parcel_Rack_LH	563994	male	Sw32	Dash	561477	female
Spk8_R	Parcel_Rack_RH	563994	male	Sw33	Dash	561476	male
Spk9_L	Parcel_Rack_LH	563994	male	Sw34	Outside_Front_RH	562477	male
Spk9_R	Parcel_Rack_RH	563994	male	Sw35	Console	562763	male
Spk10_L	Parcel_Rack_LH	563994	male	Sw38	LH_Console	562763	male
Spk10_R	Parcel_Rack_RH	563994	male	Sw39.A	RJB	562403	female
Spk11_L	Parcel_Rack_LH	563994	male	Sw39.B	RJB	562403	female
Spk11_R	Parcel_Rack_RH	563994	male	Sw40	LH_Console	561690	male
Spk12_L	Parcel_Rack_LH	563994	male	Sw41	LH_Console	562749	male
Spk12_R	Parcel_Rack_RH	563994	male	Sw42	Lugg_Cmpt	561636	female
Spk13_L	Parcel_Rack_LH	563994	male	Sw43	LH_Console	561690	male
Spk13_R	Parcel_Rack_RH	563994	male	Sw44.A	FJB	562403	female
Spk14_L	Parcel_Rack_LH	563994	male	Sw44.B	FJB	562403	female
Spk14_R	Parcel_Rack_RH	563994	male	Sw45.A	5th_Lugg_Cmpt	562485	male
Spk15_L	Parcel_Rack_LH	563994	male	Sw45.B	5th_Lugg_Cmpt	562486	female
Spk15_R	Parcel_Rack_RH	563994	male	Sw46.A	5th_Lugg_Cmpt	562485	male
Spk16_L	Parcel_Rack_LH	563994	male	Sw46.B	5th_Lugg_Cmpt	562486	female
Spk16_R	Parcel_Rack_RH	563994	male	Sw47.A	3rd_Lugg_Cmpt	562485	male
SpkDr_L	Parcel_Rack_LH	563994	male	Sw47.B	3rd_Lugg_Cmpt	562486	female
SpkDr_R	Parcel_Rack_RH	563994	male	Sw48.A	3rd_Lugg_Cmpt	562485	male
Sub1.A	Passenger_Area	564004	female	Sw48.B	3rd_Lugg_Cmpt	562486	female

CONNECTORS LIST

No	Location	Part #	Gender	No	Location	Part #	Gender
Sw49.A	2nd_Lugg_Cmpt	562485	male	Sw156	LH_Console	562763	male
Sw49.B	2nd_Lugg_Cmpt	562486	female	Sw157	Dash	562763	male
Sw50.A	2nd_Lugg_Cmpt	562485	male	Sw158	Dash	562763	male
Sw50.B	2nd_Lugg_Cmpt	562486	female	Sw629	Dash	562763	male
Sw51.A	1st_Lugg_Cmpt	562485	male	Sw660	Rear_Galley	562763	male
Sw51.B	1st_Lugg_Cmpt	562486	female	Sw661	Rear_Galley	562763	male
Sw52.A	1st_Lugg_Cmpt	562485	male	Sw662	Dash	562763	male
Sw52.B	1st_Lugg_Cmpt	562486	female	Sw663	Rear_Galley	562763	male
Sw55.A	Lavatory	560488	female	Sw670	dash	562763	male
Sw55.B	Lavatory	560488	female	sym698_166.A	Parcel_rack	564489	female
Sw56.A	Lavatory	560488	female	sym698_166.B	Parcel_rack	562706	female
Sw56.B	Lavatory	560488	female	sym698_166.C	Parcel_rack	562706	female
Sw58	Engine_Cmpt.	563135	male	sym699_166.A	Parcel_rack	564489	female
Sw59	Enginecmpt.	563135	male	sym699_166.B	Parcel_rack	562706	female
Sw63A	LHConsole	562763	male	sym699_166.C	Parcel_rack	562706	female
Sw64.A	Service_Cmpt	560815	female	sym700_166.A	Parcel_rack	564489	female
Sw64.B	Service_Cmpt	560815	female	sym700_166.B	Parcel_rack	562706	female
Sw82	RJB	563135	male	sym700_166.C	Parcel_rack	562706	female
Sw83.A	Dash	560082	female	sym812_291.A	Parcelrack	565180	female
Sw83.B	Dash	560815	female	tab69	Parcelrack	561626	N/A
Sw83.C	Dash	560082	female	Tab70a	Parcelrack	561626	N/A
Sw83.D	Dash	560815	female	Tab70b	Parcelrack	561626	N/A
Sw85	LH_Console	562749	male	tab71a	Parcelrack	561626	N/A
Sw95.A	WCLdoor	562615	female	TermL150	Parcel_rack	562505	N/A
Sw95.B	WCLdoor	562615	female	TermL248	Parcel_rack	562505	N/A
Sw95.C	WCLdoor	562615	female	VECF1	FJB	563186	male
Sw96.A	WCL_Door	562615	female	VECF2	FJB	563183	male
Sw96.B	WCL_Door	562615	female	VECF3	FJB	563185	male
Sw96.C	WCLdoor	562615	female	VECF4	FJB	563182	male
Sw97.A	WCLsystem	562615	female	VECF9	FJB	563448	male
Sw97.B	WCLsystem	562615	female	VECF10	FJB	563181	male
Sw97.C	WCLsystem	562615	female	VECF11	FJB	563184	male
Sw98.A	WCLsystem	562615	female	VECF12	FJB	563187	male
Sw98.B	WCLsystem	562615	female	VECR1	RJB	563186	male
Sw98.C	WCLsystem	562615	female	VECR2	RJB	563183	male
Sw100	dash	562763	male	VECR3	RJB	563185	male
Sw107	dash	562763	male	VECR4	RJB	563182	male
Sw108	dash	562763	male	VECR4.	RJB	563182	male
Sw124	DashBoard	562763	male	VECR9	RJB	563448	male
Sw125.A	Service_Cmpt	561457	female	VECR10	RJB	563181	male
Sw125.B	Service_Cmpt	561457	female	VECR11	RJB	563184	male
Sw137	Dash	562763	male	VECR12	RJB	563187	male
Sw149	Dash	562763	male	VECT3	Rear_vehicule	563718	male

CONNECTORS LIST

No	Location	Part #	Gender	No	Location	Part #	Gender
VECT4	Rear_vehicule	563714	male				
Y80	Engine_Cmpt	563789	male				
Y81	Cond_Cmpt	563793	male				

CONNECTORS LIST

No	Location	Part #	Gender	No	Location	Part #	Gender
24SS_OP	Parcel_Rack_LH	563071	male	A34.J	Enginecmpt.	568118	male
24SS_OP	Parcel_Rack_LH	563040	female	A34.K	Enginecmpt.	564270	male
24SS_OP_2	Parcel_Rack_LH	563071	male	A34.L	Enginecmpt.	564269	male
24SS_OP_2	Parcel_Rack_LH	563040	female	A36.JA	FJB	562767	male
120V_inlet	Rearvehicule	561572	male	A36.JB	FJB	562765	male
A1	RJB	563975	male	A36.JC	FJB	562957	male
A2	FJB	563984	male	A39.P101	Parcel_Rack_LH	563201	male
A3	Dash	562363	male	A39.P901	Parcel_Rack_LH	563953	male
A4.A	Service_Cmpt	562428	female	A41.J1	FJB	563679	male
A4.B	Service_Cmpt	561188	female	A41.J2	FJB	564037	male
A5	Service_Cmpt	562428	female	A41.J3	FJB	564004	male
A6	Engine_Cmpt	562427	male	A60.A	Parcel_Rack_LH	563071	male
A7	Rear_Axle_Cmpt	563979	male	A60.B	Parcel_Rack_LH	562706	female
A9.Cx1	FJB	564041	female	A60.C	Parcel_Rack_LH	901110	male
A9.Cx2	FJB	563678	male	A60.D	Parcel_Rack_LH	901110	male
A9.Cx3	FJB	564037	female	A61.A	Parcel_Rack_LH	562464	male
A9.Cx4	FJB	564038	female	A61.B	Parcel_Rack_LH	562465	male
A10.X1	Engine_Cmpt	563135	male	A65.A	Parcel_Rack_LH	563025	male
A10.X3	Engine_Cmpt	563134	female	A65.B4	Parcel_Rack_LH	bidon	male
A11	LH_Console	563142	male	A65.B5	Parcel_Rack_LH	bidon	male
A14.A	Dash	562766	male	A65.B6	Parcel_Rack_LH	bidon	male
A14.B	Dash	562767	male	A65.D	Parcel_Rack_LH	bidon	male
A14.C	Dash	562765	male	A65.E	Parcelrack	563071	male
A15	Dash	562464	male	A65.G1	Parcel_Rack_LH	563071	male
A17.D	RJB	561932	male	A65.G2	Parcel_Rack_LH	563071	male
A18.J1	FJB	562794	male	A65.G3	Parcel_Rack_LH	563071	male
A18.J2	FJB	562650	male	A65.H1	Parcel_Rack_LH	561716	female
A19	LH_Console	562878	female	A65.H2	Parcel_Rack_LH	561716	female
A20	Parcel_Rack_LH	561477	female	A65.H3	Parcel_Rack_LH	561716	female
A24.A	RH_Console	561890	male	A65.J	Parcel_Rack_LH	562465	male
A24.B	RH_Console	561566	female	A69L.A	Parcel_Rack_LH	563025	male
A24.C	RH_Console	561889	female	A69L.B1	Parcel_Rack_LH	bidon	male
A25	Parcel_Rack_LH	563025	male	A69L.B2	Parcel_Rack_LH	bidon	male
A26.P1	Enginecmpt.	562350	male	A69L.B3	Parcel_Rack_LH	bidon	male
A26.P2	Enginecmpt.	563322	female	A69L.B4	Parcel_Rack_LH	bidon	male
A26.P4	Enginecmpt.	568088	male	A69L.C	Parcel_Rack_LH	bidon	male
A27	Service_Cmpt	562929	male	A69R.A	Parcel_Rack_LH	563025	male
A28	Service_Cmpt	562928	male	A69R.B1	Parcel_Rack_LH	bidon	male
A29	Dash	562464	male	A69R.B2	Parcel_Rack_LH	bidon	male
A29.	Dash	562464	male	A69R.B3	Parcel_Rack_LH	bidon	male
A29.	Dash	565871	female	A69R.B4	Parcel_Rack_LH	bidon	male
A33.A	Parcel_Rack_LH	563071	male	A69R.C	Parcel_Rack_LH	bidon	male
A33.B	Parcel_Rack_LH	562330	female	A70c	Parcel_Rack_LH	561540	female

CONNECTORS LIST

No	Location	Part #	Gender	No	Location	Part #	Gender
A77	Parcelrack	564547	male	A120.C3	Dashboard	563958	male
A78	Parcelrack	562583	female	A121.Vsa	Dash	563679	male
A79	Parcelrack	562583	female	A121.Vsb	Dash	563678	male
A80	Parcelrack	562479	female	A121.Vsc	Dash	564037	male
A81.JA	FJB	562767	male	A121.Vsd	Dash	564118	male
A81.JB	FJB	562765	male	A130	Driver_Area	563226	male
A81.JC	FJB	562957	male	A131.A	Engine_Cmpt	561782	male
A83	Parcelrack	565970	female	A131.B	Engine_Cmpt	561781	female
A95.A	Parcelrack	564489	female	A137A	Condensercmpt.	20429843	male
A95.B	Parcelrack	562706	female	A138	Cond_Cmpt	563787	male
A95.C	Parcelrack	562706	female	A139	Dash	564501	male
A96.A	FJB	564205	male	A150	Parcelrack	21280133	male
A96S	FJB	564073	female	A152.A	Parcelrack	561550	male
A97	Dash	563226	male	A152.B	Parcelrack	563071	male
A97A	FJB	563226	male	A152.C	Parcelrack	563071	male
A97A	FJB	563613	female	A152.D	Parcelrack	563071	male
A97B	FJB	563226	male	A152.E	Parcelrack	563071	male
A97B	FJB	563613	female	A152.F	Parcelrack	563071	male
A97S.A1	Dash	564401	male	A152.G	Parcelrack	563071	male
A97S.A2	Dash	564402	male	A152.H	Parcelrack	563071	male
A97S.A3	Dash	564403	male	A152.I	Parcelrack	563071	male
A99	FJB	564205	male	A152.J	Parcelrack	563071	male
A100	Front_Axle_Cmpt	563758	female	A152.K	Parcelrack	562779	male
A100S	Front_Axle_Cmpt	563758	female	A152.L	Parcelrack	562779	male
A101	Rear_RH_Axle_Cmpt	563758	female	A162.A	FrontCab	561690	male
A101S	Rear_RH_Axle_Cmpt	563758	female	A162.B	FrontCab	561782	male
A102	Rear_RH_Axle_Cmpt	563758	female	A164.A	RH_trapezoidal_window	561690	male
A102S	Rear_RH_Axle_Cmpt	563758	female	A164.B	RH_trapezoidal_window	561782	male
A103	Dash	562070	female	A166	RearCab	561637	male
A107	EngineCmpt.	560336	male	A614.A	Parcelrack	561550	male
A108	RJB	562766	male	A614.C1	Parcelrack	563071	male
A109A	FJB	564141	male	A614.C2	Parcelrack	563071	male
A111	RJB	562550	female	A614.C3	Parcelrack	563071	male
A113.A	Parcel_Rack_LH	563960	male	A614.C4	Parcelrack	563071	male
A113.B	Parcel_Rack_LH	563962	male	A614.C5	Parcelrack	563071	male
A113.C1	Parcel_Rack_LH	563956	male	A614.C6	Parcelrack	563071	male
A113.C2	Parcel_Rack_LH	563957	male	A614.I/O	ParcelRack	bidon	male
A113.C3	Parcel_Rack_LH	563958	male	A614.P1	Parcelrack	562783	male
A114A	Dash	564252	male	A614.P2	Parcelrack	562783	male
A120.A	Dashboard	563960	male	A614.P3	Parcelrack	562783	male
A120.B	Dashboard	563962	male	AE41.J1	FJB	563679	male
A120.C1	Dashboard	563956	male	AE41.J2	FJB	564037	female
A120.C2	Dashboard	563957	male	AE41.J3	FJB	564004	male

CONNECTORS LIST

No	Location	Part #	Gender	No	Location	Part #	Gender
AE42.J1	FJB	563679	male	AE53.J2	LH_ParcelRack	564037	female
AE42.J2	FJB	564037	female	AE53.J3	LH_ParcelRack	565957	male
AE42.J3	FJB	564004	male	AE54.J1	Evaporatorcmpt.	563679	male
AE43.J1	FJB	563679	male	AE54.J2	Evaporatorcmpt.	564037	female
AE43.J2	FJB	564037	male	AE54.J3	Evaporatorcmpt.	565957	male
AE43.J3	FJB	565957	male	AE55.J1	Dash	563679	male
AE44.J1	FJB	563679	male	AE55.J2	Dash	564037	female
AE44.J2	FJB	564037	female	AE55.J3	Dash	564004	male
AE44.J3	FJB	565957	male	AE56.J1	Dash	563679	male
AE45.J1	FJB	563679	male	AE56.J2	Dash	564037	male
AE45.J2	FJB	564037	female	AE56.J3	Dash	564004	male
AE45.J3	FJB	565957	male	AE57.J1	WCLcmpt.	563679	male
AE46.J1	FJB	563679	male	AE57.J2	WCLcmpt.	564037	male
AE46.J2	FJB	564037	female	AE57.J3	WCLcmpt.	564004	male
AE46.J3	FJB	565957	male	AltLL.A	Enginecmpt.	563746	female
AE47.J1	RH_console	563679	male	AltLL.B	Enginecmpt.	560815	female
AE47.J2	RH_console	564037	female	AltLL.C	Enginecmpt.	564469	female
AE47.J3	RH_console	565957	male	AltLR.A	enginecmpt.	563746	female
AE48.J1	RH_console	563679	male	AltLR.B	Enginecmpt.	560815	female
AE48.J2	RH_console	564037	female	AltLR.C	Enginecmpt.	564469	female
AE48.J3	RH_console	565957	male	AltUR.A	Enginecmpt.	563746	female
AE49..J1	RJB	563679	male	AltUR.B	Enginecmpt.	560815	female
AE49..J2	RJB	564037	male	AltUR.C	Enginecmpt.	564469	female
AE49..J3	RJB	565957	male	B85	Engine_Cmpt	563815	male
AE49.J1	RJB	563679	male	B96	Engine_Cmpt	563821	male
AE49.J2	RJB	564037	male	B96B	Engine_Cmpt	563823	male
AE49.J3	RJB	565957	male	B97	Engine_Cmpt	563816	male
AE50..J1	RJB	563679	male	B98	Engine_Cmpt	563817	male
AE50..J2	RJB	564037	male	B99	Engine_Cmpt	563815	male
AE50..J3	RJB	565957	male	B115A	Enginecmpt.	564226	male
AE50.J1	RJB	563679	male	B142C	Condensercmpt.	563793	male
AE50.J2	RJB	564037	male	B310	Enginecmpt.	565967	male
AE50.J3	RJB	565957	male	C1	FJB	563589	male
AE51.J1	RJB	563679	male	C1	FJB	563590	female
AE51.J2	RJB	564037	female	C1S	FJB	563589	male
AE51.J3	RJB	565957	male	C1S	FJB	563590	female
AE52..J1	RJB	563679	male	C2	Service_Cmpt	563580	male
AE52..J2	RJB	564037	male	C2	Service_Cmpt	563581	female
AE52..J3	RJB	565957	male	C2A	FJB	563580	male
AE52.J1	RJB	563679	male	C2A	FJB	563581	female
AE52.J2	RJB	564037	female	C2B	FJB	564034	male
AE52.J3	RJB	565957	male	C2B	FJB	564035	female
AE53.J1	LH_ParcelRack	563679	male	C3_plug	RJB	563589	male

CONNECTORS LIST

No	Location	Part #	Gender	No	Location	Part #	Gender
C3_socket	RJB	563590	female	C20A	Evap_Cmpt	562485	male
C3AP	FJB	563589	male	C20A	Evap_Cmpt	562486	female
C3AP	FJB	563590	female	C20B	Evap_Cmpt	562485	male
C3AS	FJB	563589	male	C20B	Evap_Cmpt	562486	female
C3AS	FJB	563590	female	C23	Evaporatorcmpt.	564034	male
C3S	RJB	563593	male	C23	Evaporatorcmpt.	564035	female
C3S	RJB	563590	female	C24_plug	Evap_Cmpt	561690	male
C4	FJB	563580	male	C24_socket	Evap_Cmpt	561566	female
C4	FJB	563581	female	C25	Parcel_Rack_LH	561550	male
C5	FJB	563589	male	C25	Parcel_Rack_LH	561667	female
C5	FJB	563590	female	C26	Ureacmpt.	563226	male
C5S	FJB	563589	male	C26	Ureacmpt.	563613	female
C5S	FJB	563590	female	C26A	Ureacmpt.	568110	male
C6	FJB	563582	male	C26A	Ureacmpt.	568109	female
C6	FJB	563583	female	C26B	Ureacmpt.	563227	male
C7	Service_Cmpt	562581	male	C26B	Ureacmpt.	563614	female
C7	Service_Cmpt	562583	female	C29	4rd_Lugg_Cmpt	563651	male
C8	FJB	563227	male	C29	3rd_Lugg_Cmpt	563652	female
C8	FJB	563614	female	C30	3rd_Lugg_Cmpt	561710	male
C9	RJB	561986	male	C30	3rd_Lugg_Cmpt	561709	female
C9	RJB	561987	female	C31W	Parcelrack	563227	male
C10	Engine_Cmpt	562581	male	C31W	Parcelrack	563614	female
C10	Engine_Cmpt	562583	female	C32	lavatory	561734	male
C11	Service_Cmpt	563580	male	C32	Lavatory	561735	female
C11	Service_Cmpt	563581	female	C32W	WCLcmpt.	561669	male
C12	Engine_Cmpt	562581	male	C32W	WCLcmpt.	561670	female
C12	Engine_Cmpt	562583	female	C33	WCLcmpt.	564034	male
C13_plug	RH_Console	563589	male	C33	WCLcmpt.	564035	female
C13_socket	RH_Console	563590	female	C34	RH_Console	561986	male
C13S	RH_Console	563589	male	C34	RH_Console	561987	female
C13S	RH_Console	563590	female	C36	FJB	561986	male
C14	WCLsystem	561550	male	C36	FJB	561987	female
C14	WCLsystem	561667	female	C37	Parcel_Rack_LH	562557	male
C15A	EvaporatorCmpt	568110	male	C37	Parcel_Rack_LH	562558	female
C15A	EvaporatorCmpt	568109	female	C37.	Parcel_Rack_LH	561734	male
C16	RJB	561577	male	C37.	Parcel_Rack_LH	561735	female
C16	RJB	561605	female	C38	Parcelrack	562555	male
C17	RJB	560195	male	C38	Parcelrack	562556	female
C17	RJB	560169	female	C38.	Parcelrack	561734	male
C18	FJB	561986	male	C38.	Parcelrack	561735	female
C18	FJB	561987	female	C39	Parcelrack	562503	male
C19	RJB	561986	male	C39	Parcelrack	562507	female
C19	RJB	561987	female	C39A	Firesuppressioncmpt.	561782	male

CONNECTORS LIST

No	Location	Part #	Gender	No	Location	Part #	Gender
C39A	Firesuppressioncmpt.	561781	female	C72	FJB	561646	male
C40	Dash	562485	male	C72	FJB	561645	female
C40	Dash	562486	female	C74	FJB	561645	female
C41	RJB	561782	male	C74	FJB	561646	male
C41	RJB	561781	female	C87	Engine_Cmpt	562485	male
C44_plug	FJB	561577	male	C87	Engine_Cmpt	562486	female
C44_socket	FJB	561605	female	C88	WCL_Cmpt.	563226	male
C45	FJB	561643	male	C88	WCL_Cmpt.	563613	female
C45	FJB	561642	female	C90	RJB	563582	male
C46	3rdlugg.cmpt.	562549	male	C90	RJB	563583	female
C46	3rdlugg.cmpt.	562550	female	C91	RJB	562285	male
C47	FJB	565207	male	C91	RJB	562282	female
C48	RJB	565208	female	C94_plug	FJB	563589	male
C49	FJB	562005	male	C94_socket	FJB	563590	female
C49	FJB	561714	female	C96	FJB	561646	male
C50	RJB	568110	male	C96	FJB	561645	female
C50	RJB	568109	female	C97	FJB	561643	male
C54	Engine_Cmpt.	563226	male	C97	FJB	561642	female
C54	Engine_Cmpt.	563613	male	C99	Enginecmpt.	562581	male
C54A	Ureacmpt.	568110	male	C99	Enginecmpt.	562583	female
C54A	Ureacmpt.	568109	female	C100	Evaporatorcmpt.	562477	male
C54B	Engine_Cmpt.	562477	male	C100	Evaporatorcmpt.	562479	female
C54B	Engine_Cmpt.	562479	female	C100S	Evaporator_Cmpt.	562477	male
C55	Evap_Cmpt	561577	male	C100S	Evaporator_Cmpt.	562479	female
C55	Evap_Cmpt	561605	female	C101	Service_Cmpt	561690	male
C59	RJB	561643	male	C101	Service_Cmpt	561566	female
C59	RJB	561642	female	C103_plug	FJB	562485	male
C63	Entrace_Door	562581	male	C103_socket	FJB	562486	female
C63	Entrace_Door	562583	female	C105_plug	FJB	562581	male
C64	Engine_Cmpt.	568110	male	C105_socket	FJB	562583	female
C64	Engine_Cmpt.	568109	female	C106_plug	FJB	562581	male
C64X	Aisle_section	560898	male	male	FJB	562583	female
C64X	Aisle_section	560900	female	female	Enginecmpt.	562885	female
C66_plug	Evap_Cmpt	561577	male	male	Enginecmpt.	562884	female
C66_socket	Evap_Cmpt	561605	female	female	Enginecmpt.	562885	female
C67	Parcelrack	561734	male	male	Enginecmpt.	562884	female
C67	Parcelrack	561735	female	female	Enginecmpt.	562885	female
female	C69_plug	FJB	561690	C107C	Enginecmpt.	562884	female
male	C69_socket	FJB	561566	C108	Dash	562557	male
female	C70	FJB	562557	C108	Dash	562558	female
male	C70	FJB	562558	C110	Dash	568110	male
female	C71	FJB	561646	C110	Dash	568109	female
male	C71	FJB	561645	C119A	rear_engine_door	568110	male

CONNECTORS LIST

No	Location	Part #	Gender	No	Location	Part #	Gender
C119A	rear_engine_door	568109	female	C213	Parcel_Rack_LH	561515	male
C124	DashBoard	562503	male	C213	Parcel_Rack_LH	561552	female
C124	DashBoard	562507	female	C222	FJB	562477	male
C131A	Engine_Cmpt	561782	male	C222	FJB	562479	female
C131A	Engine_Cmpt	561781	female	C223	FJB	563227	male
C131B	Engine_Cmpt	561782	male	C223	FJB	563614	female
C131B	Engine_Cmpt	561781	female	C224	FJB	561637	male
C144	RJB	560852	male	C224	FJB	561636	female
C144	RJB	560851	female	C225	FJB	562650	male
C152	Cond_Cmpt	561611	male	C225	FJB	562649	female
C152	Cond_Cmpt	561610	female	C226	FJB	562650	male
C162	FrontCab	561690	male	C226	FJB	562649	female
C162	FrontCab	561566	female	C226a_plug	FJB	562650	male
C164A	RH_Trapezoidal_Window	561690	male	C226a_socket	FJB	562649	female
C164A	RH_Trapezoidal_Window	561566	female	C266	Parcelrack	561782	male
C164B	RH_Trapezoidal_Window	561782	male	C266	Parcelrack	561781	female
C164B	RH_Trapezoidal_Window	561781	female	C267	Parcelrack	561782	male
C167	FJB	561577	male	C267	Parcelrack	561781	female
C167	FJB	561605	female	C279	Service_Cmpt	562477	male
C170	LH_Console	561637	male	C279	Service_Cmpt	562479	female
C170	LH_Console	561636	female	C279A	Service_Cmpt	562477	male
C171	LH_Console	561646	male	C279A	Service_Cmpt	562479	female
C171	LH_Console	561645	female	C284	Parcel_Rack	561782	male
C175	RJB	563226	male	C284	Parcel_Rack	561781	female
C175	RJB	563613	female	C284_1	Parcel_Rack	561782	male
C175.	RJB	563226	male	C284_1	Parcel_Rack	561781	female
C175.	RJB	563613	female	C284_2	Parcel_Rack	561782	male
C187	RJB	561577	male	C284_2	Parcel_Rack	561781	female
C187	RJB	561605	female	C284_3	Parcel_Rack	561782	male
C188	Evap_Cmpt	561577	male	C284_3	Parcel_Rack	561781	female
C188	Evap_Cmpt	561605	female	C284_4	Parcel_Rack	561782	male
C189	RJB	561986	male	C284_4	Parcel_Rack	561781	female
C189	RJB	561987	female	C284_5	Parcel_Rack	561782	male
C193_plu	RJB	563589	male	C284_5	Parcel_Rack	561781	female
C193_so	RJB	563590	female	C284_6	Parcel_Rack	561782	male
C194	FJB	563589	male	C284_6	Parcel_Rack	561781	female
C194	FJB	563590	female	C298	Parcelrack	561782	male
C195	dash	563347	male	C298	Parcelrack	561781	female
C195	dash	560489	female	C333	Upper_front	561550	male
C206	Parcel_Rack_RH	562503	male	C333	Upper_front	561667	female
C206	Parcel_Rack_RH	562507	female	C355	RJB	563582	male
C207	Parcel_Rack_LH	562503	male	C355	RJB	565887	female
C207	Parcel_Rack_LH	562507	female	C356	Parcelrack	561710	male

CONNECTORS LIST

No	Location	Part #	Gender	No	Location	Part #	Gender
C356	Parcelrack	561709	female	C575	Parcel_Rack_RH	562503	male
C356A	Parcelrack	561515	male	C575	Parcel_Rack_RH	562507	female
C356A	Parcelrack	561552	female	C576B	Parcel_Rack_RH	562006	male
C357	Parcelrack	561847	male	C576B	Parcel_Rack_RH	560908	female
C357	Parcelrack	561862	female	C576BB	Parcelrack	562006	male
C380A	Dash	564222	male	C576BB	Parcelrack	560908	female
C380A	Dash	564224	female	C577A	Parcel_Rack	562006	male
C381	Parcel_Rack	561847	male	C577A	Parcel_Rack	560908	female
C381	Parcel_Rack	561862	female	C577AA	Parcelrack	562006	male
C382	Under_Seat	561580	male	C577AA	Parcelrack	560908	female
C382	Under_Seat	561582	female	C578	Parcel_Rack_LH	562503	male
C397	RJB	562285	male	C578	Parcel_Rack_LH	562507	female
C397	RJB	562282	female	C582	FJB	561690	female
C397.	RJB	562285	male	C582	FJB	561566	female
C397.	RJB	562282	female	C600	Dash	563226	male
C430	LH_Console	562363	male	C600	Dash	563613	female
C430	LH_Console	561188	female	C600A_pl	Dash	563226	male
C452	Dash	561669	male	C600A_so	Dash	563613	female
C452	Dash	561670	female	C600B	Dash	563226	male
C463	rearaxlecompt.	568112	male	C600B	Dash	563613	female
C463	rearaxlecompt.	568111	female	C601	LHRoofWinAjar	561476	male
C464	FJB	564222	male	C601	LHRoofWinAjar	561477	female
C464	FJB	564224	female	C602	RH_Roof_Win_Ajar	561476	male
C464A	Dash	564222	male	C602	RH_Roof_Win_Ajar	561477	female
C464A	Dash	564224	female	C603	RHRoofWinAjar	561476	male
C464B	FJB	564222	male	C603	RHRoofWinAjar	561477	female
C464B	FJB	564224	female	C614	Passenger_Area	563071	male
C465	Parcelrack	562581	male	C614	Passenger_Area	563040	female
C465	Parcelrack	562583	female	C615	Passenger_Area	563071	male
C506	FJB	561687	male	C615	Passenger_Area	563040	female
C506	FJB	561685	female	C617	Mirror_LH	563801	male
C542	Parcelrack	561550	male	C617	Mirror_LH	563800	female
C542	Parcelrack	561667	female	C618	Mirror_RH	563801	male
C558	Parcelrack	562503	male	C618	Mirror_RH	563800	female
C558	Parcelrack	562507	female	C621	Aisle_section	560898	male
C564	Parcelrack	562503	male	C621	Aisle_section	560900	female
C564	Parcelrack	562507	female	C624_plu	Rear_Galley	561690	male
C564_Sp	Parcelrack	562503	male	C624_soc	Rear_Galley	561566	female
C564_Sp	Parcelrack	562507	female	C626	FJB	562485	male
C566	Parcelrack	562503	male	C626	FJB	562486	female
C566	Parcelrack	562507	female	C629	DashBoard	561690	male
C567	Parcelrack	562503	male	C629	DashBoard	561566	female
C567	Parcelrack	562507	female	C630	Parcel_Rack	561690	male

CONNECTORS LIST

No	Location	Part #	Gender	No	Location	Part #	Gender
C630	Parcel_Rack	561566	female	C_Audio_HDMI	Parcel_Rack	901283	female
C633	Aisle_section	560898	male	C_AUX	Parcelrack	563071	male
C633	Aisle_section	560900	female	C_AUX	Parcelrack	563040	female
C634	Aisle_section	560898	male	C_AUX_2	Parcelrack	563071	male
C634	Aisle_section	560900	female	C_AUX_2	Parcelrack	563040	female
C636	Aisle_section	560898	male	C_INV1	Parcelrack	562337	male
C636	Aisle_section	560900	female	C_INV1	Parcelrack	562338	male
C645	Aisle_section	560898	male	C_INV2	Parcelrack	562337	male
C645	Aisle_section	560900	female	C_INV2	Parcelrack	562338	male
C660	Rear_Galley	562646	male	C_LineOut	Parcelrack	563962	male
C660	Rear_Galley	562647	female	C_LineOut	Parcelrack	564489	female
C662	FJB	562477	male	C_Mo9	Evap_Cmpt	561577	male
C662	FJB	562479	female	C_Mo9	Evap_Cmpt	561605	female
C700	FJB	561637	male	C_Mo9:2	Evap_Cmpt	561577	male
C700	FJB	561636	female	C_Mo9:2	Evap_Cmpt	561605	female
C710	Front_LH_ParcelRack	561637	male	C_Se51	Driverseat	563589	male
C710	Front_LH_ParcelRack	561636	female	C_Se51	Driverseat	563590	female
C752_plug	Parcel_Rack	901062	male	C_USB	Parcel_Rack	562069	male
C752_socket	Parcel_Rack	901283	female	C_USB	Parcel_Rack	562070	female
C753_plug	Parcel_Rack	901062	male	CCAN1	FJB	562650	male
C753_socket	Parcel_Rack	901283	female	CCAN1	FJB	562649	female
C766	Parcelrack	561662	male	CCAN2	FJB	562650	male
C766	Parcelrack	561661	female	CCAN2	FJB	562649	female
C768	Parcel_Rack	901062	male	CCAN3	FJB	562650	male
C768	Parcel_Rack	901283	female	CCAN3	FJB	562649	female
C769	Parcel_Rack	901062	male	CCAN4	FJB	562650	male
C769	Parcel_Rack	901283	female	CCAN4	FJB	562649	female
C777	Dash	562477	male	CCust	RJB	562477	male
C777	Dash	562479	female	CCust	RJB	562479	female
C_A60DB	Parcel_Rack	563071	male	CCust.	RJB	562477	male
C_A60DB	Parcel_Rack	563040	female	CCust.	RJB	562479	female
C_A69R	Parcel_Rack	563025	male	CFHPR1	Parcelrack	564560	male
C_A97	Dash	563226	male	CIND-1.A	Parcelrack	560908	female
C_A97	Dash	563613	female	CIND-1.B	Parcelrack	560908	female
C_ALT	Enginecmpt.	562581	male	CIND-2.A	Parcelrack	560908	female
C_ALT	Enginecmpt.	562583	female	CIND-2.B	Parcelrack	560908	female
C_ALT3	Enginecmpt.	562477	male	CIND-11.A	Parcelrack	560908	female
C_ALT3	Enginecmpt.	562479	female	CIND-11.B	Parcelrack	560908	female
C_AUDIO_AUX	Parcel_Rack	562557	male	CINDWC-1.A	Parcelrack	560908	female
C_AUDIO_AUX	Parcel_Rack	562558	female	CINDWC-1.B	Parcelrack	560908	female
C_Audio_HDMI	Parcel_Rack	901062	male	CL1	FJB	562485	male
C_Audio_HDMI	Parcel_Rack	901283	female	CL1	FJB	562486	female
C_Audio_HDMI	Parcel_Rack	901062	male	CL58A	Aisle_Section	560898	male

CONNECTORS LIST

No	Location	Part #	Gender	No	Location	Part #	Gender
CL58A	Aisle_Section	560900	female	L29	Parcelrack	560898	male
CP1	Passenger_Area	561782	male	L30	Parcelrack	560898	male
CP1	Passenger_Area	561781	female	L30A.A	Parcelrack	560898	male
CP2	Passenger_Area	561782	male	L30B.A	Parcelrack	560898	male
CP2	Passenger_Area	561781	female	L31	Parcelrack	560898	male
CP3	Passengersarea	561782	male	L32	Parcelrack	560898	male
CP3	Passengersarea	561781	female	L33	Parcelrack	560898	male
CP4	Passenger_Area	561782	male	L34	Parcelrack	560898	male
CP4	Passenger_Area	561781	female	L35	Parcelrack	560898	male
CP5	Passenger_Area	561782	male	L36	Parcelrack	560898	male
CP5	Passenger_Area	561781	female	L37	Parcelrack	560898	male
CPA17B	RJB	562337	male	L38	Parcelrack	560898	male
CPA17B	RJB	562338	female	L39	Parcelrack	560898	male
CSo53	Rear_axle_cmpt.	561690	male	L40	Parcelrack	560898	male
CSo53	Rear_axle_cmpt.	561566	female	L41	Parcelrack	560898	male
CSw102	Rear_vehicule	562549	male	L42	Parcelrack	560898	male
CSw102	Rear_vehicule	562550	female	L43	Parcelrack	560898	male
CSX1	Engine_Cmpt	563135	male	L44	Parcelrack	560898	male
CSX1	Engine_Cmpt	563134	female	L45	Parcelrack	560898	male
CSX3	Engine_Cmpt	563135	male	L46	Parcelrack	560898	male
CSX3	Engine_Cmpt	563134	female	L47	Parcelrack	560898	male
CT_IN	Rear_Vehicle	560167	male	L48	Parcelrack	560898	male
CT_IN	Rear_Vehicle	560159	female	L49	Parcelrack	560898	male
CT_IN2	Engine_Cmpt	560167	male	L50	Parcelrack	560898	male
CT_IN2	Engine_Cmpt	560159	female	L51	Parcelrack	560898	male
CT_Out	Rear_Vehicle	560233	female	L52	Parcelrack	560898	male
EI	Enginecmpt.	563739	male	L52	Parcelrack	560900	female
L1A	Engine_Cmpt	560774	male	L52A	Parcelrack	560898	male
L16.A	Frontroof	562615	female	L53	Parcelrack	560898	male
L16.B	Frontroof	562615	female	L53	Parcelrack	560900	female
L17.A	Frontroof	562615	female	L53A	Parcelrack	560898	male
L17.B	Frontroof	562615	female	L54	Parcelrack	560898	male
L18	Entrance_Door	562549	male	L54	Parcelrack	560900	female
L19	Entracedoor	562486	female	L54A	Parcelrack	560898	male
L20	Entracedoorstep	562486	female	L55	Parcelrack	560898	male
L21	Upper_front	562486	female	L55	Parcelrack	560900	female
L22	Upper_front	562486	female	L55A	Parcelrack	560898	male
L23	Upper_front	562486	female	L56	Parcelrack	560898	male
L24	Upper_front	562486	female	L56	Parcelrack	560900	female
L25	Upper_front	562486	female	L56A	Parcelrack	560898	male
L26	Upper_front	562486	female	L57	Parcelrack	560898	male
L27	Upper_front	562486	female	L57	Parcelrack	560900	female
L28	Parcelrack	560898	male	L57A	Parcelrack	560898	male

CONNECTORS LIST

No	Location	Part #	Gender	No	Location	Part #	Gender
L58	Parcelrack	560898	male	L144	Parcelrack	561186	male
L58	Parcelrack	560900	female	L145	Parcelrack	561186	male
L58A	Parcelrack	560898	male	L146	Parcelrack	561186	male
L63	Front_Side_LH	562155	male	L147	Parcelrack	561186	male
L64	Outside_Front_RH	562155	male	L148	Parcelrack	561186	male
L64X	Aisle_Section	560898	male	L149	Parcelrack	561186	male
L65	Outside_Front_LH	562155	male	L150	Parcelrack	561186	male
L66	Out_Side_Front_LH	562155	male	L151	Parcelrack	561186	male
L67	4th_Lugg_Cmpt	562155	male	L152	Parcelrack	561186	male
L68	4th_Lugg_Cmpt	562155	male	L153	Parcelrack	561186	male
L69	4th_Lugg_Cmpt	562155	male	L154	Parcelrack	561186	male
L70	4th_Lugg_Cmpt	562155	male	L155	Parcelrack	561186	male
L72	Rear_Vehicle	562155	male	L156	Parcelrack	561186	male
L74	Rear_Vehicle	562155	male	L157	Parcelrack	561186	male
L75	Rearenginedoor	562155	male	L158	Parcelrack	561186	male
L76	Rear_engine_door	562155	male	L173	Parcelrack	563590	female
L81.A	Rear_Vehicle	562835	female	L174A	Parcelrack	563590	female
L81.B	Rear_Vehicle	562834	male	L175	Engine_Cmpt.	563590	female
L82A	Rearvehicule	562348	female	L176	5th_Lugg_Cmpt	561247	male
L83A	Rearvehicule	562348	female	L177	5th_Lugg_Cmpt	561247	male
L84	Rear_roof	562486	female	L178	3rd_Lugg_Cmpt	561247	male
L85	Rear_roof	562486	female	L179	3rd_Lugg_Cmpt	561247	male
L86	Rear_roof	562486	female	L180	2nd_Lugg_Cmpt	561247	male
L87	Rear_roof	562486	female	L181	2nd_Lugg_Cmpt	561247	male
L88	Rear_roof	562486	female	L182	1st_Lugg_Cmpt	561247	male
L89	Rear_roof	562486	female	L183	1st_Lugg_Cmpt	561247	male
L90	Rear_roof	562486	female	L184	Servicecmpt.	561247	male
L93.A	Engine_Cmpt.	563069	female	L185.A	Servicecmpt.	561539	male
L93.B	Engine_Cmpt.	563069	female	L185.B	Servicecmpt.	561539	male
L94.A	Engine_Cmpt.	563069	female	L186.A	Dash	561539	male
L94.B	Engine_Cmpt.	563069	female	L186.B	Dash	561539	male
L95	Outside_Front_LH	562485	male	L187	Engine_Cmpt	561690	male
L95A	Outside_Front_LH	562485	male	L188	Service_Cmpt	562486	female
L96	Outside_Front_RH	562485	male	L193.A	Dash	560488	female
L96A	Outside_Front_RH	562485	male	L193.B	Dash	560488	female
L97.A	Outside_Front_LH	563069	female	L194.A	Dash	562019	female
L97.B	Outside_Front_LH	563069	female	L194.B	Dash	560488	female
L98.A	Entrance_Door	563069	female	L195.A	Dash	560488	female
L98.B	Outside_Front_RH	563069	female	L195.B	Dash	560488	female
L140	Lavatory	561247	male	L199	Enginecmpt.	562848	male
L141	Upper_front	561247	male	L201	Upper_front	561247	male
L142	Lavatory	562006	male	L202	Upper_front	561247	male
L143	Parcel_rack	561186	male	L203	RH_Console	561690	male

CONNECTORS LIST

No	Location	Part #	Gender	No	Location	Part #	Gender
L204	Parcel_Rack_RH	562803	male	L604	Luggage_Cmpt	562155	male
L205	Enginecmpt.	562485	male	L605	Luggage_Cmpt	562155	male
L206	Parcel_Rack_RH	562803	male	L606	Luggage_Cmpt	562155	male
L211	Entrace_Door_step	562486	female	L607	Luggage_Cmpt	562155	male
L243	Parcelrack	561186	male	L634	Aisle_Section	560898	male
L244	Parcelrack	561186	male	L635	Aisle_Section	560898	male
L245	Parcelrack	561186	male	L650.A	Aisle_Section	560898	male
L246	Parcelrack	561186	male	L660_1	Rear_Galley	560898	male
L247	Parcel_rack	561186	male	L660_2	Rear_Galley	560898	male
L248	Parcelrack	561186	male	L660_3	Rear_Galley	560898	male
L249	Parcelrack	561186	male	L661.A	Rear_Galley	560081	female
L250	Parcel_rack	561186	male	L661.B	Rear_Galley	560081	female
L251	Parcel_rack	561186	male	Mic_Dri	Parcel_rack	560999	male
L252	Parcelrack	561186	male	Mic_Dri	Parcel_rack	560999	male
L253	Parcel_rack	561186	male	Mic_Dri	Parcel_rack	560999	male
L254	Parcelrack	561186	male	Mic_Gu	Parcel_rack	560999	male
L255	Parcel_rack	561186	male	Mic_Gu	Parcel_rack	560999	male
L256	Parcelrack	561186	male	Mic_Gu	Parcel_rack	560999	male
L257	Parcelrack	561186	male	Mo3	Dash	561667	female
L258	Parcel_rack	561186	male	Mo4	Dash	562076	male
L282	Engine_Cmpt	561690	male	Mo5	Upper_front	561550	male
L285.A	Rear_Vehicle	562835	female	Mo6	Front_vehicle	561690	male
L285.B	Rear_Vehicle	562834	male	Mo7	Cond_Cmpt	563691	male
L286.A	Rear_Vehicle	562835	female	Mo8	Cond_Cmpt	563691	male
L286.B	Rear_Vehicle	562834	male	Mo10	Parcel_rack	561515	male
L290	Engine_door	562565	female	Mo11	Parcel_rack	561515	male
L291	Engine_door	562565	female	Mo12	Engine_Cmpt	561690	male
L298A	Enginecmpt.	563590	female	Mo13	Engine_Cmpt	561690	female
L306	RJBcmpt.	561247	male	Mo14	Engine_Cmpt	561566	female
L309.	Rear_LH_Lugg	564576	male	Mo15	Front_Ceiling	560900	female
L309D.	Drivers_Area	564576	male	Mo16	Front_Ceiling	560900	female
L310.	Rear_LH_Lugg	564576	male	Mo17	RH_Console	563626	male
L310D.	Drivers_Area	564576	male	Mo18	Fr_Service_Door	562474	male
L314	Front_vehicle	562789	male	Mo19	Fr_Service_Door	562474	male
L315	Front_vehicle	562789	male	Mo20	Fr_Service_Door	562474	male
L319	Under_WCL_platform	561247	male	Mo21	Upper_front	561186	male
L350A.A	Rearaxlecmpt.	564552	male	Mo22	RH_Console	561186	male
L350A.B	Rearaxlecmpt.	563340	male	Mo24	RH_Console	562348	female
L350A.C	Rearaxlecmpt.	562251	male	Mo25	RH_Console	562348	female
L600	Luggage_Cmpt	562155	male	Mo27	Cond_Cmpt	563691	male
L601	Luggage_Cmpt	562155	male	Mo28	Cond_Cmpt	563691	male
L602	Luggage_Cmpt	562155	male	Mo54	Service_Cmpt	562474	male
L603	Luggage_Cmpt	562155	male	Mo61	Parcel_rack	561248	female

CONNECTORS LIST

No	Location	Part #	Gender	No	Location	Part #	Gender
Mo62	FrontHatch	562486	female	R36	Dash	564496	male
Mo63	RearHatch	562486	female	R37	Dash	564496	male
Mo65	Enginecmpt.	568089	male	R38	FJB	564496	male
Mo67	Enginecmpt.	568089	male	R40	RJB	564496	male
Mo68	Enginecmpt.	568089	male	R47	Parcelrack	564496	male
Mo69	Enginecmpt.	568089	male	R72	5th_Bay	563409	male
Mo70	Enginecmpt.	568089	male	R73	5th_Bay	563409	male
Mo71	Enginecmpt.	568089	male	R_12VISS	Parcel_rack	564496	male
Mo72	Enginecmpt.	568089	male	RadioVolv	Parcel_rack	563960	male
Mo73	Enginecmpt.	568089	male	RadioVolv	Parcel_rack	563962	male
PC1	FJB	562650	male	RadioVolv	Parcel_rack	563956	male
PC1	FJB	562649	female	RadioVolv	Parcel_rack	563957	male
PF	FJB	561782	male	RadioVolv	Parcel_rack	563958	male
PF	FJB	561781	female	RadioVolv	Parcel_rack	563960	male
PF1	Passenger_Area	561782	male	RadioVolv	Parcel_rack	563962	male
PF1	Passenger_Area	561781	female	RadioVolv	Parcel_rack	563956	male
PF1A	Passenger_Area	561782	male	RadioVolv	Parcel_rack	563957	male
PF1A	Passenger_Area	561781	female	RadioVolv	Parcel_rack	563958	male
Pot1.A	Dash	560488	female	RadioVolv	Parcel_rack	563960	male
Pot1.B	Dash	560488	female	RadioVolv	Parcel_rack	563962	male
Pot1.C	Dash	560488	female	RadioVolv	Parcel_rack	563956	male
Pot2	Dash	561550	male	RadioVolv	Parcel_rack	563957	male
PR	Parcelrack	561782	male	RadioVolv	Parcel_rack	563958	male
PR	Parcelrack	561781	female	Res3.A	ParcelRack	563590	female
PR1	Passenger_Area	561782	male	Res4	RH_Console	563590	female
PR1	Passenger_Area	561781	female	Res6	FJB	563590	female
PR1A	Passenger_Area	561782	male	Res6A	FJB	563589	male
PR1A	Passenger_Area	561781	female	Res6A	FJB	563590	female
R1	RJB	562486	female	Res6B	FJB	563589	male
R3	RJB	563409	male	Res6B	FJB	563590	female
R4	FJB	564496	male	Res7	dash	563590	female
R5	RJB	564496	male	Res15	Engine_Cmpt	561782	male
R12	Evap_Cmpt	563409	male	Res31	Ureacmpt.	562350	male
R20	RJB	564496	male	Res32	Ureacmpt.	563764	female
R21	FJB	560525	male	Res46	FJB	563590	female
R23A	FJB	564496	male	Res53	dash	563590	female
R26	Evap_Cmpt	564496	male	Res99	dash	563590	female
R27	Dash	564496	male	Se2	Service_Cmpt	561566	female
R28	FJB	564496	male	Se4	Window_RH	561477	female
R29	RJB	563409	male	Se5	Window_RH	561477	female
R30	FJB	564496	male	Se6	Window_RH	561477	female
R31	FJB	564496	male	Se7	Window_LH	561477	female
R34	RJB	564210	male	Se8	Window_LH	561477	female

CONNECTORS LIST

No	Location	Part #	Gender	No	Location	Part #	Gender
Se9	Window_LH	561477	female	Se65	Dash	564042	female
Se10	FJB	561477	female	Se66	FJB	564039	female
Se11.A	Cond_Cmpt	560082	female	Se67	Frontaxlecmpt.	563159	female
Se11.B	Cond_Cmpt	560082	female	Se69	Frontaxlecmpt.	563159	female
Se11.C	Cond_Cmpt	560082	female	Se74	Rear_Axle_Cmpt	563340	male
Se13	Engine_Cmpt	562350	male	Se79	Front_Axle	563340	male
Se14.A	Driver_Area	561782	male	Se89	EngineCmpt	562350	male
Se14.B	Driver_Area	561781	female	Se94	WCLdoor	562877	female
Se15	RH_Console	560898	male	Se100	WCLdoor	562479	female
Se17	Entrace_Door	560081	female	shell1_1618	Driver_Area	562471	male
Se18	Servicecmpt.	561566	female	So3	RH_Console	641385	male
Se19_P	Service_Cmpt	563677	male	So4	RH_Console	641385	male
Se19_S	Service_Cmpt	563677	male	So5	RH_Console	641385	male
Se20	Evap_Cmpt	562426	male	So6	RH_Console	641385	male
Se21	Dash	561248	female	So7	Service_Cmpt	561566	female
Se23	Engine_Cmpt	563159	male	So8	Servicecmpt.	641385	male
Se24	Evap_Cmpt	563758	female	So9	Enginecmpt.	560016	female
Se25	Passenger_Area	561248	female	So10	Cond_Cmpt	562485	male
Se28	Pneumatic_plate	561690	male	So11	Cond_Cmpt	561566	female
Se29	Engine_Cmpt	561566	female	So13	Evap_Cmpt	563204	female
Se30	Enginedoor	562877	female	So14	Servicecmpt.	641385	male
Se31	Enginedoor	562877	female	So15	Servicecmpt.	641385	male
Se32	Rear_Axle_Cmpt	562426	male	So16	Servicecmpt.	641385	male
Se33	Rear_Axle_Cmpt	562856	male	So17	Servicecmpt.	562848	male
Se34	Rear_Axle_Cmpt	562426	male	So18	Pneumatic_plate	641385	male
Se35	Rear_Axle_Cmpt	562426	male	So19	Pneumatic_plate	641385	male
Se36	Rear_Axle_Cmpt	562427	male	So20	Servicecmpt.	641385	male
Se37	Front_Axle_LH	641132	female	So21	Front_Axle_Cmpt	564046	female
Se38	Front_Axle_RH	641132	female	So22	Front_Axle_Cmpt	564046	female
Se39	Rear_Axle_LH	641132	female	So23	Rear_Axle_Cmpt	564046	female
Se40	Rear_Axle_LH	641132	female	So24	Rear_Axle_Cmpt	564046	female
Se41	Condensor_cmpt.	562877	female	So27	Rearaxlecmpt.	564045	female
Se45	Servicecmpt.	563409	male	So50	Rearaxlecmpt.	564046	female
Se46	Rearaxlecmpt.	562348	female	So52	Rearaxlecmpt.	564045	female
Se49	Engine_Cmpt	561690	male	So54	Enginecmpt.	564045	female
Se51	Driverseat	563589	male	spBar4	Enginecmpt.	564135	male
Se53	Service_Cmpt	563159	female	spBar5	Enginecmpt.	564135	male
Se54	Service_Cmpt	563159	female	spBar6	Enginecmpt.	564135	male
Se55	Service_Cmpt	563159	female	spBar7	Enginecmpt.	564135	male
Se56	WCLdoor	562479	female	spBar11	Engine_Cmpt.	564135	male
Se60	Service_Cmpt	563409	male	spBar12	Engine_Cmpt.	564135	male
Se63	Rearaxlecmpt.	641132	female	spBar13	Enginecmpt.	564135	male
Se64	Rearaxlecmpt.	641132	female	spBar14	Enginecmpt.	564135	male

CONNECTORS LIST

No	Location	Part #	Gender	No	Location	Part #	Gender
spBar15	Enginecmpt.	564135	male	Sub2.A	Passenger_Area	564004	female
spBar16	Enginecmpt.	564135	male	Sw1.C258	Driver_Area	561188	female
spBar19	Condensorcmpt.	564135	male	Sw1.C259	Driver_Area	561186	male
spBar20	Condensorcmpt.	564135	male	Sw2	Dash	562763	male
spBar21	Condensorcmpt.	564135	male	Sw3	Dash	562763	male
spBar22	Enginecmpt.	564135	male	Sw4	Dash	562763	male
spBar23	Enginecmpt.	564135	male	Sw5	Dash	562763	male
spBar24	Enginecmpt.	564135	male	Sw6	Dash	562763	male
Spk1_L	Parcel_Rack_LH	563994	male	Sw10A	LH_Console	562763	male
Spk1_R	Parcel_Rack_RH	563994	male	Sw12	Dash	562763	male
Spk2_L	Parcel_Rack_LH	563994	male	Sw14	Dash	562763	male
Spk2_R	Parcel_Rack_RH	563994	male	Sw16	Dash	562763	male
Spk3_L	Parcel_Rack_LH	563994	male	Sw17	Dash	562763	male
Spk3_R	Parcel_Rack_RH	563994	male	Sw18A	LH_Console	562763	male
Spk4_L	Parcel_Rack_LH	563994	male	Sw20	Dash	562763	male
Spk4_R	Parcel_Rack_RH	563994	male	Sw21	Dash	562763	male
Spk5_L	Parcel_Rack_LH	563994	male	Sw24	Dash	562763	male
Spk5_R	Parcel_Rack_RH	563994	male	Sw25	Dash	562763	male
Spk6_L	Parcel_Rack_LH	563994	male	Sw26	Dash	562763	male
Spk6_R	Parcel_Rack_RH	563994	male	Sw27	Dash	562763	male
Spk7_L	Parcel_Rack_LH	563994	male	Sw29	Dash	562763	male
Spk7_R	Parcel_Rack_RH	563994	male	Sw30	RJB	563135	male
Spk8_L	Parcel_Rack_LH	563994	male	Sw32	Dash	561477	female
Spk8_R	Parcel_Rack_RH	563994	male	Sw33	Dash	561476	male
Spk9_L	Parcel_Rack_LH	563994	male	Sw34	Outside_Front_RH	562477	male
Spk9_R	Parcel_Rack_RH	563994	male	Sw35	Console	562763	male
Spk10_L	Parcel_Rack_LH	563994	male	Sw38	LH_Console	562763	male
Spk10_R	Parcel_Rack_RH	563994	male	Sw39.A	RJB	562403	female
Spk11_L	Parcel_Rack_LH	563994	male	Sw39.B	RJB	562403	female
Spk11_R	Parcel_Rack_RH	563994	male	Sw40	LH_Console	561690	male
Spk12_L	Parcel_Rack_LH	563994	male	Sw41	LH_Console	562749	male
Spk12_R	Parcel_Rack_RH	563994	male	Sw42	Lugg_Cmpt	561636	female
Spk13_L	Parcel_Rack_LH	563994	male	Sw43	LH_Console	561690	male
Spk13_R	Parcel_Rack_RH	563994	male	Sw44.A	FJB	562403	female
Spk14_L	Parcel_Rack_LH	563994	male	Sw44.B	FJB	562403	female
Spk14_R	Parcel_Rack_RH	563994	male	Sw45.A	5th_Lugg_Cmpt	562485	male
Spk15_L	Parcel_Rack_LH	563994	male	Sw45.B	5th_Lugg_Cmpt	562486	female
Spk15_R	Parcel_Rack_RH	563994	male	Sw46.A	5th_Lugg_Cmpt	562485	male
Spk16_L	Parcel_Rack_LH	563994	male	Sw46.B	5th_Lugg_Cmpt	562486	female
Spk16_R	Parcel_Rack_RH	563994	male	Sw47.A	3rd_Lugg_Cmpt	562485	male
SpkDr_L	Parcel_Rack_LH	563994	male	Sw47.B	3rd_Lugg_Cmpt	562486	female
SpkDr_R	Parcel_Rack_RH	563994	male	Sw48.A	3rd_Lugg_Cmpt	562485	male
Sub1.A	Passenger_Area	564004	female	Sw48.B	3rd_Lugg_Cmpt	562486	female

CONNECTORS LIST

No	Location	Part #	Gender	No	Location	Part #	Gender
Sw49.A	2nd_Lugg_Cmpt	562485	male	Sw156	LH_Console	562763	male
Sw49.B	2nd_Lugg_Cmpt	562486	female	Sw157	Dash	562763	male
Sw50.A	2nd_Lugg_Cmpt	562485	male	Sw158	Dash	562763	male
Sw50.B	2nd_Lugg_Cmpt	562486	female	Sw629	Dash	562763	male
Sw51.A	1st_Lugg_Cmpt	562485	male	Sw660	Rear_Galley	562763	male
Sw51.B	1st_Lugg_Cmpt	562486	female	Sw661	Rear_Galley	562763	male
Sw52.A	1st_Lugg_Cmpt	562485	male	Sw662	Dash	562763	male
Sw52.B	1st_Lugg_Cmpt	562486	female	Sw663	Rear_Galley	562763	male
Sw55.A	Lavatory	560488	female	Sw670	dash	562763	male
Sw55.B	Lavatory	560488	female	sym698_166.	Parcel_rack	564489	female
Sw56.A	Lavatory	560488	female	sym698_166.	Parcel_rack	562706	female
Sw56.B	Lavatory	560488	female	sym698_166.	Parcel_rack	562706	female
Sw58	Engine_Cmpt.	563135	male	sym699_166.	Parcel_rack	564489	female
Sw59	Enginecmpt.	563135	male	sym699_166.	Parcel_rack	562706	female
Sw63A	LHConsole	562763	male	sym699_166.	Parcel_rack	562706	female
Sw64.A	Service_Cmpt	560815	female	sym700_166.	Parcel_rack	564489	female
Sw64.B	Service_Cmpt	560815	female	sym700_166.	Parcel_rack	562706	female
Sw82	RJB	563135	male	sym700_166.	Parcel_rack	562706	female
Sw83.A	Dash	560082	female	sym812_291.	Parcelrack	565180	female
Sw83.B	Dash	560815	female	tab69	Parcelrack	561626	N/A
Sw83.C	Dash	560082	female	Tab70a	Parcelrack	561626	N/A
Sw83.D	Dash	560815	female	Tab70b	Parcelrack	561626	N/A
Sw85	LH_Console	562749	male	tab71a	Parcelrack	561626	N/A
Sw95.A	WCLdoor	562615	female	TermL150	Parcel_rack	562505	N/A
Sw95.B	WCLdoor	562615	female	TermL248	Parcel_rack	562505	N/A
Sw95.C	WCLdoor	562615	female	VECF1	FJB	563186	male
Sw96.A	WCL_Door	562615	female	VECF2	FJB	563183	male
Sw96.B	WCL_Door	562615	female	VECF3	FJB	563185	male
Sw96.C	WCLdoor	562615	female	VECF4	FJB	563182	male
Sw97.A	WCLsystem	562615	female	VECF9	FJB	563448	male
Sw97.B	WCLsystem	562615	female	VECF10	FJB	563181	male
Sw97.C	WCLsystem	562615	female	VECF11	FJB	563184	male
Sw98.A	WCLsystem	562615	female	VECF12	FJB	563187	male
Sw98.B	WCLsystem	562615	female	VECR1	RJB	563186	male
Sw98.C	WCLsystem	562615	female	VECR2	RJB	563183	male
Sw100	dash	562763	male	VECR3	RJB	563185	male
Sw107	dash	562763	male	VECR4	RJB	563182	male
Sw108	dash	562763	male	VECR4.	RJB	563182	male
Sw124	DashBoard	562763	male	VECR9	RJB	563448	male
Sw125.A	Service_Cmpt	561457	female	VECR10	RJB	563181	male
Sw125.B	Service_Cmpt	561457	female	VECR11	RJB	563184	male
Sw137	Dash	562763	male	VECR12	RJB	563187	male
Sw149	Dash	562763	male	VECT3	Rear_vehicule	563718	male

CONNECTORS LIST

No	Location	Part #	Gender	No	Location	Part #	Gender
VECT4	Rear_vehicule	563714	male				
Y80	Engine_Cmpt	563789	male				
Y81	Cond_Cmpt	563793	male				

CONNECTORS LIST

No	Location	Part #	Gender	No	Location	Part #	Gender
24SS_OP	Parcel_Rack_LH	563071	male	A34.K	Enginecmpt.	564270	male
24SS_OP	Parcel_Rack_LH	563040	female	A34.L	Enginecmpt.	564269	male
24SS_OP_2	Parcel_Rack_LH	563071	male	A36.JA	FJB	562767	male
24SS_OP_2	Parcel_Rack_LH	563040	female	A36.JB	FJB	562765	male
120V_inlet	Rearvehicule	561572	male	A36.JC	FJB	562957	male
A1	RJB	563975	male	A39.P101	Parcel_Rack_LH	563201	male
A2	FJB	563984	male	A39.P901	Parcel_Rack_LH	563953	male
A3	Dash	562363	male	A41.J1	FJB	563679	male
A4.A	Service_Cmpt	562428	female	A41.J2	FJB	564037	male
A4.B	Service_Cmpt	561188	female	A41.J3	FJB	564004	male
A5	Service_Cmpt	562428	female	A60.A	Parcel_Rack_LH	563071	male
A6	Engine_Cmpt	562427	male	A60.B	Parcel_Rack_LH	562706	female
A7	Rear_Axle_Cmpt	563979	male	A60.C	Parcel_Rack_LH	901110	male
A9.Cx1	FJB	564041	female	A60.D	Parcel_Rack_LH	901110	male
A9.Cx2	FJB	563678	male	A61.A	Parcel_Rack_LH	562464	male
A9.Cx3	FJB	564037	female	A61.B	Parcel_Rack_LH	562465	male
A9.Cx4	FJB	564038	female	A65.A	Parcel_Rack_LH	563025	male
A10.X1	Engine_Cmpt	563135	male	A65.B4	Parcel_Rack_LH	bidon	male
A10.X3	Engine_Cmpt	563134	female	A65.B5	Parcel_Rack_LH	bidon	male
A11	LH_Console	563142	male	A65.B6	Parcel_Rack_LH	bidon	male
A14.A	Dash	562766	male	A65.D	Parcel_Rack_LH	bidon	male
A14.B	Dash	562767	male	A65.E	Parcelrack	563071	male
A14.C	Dash	562765	male	A65.G1	Parcel_Rack_LH	563071	male
A15	Dash	562464	male	A65.G2	Parcel_Rack_LH	563071	male
A17.D	RJB	561932	male	A65.G3	Parcel_Rack_LH	563071	male
A18.J1	FJB	562794	male	A65.H1	Parcel_Rack_LH	561716	female
A18.J2	FJB	562650	male	A65.H2	Parcel_Rack_LH	561716	female
A19	LH_Console	562878	female	A65.H3	Parcel_Rack_LH	561716	female
A20	Parcel_Rack_LH	561477	female	A65.J	Parcel_Rack_LH	562465	male
A24.A	RH_Console	561890	male	A69L.A	Parcel_Rack_LH	563025	male
A24.B	RH_Console	561566	female	A69L.B1	Parcel_Rack_LH	bidon	male
A24.C	RH_Console	561889	female	A69L.B2	Parcel_Rack_LH	bidon	male
A25	Parcel_Rack_LH	563025	male	A69L.B3	Parcel_Rack_LH	bidon	male
A26.P1	Enginecmpt.	562350	male	A69L.B4	Parcel_Rack_LH	bidon	male
A26.P2	Enginecmpt.	563322	female	A69L.C	Parcel_Rack_LH	bidon	male
A26.P4	Enginecmpt.	568088	male	A69R.A	Parcel_Rack_LH	563025	male
A27	Service_Cmpt	562929	male	A69R.B1	Parcel_Rack_LH	bidon	male
A28	Service_Cmpt	562928	male	A69R.B2	Parcel_Rack_LH	bidon	male
A29.	Dash	562464	male	A69R.B3	Parcel_Rack_LH	bidon	male
A29.	Dash	565871	female	A69R.B4	Parcel_Rack_LH	bidon	male
A33.A	Parcel_Rack_LH	563071	male	A69R.C	Parcel_Rack_LH	bidon	male
A33.B	Parcel_Rack_LH	562330	female	A70c	Parcel_Rack_LH	561540	female
A34.J	Enginecmpt.	568118	male	A77	Parcelrack	564547	male

CONNECTORS LIST

No	Location	Part #	Gender	No	Location	Part #	Gender
A78	Parcelrack	562583	female	A121.Vsa	Dash	563679	male
A79	Parcelrack	562583	female	A121.Vsb	Dash	563678	male
A80	Parcelrack	562479	female	A121.Vsc	Dash	564037	male
A81.JA	FJB	562767	male	A121.Vsd	Dash	564118	male
A81.JB	FJB	562765	male	A130	Driver_Area	563226	male
A81.JC	FJB	562957	male	A131.A	Engine_Cmpt	561782	male
A83	Parcelrack	565970	female	A131.B	Engine_Cmpt	561781	female
A95.A	Parcelrack	564489	female	A137A	Condensercmpt.	20429843	male
A95.B	Parcelrack	562706	female	A138	Cond_Cmpt	563787	male
A95.C	Parcelrack	562706	female	A139	Dash	564501	male
A96.A	FJB	564205	male	A150	Parcelrack	21280133	male
A96S	FJB	564073	female	A152.A	Parcelrack	561550	male
A97	Dash	563226	male	A152.B	Parcelrack	563071	male
A97A	FJB	563226	male	A152.C	Parcelrack	563071	male
A97A	FJB	563613	female	A152.D	Parcelrack	563071	male
A97B	FJB	563226	male	A152.E	Parcelrack	563071	male
A97B	FJB	563613	female	A152.F	Parcelrack	563071	male
A97S.A1	Dash	564401	male	A152.G	Parcelrack	563071	male
A97S.A2	Dash	564402	male	A152.H	Parcelrack	563071	male
A97S.A3	Dash	564403	male	A152.I	Parcelrack	563071	male
A99	FJB	564205	male	A152.J	Parcelrack	563071	male
A100	Front_Axle_Cmpt	563758	female	A152.K	Parcelrack	562779	male
A100S	Front_Axle_Cmpt	563758	female	A152.L	Parcelrack	562779	male
A101	Rear_RH_Axle_Cmpt	563758	female	A162.A	FrontCab	561690	male
A101S	Rear_RH_Axle_Cmpt	563758	female	A162.B	FrontCab	561782	male
A102	Rear_RH_Axle_Cmpt	563758	female	A164.A	RH_trapezoidal_window	561690	male
A102S	Rear_RH_Axle_Cmpt	563758	female	A164.B	RH_trapezoidal_window	561782	male
A103	Dash	562070	female	A166	RearCab	561637	male
A107	EngineCmpt.	560336	male	A614.A	Parcelrack	561550	male
A108	RJB	562766	male	A614.C1	Parcelrack	563071	male
A109A	FJB	564141	male	A614.C2	Parcelrack	563071	male
A111	RJB	562550	female	A614.C3	Parcelrack	563071	male
A113.A	Parcel_Rack_LH	563960	male	A614.C4	Parcelrack	563071	male
A113.B	Parcel_Rack_LH	563962	male	A614.C5	Parcelrack	563071	male
A113.C1	Parcel_Rack_LH	563956	male	A614.C6	Parcelrack	563071	male
A113.C2	Parcel_Rack_LH	563957	male	A614.I/O	ParcelRack	bidon	male
A113.C3	Parcel_Rack_LH	563958	male	A614.P1	Parcelrack	562783	male
A114A	Dash	564252	male	A614.P2	Parcelrack	562783	male
A120.A	Dashboard	563960	male	A614.P3	Parcelrack	562783	male
A120.B	Dashboard	563962	male	AE41.J1	FJB	563679	male
A120.C1	Dashboard	563956	male	AE41.J2	FJB	564037	female
A120.C2	Dashboard	563957	male	AE41.J3	FJB	564004	male
A120.C3	Dashboard	563958	male	AE42.J1	FJB	563679	male

CONNECTORS LIST

No	Location	Part #	Gender	No	Location	Part #	Gender
AE42.J2	FJB	564037	female	AE53.J3	LH_ParcelRack	565957	male
AE42.J3	FJB	564004	male	AE54.J1	Evaporatorcmpt.	563679	male
AE43.J1	FJB	563679	male	AE54.J2	Evaporatorcmpt.	564037	female
AE43.J2	FJB	564037	male	AE54.J3	Evaporatorcmpt.	565957	male
AE43.J3	FJB	565957	male	AE55.J1	Dash	563679	male
AE44.J1	FJB	563679	male	AE55.J2	Dash	564037	female
AE44.J2	FJB	564037	female	AE55.J3	Dash	564004	male
AE44.J3	FJB	565957	male	AE56.J1	Dash	563679	male
AE45.J1	FJB	563679	male	AE56.J2	Dash	564037	male
AE45.J2	FJB	564037	female	AE56.J3	Dash	564004	male
AE45.J3	FJB	565957	male	AE57.J1	WCLcmpt.	563679	male
AE46.J1	FJB	563679	male	AE57.J2	WCLcmpt.	564037	male
AE46.J2	FJB	564037	female	AE57.J3	WCLcmpt.	564004	male
AE46.J3	FJB	565957	male	AltLL.A	Enginecmpt.	563746	female
AE47.J1	RH_console	563679	male	AltLL.B	Enginecmpt.	560815	female
AE47.J2	RH_console	564037	female	AltLL.C	Enginecmpt.	564469	female
AE47.J3	RH_console	565957	male	AltLR.A	enginecmpt.	563746	female
AE48.J1	RH_console	563679	male	AltLR.B	Enginecmpt.	560815	female
AE48.J2	RH_console	564037	female	AltLR.C	Enginecmpt.	564469	female
AE48.J3	RH_console	565957	male	AltUR.A	Enginecmpt.	563746	female
AE49..J1	RJB	563679	male	AltUR.B	Enginecmpt.	560815	female
AE49..J2	RJB	564037	male	AltUR.C	Enginecmpt.	564469	female
AE49..J3	RJB	565957	male	B85	Engine_Cmpt	563815	male
AE49.J1	RJB	563679	male	B96	Engine_Cmpt	563821	male
AE49.J2	RJB	564037	male	B96B	Engine_Cmpt	563823	male
AE49.J3	RJB	565957	male	B97	Engine_Cmpt	563816	male
AE50..J1	RJB	563679	male	B98	Engine_Cmpt	563817	male
AE50..J2	RJB	564037	male	B99	Engine_Cmpt	563815	male
AE50..J3	RJB	565957	male	B115A	Enginecmpt.	564226	male
AE50.J1	RJB	563679	male	B142C	Condensercmpt.	563793	male
AE50.J2	RJB	564037	male	B310	Enginecmpt.	565967	male
AE50.J3	RJB	565957	male	C1	FJB	563589	male
AE51.J1	RJB	563679	male	C1	FJB	563590	female
AE51.J2	RJB	564037	female	C1S	FJB	563589	male
AE51.J3	RJB	565957	male	C1S	FJB	563590	female
AE52..J1	RJB	563679	male	C2	Service_Cmpt	563580	male
AE52..J2	RJB	564037	male	C2	Service_Cmpt	563581	female
AE52..J3	RJB	565957	male	C2A	FJB	563580	male
AE52.J1	RJB	563679	male	C2A	FJB	563581	female
AE52.J2	RJB	564037	female	C2B	FJB	564034	male
AE52.J3	RJB	565957	male	C2B	FJB	564035	female
AE53.J1	LH_ParcelRack	563679	male	C3_plug	RJB	563589	male
AE53.J2	LH_ParcelRack	564037	female	C3_socket	RJB	563590	female

CONNECTORS LIST

No	Location	Part #	Gender	No	Location	Part #	Gender
C3AP	FJB	563589	male	C20A	Evap_Cmpt	562486	female
C3AP	FJB	563590	female	C20B	Evap_Cmpt	562485	male
C3AS	FJB	563589	male	C20B	Evap_Cmpt	562486	female
C3AS	FJB	563590	female	C23	Evaporatorcmpt.	564034	male
C3S	RJB	563593	male	C23	Evaporatorcmpt.	564035	female
C3S	RJB	563590	female	C24_plug	Evap_Cmpt	561690	male
C4	FJB	563580	male	C24_socket	Evap_Cmpt	561566	female
C4	FJB	563581	female	C25	Parcel_Rack_LH	561550	male
C5	FJB	563589	male	C25	Parcel_Rack_LH	561667	female
C5	FJB	563590	female	C26	Ureacmpt.	563226	male
C5S	FJB	563589	male	C26	Ureacmpt.	563613	female
C5S	FJB	563590	female	C26A	Ureacmpt.	568110	male
C6	FJB	563582	male	C26A	Ureacmpt.	568109	female
C6	FJB	563583	female	C26B	Ureacmpt.	563227	male
C7	Service_Cmpt	562581	male	C26B	Ureacmpt.	563614	female
C7	Service_Cmpt	562583	female	C29	4rd_Lugg_Cmpt	563651	male
C8	FJB	563227	male	C29	3rd_Lugg_Cmpt	563652	female
C8	FJB	563614	female	C30	3rd_Lugg_Cmpt	561710	male
C9	RJB	561986	male	C30	3rd_Lugg_Cmpt	561709	female
C9	RJB	561987	female	C31W	Parcelrack	563227	male
C10	Engine_Cmpt	562581	male	C31W	Parcelrack	563614	female
C10	Engine_Cmpt	562583	female	C32	lavatory	561734	male
C11	Service_Cmpt	563580	male	C32	Lavatory	561735	female
C11	Service_Cmpt	563581	female	C32W	WCLcmpt.	561669	male
C12	Engine_Cmpt	562581	male	C32W	WCLcmpt.	561670	female
C12	Engine_Cmpt	562583	female	C33	WCLcmpt.	564034	male
C13_plug	RH_Console	563589	male	C33	WCLcmpt.	564035	female
C13_socket	RH_Console	563590	female	C34	RH_Console	561986	male
C13S	RH_Console	563589	male	C34	RH_Console	561987	female
C13S	RH_Console	563590	female	C36	FJB	561986	male
C14	WCLsystem	561550	male	C36	FJB	561987	female
C14	WCLsystem	561667	female	C37	Parcel_Rack_LH	562557	male
C15A	EvaporatorCmpt	568110	male	C37	Parcel_Rack_LH	562558	female
C15A	EvaporatorCmpt	568109	female	C37.	Parcel_Rack_LH	561734	male
C16	RJB	561577	male	C37.	Parcel_Rack_LH	561735	female
C16	RJB	561605	female	C38	Parcelrack	562555	male
C17	RJB	560195	male	C38	Parcelrack	562556	female
C17	RJB	560169	female	C38.	Parcelrack	561734	male
C18	FJB	561986	male	C38.	Parcelrack	561735	female
C18	FJB	561987	female	C39	Parcelrack	562503	male
C19	RJB	561986	male	C39	Parcelrack	562507	female
C19	RJB	561987	female	C39A	Firesuppressioncmpt.	561782	male
C20A	Evap_Cmpt	562485	male	C39A	Firesuppressioncmpt.	561781	female

CONNECTORS LIST

No	Location	Part #	Gender	No	Location	Part #	Gender
C40	Dash	562485	male	C72	FJB	561645	female
C40	Dash	562486	female	C74	FJB	561645	female
C41	RJB	561782	male	C74	FJB	561646	male
C41	RJB	561781	female	C87	Engine_Cmpt	562485	male
C44_plug	FJB	561577	male	C87	Engine_Cmpt	562486	female
C44_socket	FJB	561605	female	C88	WCL_Cmpt.	563226	male
C45	FJB	561643	male	C88	WCL_Cmpt.	563613	female
C45	FJB	561642	female	C90	RJB	563582	male
C46	3rdlugg.cmpt.	562549	male	C90	RJB	563583	female
C46	3rdlugg.cmpt.	562550	female	C91	RJB	562285	male
C47	FJB	565207	male	C91	RJB	562282	female
C48	RJB	565208	male	C94_plug	FJB	563589	male
C49	FJB	562005	male	C94_socket	FJB	563590	female
C49	FJB	561714	female	C96	FJB	561646	male
C50	RJB	568110	male	C96	FJB	561645	female
C50	RJB	568109	female	C97	FJB	561643	male
C54	Engine_Cmpt.	563226	male	C97	FJB	561642	female
C54	Engine_Cmpt.	563613	female	C99	Enginecmpt.	562581	male
C54A	Ureacmpt.	568110	male	C99	Enginecmpt.	562583	female
C54A	Ureacmpt.	568109	female	C100	Evaporatorcmpt.	562477	male
C54B	Engine_Cmpt.	562477	male	C100	Evaporatorcmpt.	562479	female
C54B	Engine_Cmpt.	562479	female	C100S	Evaporator_Cmpt.	562477	male
C55	Evap_Cmpt	561577	male	C100S	Evaporator_Cmpt.	562479	female
C55	Evap_Cmpt	561605	female	C101	Service_Cmpt	561690	male
C59	RJB	561643	male	C101	Service_Cmpt	561566	female
C59	RJB	561642	female	C103_plug	FJB	562485	male
C63	Entrace_Door	562581	male	C103_socket	FJB	562486	female
C63	Entrace_Door	562583	female	C105_plug	FJB	562581	male
C64	Engine_Cmpt.	568110	male	C105_socket	FJB	562583	female
C64	Engine_Cmpt.	568109	female	C106_plug	FJB	562581	male
C64X	Aisle_section	560898	male	C106_socket	FJB	562583	female
C64X	Aisle_section	560900	female	C107A	Enginecmpt.	562885	female
C66_plug	Evap_Cmpt	561577	male	C107A	Enginecmpt.	562884	female
C66_socket	Evap_Cmpt	561605	female	C107B	Enginecmpt.	562885	female
C67	Parcelrack	561734	male	C107B	Enginecmpt.	562884	female
C67	Parcelrack	561735	female	C107C	Enginecmpt.	562885	female
C69_plug	FJB	561690	male	C107C	Enginecmpt.	562884	female
C69_socket	FJB	561566	female	C108	Dash	562557	male
C70	FJB	562557	male	C108	dash	562558	female
C70	FJB	562558	female	C110	Dash	568110	male
C71	FJB	561646	male	C110	Dash	568109	female
C71	FJB	561645	female	C119A	Rear_engine_door	568110	male
C72	FJB	561646	male	C119A	Rear_engine_door	568109	female

CONNECTORS LIST

No	Location	Part #	Gender	No	Location	Part #	Gender
C124	DashBoard	562503	male	C206	Parcel_Rack_RH	562507	female
C124	DashBoard	562507	female	C207	Parcel_Rack_LH	562503	male
C131A	Engine_Cmpt	561782	male	C207	Parcel_Rack_LH	562507	female
C131A	Engine_Cmpt	561781	female	C213	Parcel_Rack_LH	561515	male
C131B	Engine_Cmpt	561782	male	C213	Parcel_Rack_LH	561552	female
C131B	Engine_Cmpt	561781	female	C222	FJB	562477	male
C144	RJB	560852	male	C222	FJB	562479	female
C144	RJB	560851	female	C223	FJB	563227	male
C152	Cond_Cmpt	561611	male	C223	FJB	563614	female
C152	Cond_Cmpt	561610	female	C224	FJB	561637	male
C162	FrontCab	561690	male	C224	FJB	561636	female
C162	FrontCab	561566	female	C225	FJB	562650	male
C164A	RH_Trapezoidal_Window	561690	male	C225	FJB	562649	female
C164A	RH_Trapezoidal_Window	561566	female	C226	FJB	562650	male
C164AA	RH_Trapezoidal_Window	561690	male	C226	FJB	562649	female
C164AA	RH_Trapezoidal_Window	561566	female	C226a_plug	FJB	562650	male
C164B	RH_Trapezoidal_Window	561782	male	C226a_socket	FJB	562649	female
C164B	RH_Trapezoidal_Window	561781	female	C266	Parcelrack	561782	male
C164BB	RH_Trapezoidal_Window	561782	male	C266	Parcelrack	561781	female
C164BB	RH_Trapezoidal_Window	561781	female	C267	Parcelrack	561782	male
C167	FJB	561577	male	C267	Parcelrack	561781	female
C167	FJB	561605	female	C279	Service_Cmpt	562477	male
C170	LH_Console	561637	male	C279	Service_Cmpt	562479	female
C170	LH_Console	561636	female	C279A	Service_Cmpt	562477	male
C171	LH_Console	561646	male	C279A	Service_Cmpt	562479	female
C171	LH_Console	561645	female	C284	Parcel_Rack	561782	male
C175	RJB	563226	male	C284	Parcel_Rack	561781	female
C175	RJB	563613	female	C284_1	Parcel_Rack	561782	male
C175.	RJB	563226	male	C284_1	Parcel_Rack	561781	female
C175.	RJB	563613	female	C284_2	Parcel_Rack	561782	male
C187	RJB	561577	male	C284_2	Parcel_Rack	561781	female
C187	RJB	561605	female	C284_3	Parcel_Rack	561782	male
C188	Evap_Cmpt	561577	male	C284_3	Parcel_Rack	561781	female
C188	Evap_Cmpt	561605	female	C284_4	Parcel_Rack	561782	male
C189	RJB	561986	male	C284_4	Parcel_Rack	561781	female
C189	RJB	561987	female	C284_5	Parcel_Rack	561782	male
C193_plug	RJB	563589	male	C284_5	Parcel_Rack	561781	female
C193_socket	RJB	563590	female	C284_6	Parcel_Rack	561782	male
C194	FJB	563589	male	C284_6	Parcel_Rack	561781	female
C194	FJB	563590	female	C298	Parcelrack	561782	male
C195	dash	563347	male	C298	Parcelrack	561781	female
C195	dash	560489	female	C333	Upper_front	561550	male
C206	Parcel_Rack_RH	562503	male	C333	Upper_front	561667	female

CONNECTORS LIST

No	Location	Part #	Gender	No	Location	Part #	Gender
C355	RJB	563582	male	C566	Parcelrack	562507	female
C355	RJB	565887	female	C567	Parcelrack	562503	male
C356	Parcelrack	561710	male	C567	Parcelrack	562507	female
C356	Parcelrack	561709	female	C574	Parcel_Rack_RH	562549	male
C356A	Parcelrack	561515	male	C574	Parcel_Rack_RH	562550	female
C356A	Parcelrack	561552	female	C575	Parcel_Rack_RH	562503	male
C357	Parcelrack	561847	male	C575	Parcel_Rack_RH	562507	female
C357	Parcelrack	561862	female	C576B	Parcel_Rack_RH	562006	male
C380A	Dash	564222	male	C576B	Parcel_Rack_RH	560908	female
C380A	Dash	564224	female	C576BB	Parcelrack	562006	male
C381	Parcel_Rack	561847	male	C576BB	Parcelrack	560908	female
C381	Parcel_Rack	561862	female	C577A	Parcel_Rack	562006	male
C382	Under_Seat	561580	male	C577A	Parcel_Rack	560908	female
C382	Under_Seat	561582	female	C577AA	Parcelrack	562006	male
C397	RJB	562285	male	C577AA	Parcelrack	560908	female
C397	RJB	562282	female	C578	Parcel_Rack_LH	562503	male
C397.	RJB	562285	male	C578	Parcel_Rack_LH	562507	female
C397.	RJB	562282	female	C579	Parcel_Rack_LH	562549	male
C430	LH_Console	562363	male	C579	Parcel_Rack_LH	562550	female
C430	LH_Console	561188	female	C582	FJB	561690	female
C452	Dash	561669	male	C582	FJB	561566	female
C452	Dash	561670	female	C600	Dash	563226	male
C463	Rearaxlecmpt	568112	male	C600	Dash	563613	female
C463	Rearaxlecmpt	568111	female	C600A_plug	Dash	563226	male
C464	FJB	564222	male	C600A_socket	Dash	563613	female
C464	FJB	564224	female	C600B	Dash	563226	male
C464A	Dash	564222	male	C600B	Dash	563613	female
C464A	Dash	564224	female	C601	LHRoofWinAjar	561476	male
C464B	FJB	564222	male	C601	LHRoofWinAjar	561477	female
C464B	FJB	564224	female	C602	RH_Roof_Win_Ajar	561476	male
C465	Parcelrack	562581	male	C602	RH_Roof_Win_Ajar	561477	female
C465	Parcelrack	562583	female	C603	RHRoofWinAjar	561476	male
C506	FJB	561687	male	C603	RHRoofWinAjar	561477	female
C506	FJB	561685	female	C614	Passenger_Area	563071	male
C542	Parcelrack	561550	male	C614	Passenger_Area	563040	female
C542	Parcelrack	561667	female	C615	Passenger_Area	563071	male
C558	Parcelrack	562503	male	C615	Passenger_Area	563040	female
C558	Parcelrack	562507	female	C617	Mirror_LH	563801	male
C564	Parcelrack	562503	male	C617	Mirror_LH	563800	female
C564	Parcelrack	562507	female	C618	Mirror_RH	563801	male
C564_Sp	Parcelrack	562503	male	C618	Mirror_RH	563800	female
C564_Sp	Parcelrack	562507	female	C621	Aisle_section	560898	male
C566	Parcelrack	562503	male	C621	Aisle_section	560900	female

CONNECTORS LIST

No	Location	Part #	Gender	No	Location	Part #	Gender
C624_plug	Rear_Galley	561690	male	C_ALT	Enginecmpt.	562583	female
C624_socket	Rear_Galley	561566	female	C_ALT3	Enginecmpt.	562477	male
C626	FJB	562485	male	C_ALT3	Enginecmpt.	562479	female
C626	FJB	562486	female	C_AUDIO_AUX	Parcel_Rack	562557	male
C629	DashBoard	561690	male	C_AUDIO_AUX	Parcel_Rack	562558	female
C629	DashBoard	561566	female	C_Audio_HDMI_L	Parcel_Rack	901062	male
C630	Parcel_Rack	561690	male	C_Audio_HDMI_L	Parcel_Rack	901283	female
C630	Parcel_Rack	561566	female	C_Audio_HDMI_R	Parcel_Rack	901062	male
C633	Aisle_section	560898	male	C_Audio_HDMI_R	Parcel_Rack	901283	female
C633	Aisle_section	560900	female	C_AUX	Parcelrack	563071	male
C634	Aisle_section	560898	male	C_AUX	Parcelrack	563040	female
C634	Aisle_section	560900	female	C_AUX_2	Parcelrack	563071	male
C636	Aisle_section	560898	male	C_AUX_2	Parcelrack	563040	female
C636	Aisle_section	560900	female	C_INV1	Parcelrack	562337	male
C645	Aisle_section	560898	male	C_INV1	Parcelrack	562338	male
C645	Aisle_section	560900	female	C_INV2	Parcelrack	562337	male
C660	Rear_Galley	562646	male	C_INV2	Parcelrack	562338	male
C660	Rear_Galley	562647	female	C_LineOut	Parcelrack	563962	male
C662	FJB	562477	male	C_LineOut	Parcelrack	564489	female
C662	FJB	562479	female	C_Mo9	Evap_Cmpt	561577	male
C700	FJB	561637	male	C_Mo9	Evap_Cmpt	561605	female
C700	FJB	561636	female	C_Mo9:2	Evap_Cmpt	561577	male
C710	Front_LH_ParcelRack	561637	male	C_Mo9:2	Evap_Cmpt	561605	female
C710	Front_LH_ParcelRack	561636	female	C_Se51	dash	563589	male
C752_plug	Parcel_Rack	901062	male	C_Se51	dash	563590	female
C752_socket	Parcel_Rack	901283	female	C_USB	Parcel_Rack	562069	male
C753_plug	Parcel_Rack	901062	male	C_USB	Parcel_Rack	562070	female
C753_socket	Parcel_Rack	901283	female	CCAN1	FJB	562650	male
C766	Parcelrack	561662	male	CCAN1	FJB	562649	female
C766	Parcelrack	561661	female	CCAN2	FJB	562650	male
C768	Parcel_Rack	901062	male	CCAN2	FJB	562649	female
C768	Parcel_Rack	901283	female	CCAN3	FJB	562650	male
C769	Parcel_Rack	901062	male	CCAN3	FJB	562649	female
C769	Parcel_Rack	901283	female	CCAN4	FJB	562650	male
C777	Dash	562477	male	CCAN4	FJB	562649	female
C777	Dash	562479	female	CCust	RJB	562477	male
C_A60DB	Parcel_Rack	563071	male	CCust	RJB	562479	female
C_A60DB	Parcel_Rack	563040	female	CCust.	RJB	562477	male
C_A69R	Parcel_Rack	563025	male	CCust.	RJB	562479	female
C_A97	Dash	563226	male	CFHPR1	Parcelrack	564560	male
C_A97	Dash	563613	female	CIND-1.A	Parcelrack	560908	female
C_ALT	Enginecmpt.	562581	male	CIND-1.B	Parcelrack	560908	female

CONNECTORS LIST

No	Location	Part #	Gender	No	Location	Part #	Gender
CIND-2.A	Parcelrack	560908	female	L20	Entracedoorstep	562486	female
CIND-2.B	Parcelrack	560908	female	L21	Upper_front	562486	female
CIND-11.A	Parcelrack	560908	female	L22	Upper_front	562486	female
CIND-11.B	Parcelrack	560908	female	L23	Upper_front	562486	female
CINDWC-1.A	Parcelrack	560908	female	L24	Upper_front	562486	female
CINDWC-1.B	Parcelrack	560908	female	L25	Upper_front	562486	female
CL1	FJB	562485	male	L26	Upper_front	562486	female
CL1	FJB	562486	female	L27	Upper_front	562486	female
CL58A	Aisle_Section	560898	male	L28	Parcelrack	560898	male
CL58A	Aisle_Section	560900	female	L29	Parcelrack	560898	male
CP1	Passenger_Area	561782	male	L30	Parcelrack	560898	male
CP1	Passenger_Area	561781	female	L30A.A	Parcelrack	560898	male
CP2	Passenger_Area	561782	male	L30B.A	Parcelrack	560898	male
CP2	Passenger_Area	561781	female	L31	Parcelrack	560898	male
CP3	Passengersarea	561782	male	L32	Parcelrack	560898	male
CP3	Passengersarea	561781	female	L33	Parcelrack	560898	male
CP4	Passenger_Area	561782	male	L34	Parcelrack	560898	male
CP4	Passenger_Area	561781	female	L35	Parcelrack	560898	male
CP5	Passenger_Area	561782	male	L36	Parcelrack	560898	male
CP5	Passenger_Area	561781	female	L37	Parcelrack	560898	male
CPA17B	RJB	562337	male	L38	Parcelrack	560898	male
CPA17B	RJB	562338	female	L39	Parcelrack	560898	male
CSo53	Rear_axle_cmpt.	561690	male	L40	Parcelrack	560898	male
CSo53	Rear_axle_cmpt.	561566	female	L41	Parcelrack	560898	male
CSw102	Rear_vehicule	562549	male	L42	Parcelrack	560898	male
CSw102	Rear_vehicule	562550	female	L43	Parcelrack	560898	male
CSX1	Engine_Cmpt	563135	male	L44	Parcelrack	560898	male
CSX1	Engine_Cmpt	563134	female	L45	Parcelrack	560898	male
CSX3	Engine_Cmpt	563135	male	L46	Parcelrack	560898	male
CSX3	Engine_Cmpt	563134	female	L47	Parcelrack	560898	male
CT_IN	Rear_Vehicle	560167	male	L48	Parcelrack	560898	male
CT_IN	Rear_Vehicle	560159	female	L49	Parcelrack	560898	male
CT_IN2	Engine_Cmpt	560167	male	L50	Parcelrack	560898	male
CT_IN2	Engine_Cmpt	560159	female	L51	Parcelrack	560898	male
CT_Out	Rear_Vehicle	560233	female	L52	Parcelrack	560898	male
EI	Enginecmpt.	563739	male	L52	Parcelrack	560900	female
L1A	Engine_Cmpt	560774	male	L52A	Parcelrack	560898	male
L16.A	Frontroof	562615	female	L53	Parcelrack	560898	male
L16.B	Frontroof	562615	female	L53	Parcelrack	560900	female
L17.A	Frontroof	562615	female	L53A	Parcelrack	560898	male
L17.B	Frontroof	562615	female	L54	Parcelrack	560898	male
L18	Entrance_Door	562549	male	L54	Parcelrack	560900	female
L19	Entracedoor	562486	female	L54A	Parcelrack	560898	male

CONNECTORS LIST

No	Location	Part #	Gender	No	Location	Part #	Gender
L55	Parcelrack	560898	male	L96A	Outside_Front_RH	562485	male
L55	Parcelrack	560900	female	L97.A	Outside_Front_LH	563069	female
L55A	Parcelrack	560898	male	L97.B	Outside_Front_LH	563069	female
L56	Parcelrack	560898	male	L98.A	Entrance_Door	563069	female
L56	Parcelrack	560900	female	L98.B	Outside_Front_RH	563069	female
L56A	Parcelrack	560898	male	L140	Lavatory	561247	male
L57	Parcelrack	560898	male	L141	Upper_front	561247	male
L57	Parcelrack	560900	female	L142	Lavatory	562006	male
L57A	Parcelrack	560898	male	L143	Parcel_rack	561186	male
L58	Parcelrack	560898	male	L144	Parcelrack	561186	male
L58	Parcelrack	560900	female	L145	Parcelrack	561186	male
L58A	Parcelrack	560898	male	L146	Parcelrack	561186	male
L63	Front_Side_LH	562155	male	L147	Parcelrack	561186	male
L64	Outside_Front_RH	562155	male	L148	Parcelrack	561186	male
L64X	Aisle_Section	560898	male	L149	Parcelrack	561186	male
L65	Outside_Front_LH	562155	male	L150	Parcelrack	561186	male
L66	Out_Side_Front_LH	562155	male	L151	Parcelrack	561186	male
L67	4th_Lugg_Cmpt	562155	male	L152	Parcelrack	561186	male
L68	4th_Lugg_Cmpt	562155	male	L153	Parcelrack	561186	male
L69	4th_Lugg_Cmpt	562155	male	L154	Parcelrack	561186	male
L70	4th_Lugg_Cmpt	562155	male	L155	Parcelrack	561186	male
L72	Rear_Vehicle	562155	male	L156	Parcelrack	561186	male
L74	Rear_Vehicle	562155	male	L157	Parcelrack	561186	male
L75	Rearenginedoor	562155	male	L158	Parcelrack	561186	male
L76	Rear_engine_door	562155	male	L173	Parcelrack	563590	female
L81.A	Rear_Vehicle	562835	female	L174A	Parcelrack	563590	female
L81.B	Rear_Vehicle	562834	male	L175	Engine_Cmpt.	563590	female
L82A	Rearvehicule	562348	female	L176	5th_Lugg_Cmpt	561247	male
L83A	Rearvehicule	562348	female	L177	5th_Lugg_Cmpt	561247	male
L84	Rear_roof	562486	female	L178	3rd_Lugg_Cmpt	561247	male
L85	Rear_roof	562486	female	L179	3rd_Lugg_Cmpt	561247	male
L86	Rear_roof	562486	female	L180	2nd_Lugg_Cmpt	561247	male
L87	Rear_roof	562486	female	L181	2nd_Lugg_Cmpt	561247	male
L88	Rear_roof	562486	female	L182	1st_Lugg_Cmpt	561247	male
L89	Rear_roof	562486	female	L183	1st_Lugg_Cmpt	561247	male
L90	Rear_roof	562486	female	L184	Servicecmpt.	561247	male
L93.A	Engine_Cmpt.	563069	female	L185.A	Servicecmpt.	561539	male
L93.B	Engine_Cmpt.	563069	female	L185.B	Servicecmpt.	561539	male
L94.A	Engine_Cmpt.	563069	female	L186.A	Dash	561539	male
L94.B	Engine_Cmpt.	563069	female	L186.B	Dash	561539	male
L95	Outside_Front_LH	562485	male	L187	Engine_Cmpt	561690	male
L95A	Outside_Front_LH	562485	male	L188	Service_Cmpt	562486	female
L96	Outside_Front_RH	562485	male	L193.A	Dash	560488	female

CONNECTORS LIST

No	Location	Part #	Gender	No	Location	Part #	Gender
L193.B	Dash	560488	female	L310.	Rear_LH_Lugg	564576	male
L194.A	Dash	562019	female	L310D.	Drivers_Area	564576	male
L194.B	Dash	560488	female	L314	Front_vehicle	562789	male
L195.A	Dash	560488	female	L315	Front_vehicle	562789	male
L195.B	Dash	560488	female	L319	Under_WCL_platform	561247	male
L199	Enginecmpt.	562848	male	L350A.A	Rearaxlecmpt.	564552	male
L201	Upper_front	561247	male	L350A.B	Rearaxlecmpt.	563340	male
L202	Upper_front	561247	male	L350A.C	Rearaxlecmpt.	562251	male
L203	RH_Console	561690	male	L600	Luggage_Cmpt	562155	male
L204	Parcel_Rack_RH	562803	male	L601	Luggage_Cmpt	562155	male
L205	Enginecmpt.	562485	male	L602	Luggage_Cmpt	562155	male
L206	Parcel_Rack_RH	562803	male	L603	Luggage_Cmpt	562155	male
L211	Entrace_Door_step	562486	female	L604	Luggage_Cmpt	562155	male
L212	outside_rear_LH_RH	563589	male	L605	Luggage_Cmpt	562155	male
L213	outside_rear_LH_RH	563589	male	L606	Luggage_Cmpt	562155	male
L214	outside_rear_LH_RH	563589	male	L607	Luggage_Cmpt	562155	male
L243	Parcelrack	561186	male	L634	Aisle_Section	560898	male
L244	Parcelrack	561186	male	L635	Aisle_Section	560898	male
L245	Parcelrack	561186	male	L650.A	Aisle_Section	560898	male
L246	Parcelrack	561186	male	L660_1	Rear_Galley	560898	male
L247	Parcel_rack	561186	male	L660_2	Rear_Galley	560898	male
L248	Parcelrack	561186	male	L660_3	Rear_Galley	560898	male
L249	Parcelrack	561186	male	L661.A	Rear_Galley	560081	female
L250	Parcel_rack	561186	male	L661.B	Rear_Galley	560081	female
L251	Parcel_rack	561186	male	Mic_Driver_1.A	Parcel_rack	560999	male
L252	Parcelrack	561186	male	Mic_Driver_2.A	Parcel_rack	560999	male
L253	Parcel_rack	561186	male	Mic_Driver_3.A	Parcel_rack	560999	male
L254	Parcelrack	561186	male	Mic_Guide_1.A	Parcel_rack	560999	male
L255	Parcel_rack	561186	male	Mic_Guide_2.A	Parcel_rack	560999	male
L256	Parcelrack	561186	male	Mic_Guide_3.A	Parcel_rack	560999	male
L257	Parcelrack	561186	male	Mo3	Dash	561667	female
L258	Parcel_rack	561186	male	Mo4	Dash	562076	male
L282	Engine_Cmpt	561690	male	Mo5	Upper_front	561550	male
L285.A	Rear_Vehicle	562835	female	Mo6	Front_vehicle	561690	male
L285.B	Rear_Vehicle	562834	male	Mo7	Cond_Cmpt	563691	male
L286.A	Rear_Vehicle	562835	female	Mo8	Cond_Cmpt	563691	male
L286.B	Rear_Vehicle	562834	male	Mo10	Parcel_rack	561515	male
L290	Engine_door	562565	female	Mo11	Parcel_rack	561515	male
L291	Engine_door	562565	female	Mo12	Engine_Cmpt	561690	male
L298A	Enginecmpt.	563590	female	Mo13	Engine_Cmpt	561690	female
L306	RJBcmpt.	561247	male	Mo14	Engine_Cmpt	561566	female
L309.	Rear_LH_Lugg	564576	male	Mo15	Front_Ceiling	560900	female
L309D.	Drivers_Area	564576	male	Mo16	Front_Ceiling	560900	female

CONNECTORS LIST

No	Location	Part #	Gender	No	Location	Part #	Gender
Mo17	RH_Console	563626	male	R12	Evap_Cmpt	563409	male
Mo18	Fr_Service_Door	562474	male	R16	RJB	564496	male
Mo19	Fr_Service_Door	562474	male	R20	RJB	564496	male
Mo20	Fr_Service_Door	562474	male	R21	FJB	560525	male
Mo21	Upper_front	561186	male	R23A	FJB	564496	male
Mo22	RH_Console	561186	male	R26	Evap_Cmpt	564496	male
Mo24	RH_Console	562348	female	R27	Dash	564496	male
Mo25	RH_Console	562348	female	R28	FJB	564496	male
Mo27	Cond_Cmpt	563691	male	R29	RJB	563409	male
Mo28	Cond_Cmpt	563691	male	R30	FJB	564496	male
Mo54	Service_Cmpt	562474	male	R31	FJB	564496	male
Mo61	Parcel_rack	561248	female	R34	RJB	564210	male
Mo62	FrontHatch	562486	female	R36	Dash	564496	male
Mo63	RearHatch	562486	female	R37	Dash	564496	male
Mo65	Enginecmpt.	568089	male	R38	FJB	564496	male
Mo67	Enginecmpt.	568089	male	R40	RJB	564496	male
Mo68	Enginecmpt.	568089	male	R47	Parcelrack	564496	male
Mo69	Enginecmpt.	568089	male	R72	5th_Bay	563409	male
Mo70	Enginecmpt.	568089	male	R73	5th_Bay	563409	male
Mo71	Enginecmpt.	568089	male	R_12VISS	Parcel_rack	564496	male
Mo72	Enginecmpt.	568089	male	RadioVolvo1_933.A	Parcel_rack	563960	male
Mo73	Enginecmpt.	568089	male	RadioVolvo1_933.B	Parcel_rack	563962	male
PC1	FJB	562650	male	RadioVolvo1_933.C1	Parcel_rack	563956	male
PC1	FJB	562649	female	RadioVolvo1_933.C2	Parcel_rack	563957	male
PF	FJB	561782	male	RadioVolvo1_933.C3	Parcel_rack	563958	male
PF	FJB	561781	female	RadioVolvo2_933.A	Parcel_rack	563960	male
PF1	Passenger_Area	561782	male	RadioVolvo2_933.B	Parcel_rack	563962	male
PF1	Passenger_Area	561781	female	RadioVolvo2_933.C1	Parcel_rack	563956	male
PF1A	Passenger_Area	561782	male	RadioVolvo2_933.C2	Parcel_rack	563957	male
PF1A	Passenger_Area	561781	female	RadioVolvo2_933.C3	Parcel_rack	563958	male
Pot1.A	Dash	560488	female	RadioVolvo3_933.A	Parcel_rack	563960	male
Pot1.B	Dash	560488	female	RadioVolvo3_933.B	Parcel_rack	563962	male
Pot1.C	Dash	560488	female	RadioVolvo3_933.C1	Parcel_rack	563956	male
Pot2	Dash	561550	male	RadioVolvo3_933.C2	Parcel_rack	563957	male
PR	Parcelrack	561782	male	RadioVolvo3_933.C3	Parcel_rack	563958	male
PR	Parcelrack	561781	female	Res3.A	ParcelRack	563590	female
PR1	Passenger_Area	561782	male	Res4	RH_Console	563590	female
PR1	Passenger_Area	561781	female	Res6	FJB	563590	female
PR1A	Passenger_Area	561782	male	Res6A	FJB	563589	male
PR1A	Passenger_Area	561781	female	Res6A	FJB	563590	female
R3	RJB	563409	male	Res6B	FJB	563589	male
R4	FJB	564496	male	Res6B	FJB	563590	female
R5	RJB	564496	male	Res7	dash	563590	female

CONNECTORS LIST

No	Location	Part #	Gender	No	Location	Part #	Gender
Res15	Engine_Cmpt	561782	male	Se41	Condensor_cmpt.	562877	female
Res31	Ureacmpt.	562350	male	Se45	Servicecmpt.	563409	male
Res32	Ureacmpt.	563764	female	Se46	Rearaxlecmpt.	562348	female
Res46	FJB	563590	female	Se49	Engine_Cmpt	561690	male
Res53	dash	563590	female	Se51	Driverseat	563589	male
Res99	dash	563590	female	Se53	Service_Cmpt	563159	female
Se2	Service_Cmpt	561566	female	Se54	Service_Cmpt	563159	female
Se4	Window_RH	561477	female	Se55	Service_Cmpt	563159	female
Se5	Window_RH	561477	female	Se56	WCLdoor	562479	female
Se6	Window_RH	561477	female	Se60	Service_Cmpt	563409	male
Se7	Window_LH	561477	female	Se63	Rearaxlecmpt.	641132	female
Se8	Window_LH	561477	female	Se64	Rearaxlecmpt.	641132	female
Se9	Window_LH	561477	female	Se65	Dash	564042	female
Se10	FJB	561477	female	Se66	FJB	564039	female
Se11.A	Cond_Cmpt	560082	female	Se67	Frontaxlecmpt.	563159	female
Se11.B	Cond_Cmpt	560082	female	Se69	Frontaxlecmpt.	563159	female
Se11.C	Cond_Cmpt	560082	female	Se74	Rear_Axle_Cmpt	563340	male
Se13	Engine_Cmpt	562350	male	Se79	Front_Axle	563340	male
Se14.A	Driver_Area	561782	male	Se89	EngineCmpt	562350	male
Se14.B	Driver_Area	561781	female	Se94	WCLdoor	562877	female
Se15	RH_Console	560898	male	Se100	WCLdoor	562479	female
Se17	Entrace_Door	560081	female	shell1_1618	Driver_Area	562471	male
Se18	Servicecmpt.	561566	female	So3	RH_Console	641385	male
Se19_P	Service_Cmpt	563677	male	So4	RH_Console	641385	male
Se19_S	Service_Cmpt	563677	male	So5	RH_Console	641385	male
Se20	Evap_Cmpt	562426	male	So6	RH_Console	641385	male
Se21	Dash	561248	female	So7	Service_Cmpt	561566	female
Se23	Engine_Cmpt	563159	male	So8	Servicecmpt.	641385	male
Se24	Evap_Cmpt	563758	female	So9	Enginecmpt.	560016	female
Se25	Passenger_Area	561248	female	So10	Cond_Cmpt	562485	male
Se28	Pneumatic_plate	561690	male	So11	Cond_Cmpt	561566	female
Se29	Engine_Cmpt	561566	female	So13	Evap_Cmpt	563204	female
Se30	Enginedoor	562877	female	So14	Servicecmpt.	641385	male
Se31	Enginedoor	562877	female	So15	Servicecmpt.	641385	male
Se32	Rear_Axle_Cmpt	562426	male	So16	Servicecmpt.	641385	male
Se33	Rear_Axle_Cmpt	562856	male	So17	Servicecmpt.	562848	male
Se34	Rear_Axle_Cmpt	562426	male	So18	Pneumatic_plate	641385	male
Se35	Rear_Axle_Cmpt	562426	male	So19	Pneumatic_plate	641385	male
Se36	Rear_Axle_Cmpt	562427	male	So20	Servicecmpt.	641385	male
Se37	Front_Axle_LH	641132	female	So21	Front_Axle_Cmpt	564046	female
Se38	Front_Axle_RH	641132	female	So22	Front_Axle_Cmpt	564046	female
Se39	Rear_Axle_LH	641132	female	So23	Rear_Axle_Cmpt	564046	female
Se40	Rear_Axle_LH	641132	female	So24	Rear_Axle_Cmpt	564046	female

CONNECTORS LIST

No	Location	Part #	Gender	No	Location	Part #	Gender
So27	Rearaxlecmpt.	564045	female	Spk12_R	Parcel_Rack_RH	563994	male
So50	Rearaxlecmpt.	564046	female	Spk13_L	Parcel_Rack_LH	563994	male
So52	Rearaxlecmpt.	564045	female	Spk13_R	Parcel_Rack_RH	563994	male
So54	Enginecmpt.	564045	female	Spk14_L	Parcel_Rack_LH	563994	male
spBar4	Enginecmpt.	564135	male	Spk14_R	Parcel_Rack_RH	563994	male
spBar5	Enginecmpt.	564135	male	Spk15_L	Parcel_Rack_LH	563994	male
spBar6	Enginecmpt.	564135	male	Spk15_R	Parcel_Rack_RH	563994	male
spBar7	Enginecmpt.	564135	male	Spk16_L	Parcel_Rack_LH	563994	male
spBar11	Engine_Cmpt.	564135	male	Spk16_R	Parcel_Rack_RH	563994	male
spBar12	Engine_Cmpt.	564135	male	Spk16_R_Lav		563994	male
spBar13	Enginecmpt.	564135	male	SpkDr_L	Parcel_Rack_LH	563994	male
spBar14	Enginecmpt.	564135	male	SpkDr_R	Parcel_Rack_RH	563994	male
spBar15	Enginecmpt.	564135	male	Sub1.A	Passenger_Area	564004	female
spBar16	Enginecmpt.	564135	male	Sub2.A	Passenger_Area	564004	female
spBar19	Condensorcmpt.	564135	male	Sw1.C258	Driver_Area	561188	female
spBar20	Condensorcmpt.	564135	male	Sw1.C259	Driver_Area	561186	male
spBar21	Condensorcmpt.	564135	male	Sw2	Dash	562763	male
spBar22	Enginecmpt.	564135	male	Sw3	Dash	562763	male
spBar23	Enginecmpt.	564135	male	Sw4	Dash	562763	male
spBar24	Enginecmpt.	564135	male	Sw5	Dash	562763	male
Spk1_L	Parcel_Rack_LH	563994	male	Sw6	Dash	562763	male
Spk1_R	Parcel_Rack_RH	563994	male	Sw10A	LH_Console	562763	male
Spk2_L	Parcel_Rack_LH	563994	male	Sw12	Dash	562763	male
Spk2_R	Parcel_Rack_RH	563994	male	Sw14	Dash	562763	male
Spk3_L	Parcel_Rack_LH	563994	male	Sw16	Dash	562763	male
Spk3_R	Parcel_Rack_RH	563994	male	Sw17	Dash	562763	male
Spk4_L	Parcel_Rack_LH	563994	male	Sw18A	LH_Console	562763	male
Spk4_R	Parcel_Rack_RH	563994	male	Sw20	Dash	562763	male
Spk5_L	Parcel_Rack_LH	563994	male	Sw21	Dash	562763	male
Spk5_R	Parcel_Rack_RH	563994	male	Sw24	Dash	562763	male
Spk6_L	Parcel_Rack_LH	563994	male	Sw25	Dash	562763	male
Spk6_R	Parcel_Rack_RH	563994	male	Sw26	Dash	562763	male
Spk7_L	Parcel_Rack_LH	563994	male	Sw27	Dash	562763	male
Spk7_R	Parcel_Rack_RH	563994	male	Sw29	Dash	562763	male
Spk8_L	Parcel_Rack_LH	563994	male	Sw30	RJB	563135	male
Spk8_R	Parcel_Rack_RH	563994	male	Sw32	Dash	561477	female
Spk9_L	Parcel_Rack_LH	563994	male	Sw33	Dash	561476	male
Spk9_R	Parcel_Rack_RH	563994	male	Sw34	Outside_Front_RH	562477	male
Spk10_L	Parcel_Rack_LH	563994	male	Sw35	Console	562763	male
Spk10_R	Parcel_Rack_RH	563994	male	Sw38	LH_Console	562763	male
Spk11_L	Parcel_Rack_LH	563994	male	Sw39.A	RJB	562403	female
Spk11_R	Parcel_Rack_RH	563994	male	Sw39.B	RJB	562403	female
Spk12_L	Parcel_Rack_LH	563994	male	Sw40	LH_Console	561690	male

CONNECTORS LIST

No	Location	Part #	Gender	No	Location	Part #	Gender
Sw41	LH_Console	562749	male	Sw97.B	WCLsystem	562615	female
Sw42	Lugg_Cmpt	561636	female	Sw97.C	WCLsystem	562615	female
Sw43	LH_Console	561690	male	Sw98.A	WCLsystem	562615	female
Sw44.A	FJB	562403	female	Sw98.B	WCLsystem	562615	female
Sw44.B	FJB	562403	female	Sw98.C	WCLsystem	562615	female
Sw45.A	5th_Lugg_Cmpt	562485	male	Sw100	dash	562763	male
Sw45.B	5th_Lugg_Cmpt	562486	female	Sw107	dash	562763	male
Sw46.A	5th_Lugg_Cmpt	562485	male	Sw108	dash	562763	male
Sw46.B	5th_Lugg_Cmpt	562486	female	Sw124	DashBoard	562763	male
Sw47.A	3rd_Lugg_Cmpt	562485	male	Sw125.A	Service_Cmpt	561457	female
Sw47.B	3rd_Lugg_Cmpt	562486	female	Sw125.B	Service_Cmpt	561457	female
Sw48.A	3rd_Lugg_Cmpt	562485	male	Sw137	Dash	562763	male
Sw48.B	3rd_Lugg_Cmpt	562486	female	Sw149	Dash	562763	male
Sw49.A	2nd_Lugg_Cmpt	562485	male	Sw156	LH_Console	562763	male
Sw49.B	2nd_Lugg_Cmpt	562486	female	Sw157	Dash	562763	male
Sw50.A	2nd_Lugg_Cmpt	562485	male	Sw158	Dash	562763	male
Sw50.B	2nd_Lugg_Cmpt	562486	female	Sw629	Dash	562763	male
Sw51.A	1st_Lugg_Cmpt	562485	male	Sw660	Rear_Galley	562763	male
Sw51.B	1st_Lugg_Cmpt	562486	female	Sw661	Rear_Galley	562763	male
Sw52.A	1st_Lugg_Cmpt	562485	male	Sw662	Dash	562763	male
Sw52.B	1st_Lugg_Cmpt	562486	female	Sw663	Rear_Galley	562763	male
Sw55.A	Lavatory	560488	female	Sw670	dash	562763	male
Sw55.B	Lavatory	560488	female	sym698_166.A	Parcel_rack	564489	female
Sw56.A	Lavatory	560488	female	sym698_166.B	Parcel_rack	562706	female
Sw56.B	Lavatory	560488	female	sym698_166.C	Parcel_rack	562706	female
Sw58	Engine_Cmpt.	563135	male	sym699_166.A	Parcel_rack	564489	female
Sw59	Enginecmpt.	563135	male	sym699_166.B	Parcel_rack	562706	female
Sw63A	LHConsole	562763	male	sym699_166.C	Parcel_rack	562706	female
Sw64.A	Service_Cmpt	560815	female	sym700_166.A	Parcel_rack	564489	female
Sw64.B	Service_Cmpt	560815	female	sym700_166.B	Parcel_rack	562706	female
Sw82	RJB	563135	male	sym700_166.C	Parcel_rack	562706	female
Sw83.A	Dash	560082	female	sym812_291.A	Parcelrack	565180	female
Sw83.B	Dash	560815	female	tab69	Parcelrack	561626	N/A
Sw83.C	Dash	560082	female	Tab70a	Parcelrack	561626	N/A
Sw83.D	Dash	560815	female	Tab70b	Parcelrack	561626	N/A
Sw85	LH_Console	562749	male	tab71a	Parcelrack	561626	N/A
Sw95.A	WCLdoor	562615	female	TermL150	Parcel_rack	562505	N/A
Sw95.B	WCLdoor	562615	female	TermL248	Parcel_rack	562505	N/A
Sw95.C	WCLdoor	562615	female	VECF1	FJB	563186	male
Sw96.A	WCL_Door	562615	female	VECF2	FJB	563183	male
Sw96.B	WCL_Door	562615	female	VECF3	FJB	563185	male
Sw96.C	WCLdoor	562615	female	VECF4	FJB	563182	male
Sw97.A	WCLsystem	562615	female	VECF9	FJB	563448	male

CONNECTORS LIST

No	Location	Part #	Gender	No	Location	Part #	Gender
VECF10	FJB	563181	male				
VECF11	FJB	563184	male				
VECF12	FJB	563187	male				
VECR1	RJB	563186	male				
VECR2	RJB	563183	male				
VECR3	RJB	563185	male				
VECR4	RJB	563182	male				
VECR4.	RJB	563182	male				
VECR9	RJB	563448	male				
VECR10	RJB	563181	male				
VECR11	RJB	563184	male				
VECR12	RJB	563187	male				
VECT3	Rear_vehicule	563718	male				
VECT4	Rear_vehicule	563714	male				
Y80	Engine_Cmpt	563789	male				
Y81	Cond_Cmpt	563793	male				

CONNECTORS LIST

No	Location	Part #	Gender	No	Location	Part #	Gender
24SS_OP	Parcel_Rack_LH	563071	male	A34.K	Enginecmpt.	564270	male
24SS_OP	Parcel_Rack_LH	563040	female	A34.L	Enginecmpt.	564269	male
24SS_OP_2	Parcel_Rack_LH	563071	male	A36.JA	FJB	562767	male
24SS_OP_2	Parcel_Rack_LH	563040	female	A36.JB	FJB	562765	male
120V_inlet	Rearvehicule	561572	male	A36.JC	FJB	562957	male
A1	RJB	563975	male	A39.P101	Parcel_Rack_LH	563201	male
A2	FJB	563984	male	A39.P901	Parcel_Rack_LH	563953	male
A3	Dash	562363	male	A41.J1	FJB	563679	male
A4.A	Service_Cmpt	562428	female	A41.J2	FJB	564037	male
A4.B	Service_Cmpt	561188	female	A41.J3	FJB	564004	male
A5	Service_Cmpt	562428	female	A60.A	Parcel_Rack_LH	563071	male
A6	Engine_Cmpt	562427	male	A60.B	Parcel_Rack_LH	562706	female
A7	Rear_Axle_Cmpt	563979	male	A60.C	Parcel_Rack_LH	901110	male
A9.Cx1	FJB	564041	female	A60.D	Parcel_Rack_LH	901110	male
A9.Cx2	FJB	563678	male	A61.A	Parcel_Rack_LH	562464	male
A9.Cx3	FJB	564037	female	A61.B	Parcel_Rack_LH	562465	male
A9.Cx4	FJB	564038	female	A65.A	Parcel_Rack_LH	563025	male
A10.X1	Engine_Cmpt	563135	male	A65.B4	Parcel_Rack_LH	bidon	male
A10.X3	Engine_Cmpt	563134	female	A65.B5	Parcel_Rack_LH	bidon	male
A11	LH_Console	563142	male	A65.B6	Parcel_Rack_LH	bidon	male
A14.A	Dash	562766	male	A65.D	Parcel_Rack_LH	bidon	male
A14.B	Dash	562767	male	A65.E	Parcelrack	563071	male
A14.C	Dash	562765	male	A65.G1	Parcel_Rack_LH	563071	male
A15	Dash	562464	male	A65.G2	Parcel_Rack_LH	563071	male
A17.D	RJB	561932	male	A65.G3	Parcel_Rack_LH	563071	male
A18.J1	FJB	562794	male	A65.H1	Parcel_Rack_LH	561716	female
A18.J2	FJB	562650	male	A65.H2	Parcel_Rack_LH	561716	female
A19	LH_Console	562878	female	A65.H3	Parcel_Rack_LH	561716	female
A20	Parcel_Rack_LH	561477	female	A65.J	Parcel_Rack_LH	562465	male
A24.A	RH_Console	561890	male	A69L.A	Parcel_Rack_LH	563025	male
A24.B	RH_Console	561566	female	A69L.B1	Parcel_Rack_LH	bidon	male
A24.C	RH_Console	561889	female	A69L.B2	Parcel_Rack_LH	bidon	male
A25	Parcel_Rack_LH	563025	male	A69L.B3	Parcel_Rack_LH	bidon	male
A26.P1	Enginecmpt.	562350	male	A69L.B4	Parcel_Rack_LH	bidon	male
A26.P2	Enginecmpt.	563322	female	A69L.C	Parcel_Rack_LH	bidon	male
A26.P4	Enginecmpt.	568088	male	A69R.A	Parcel_Rack_LH	563025	male
A27	Service_Cmpt	562929	male	A69R.B1	Parcel_Rack_LH	bidon	male
A28	Service_Cmpt	562928	male	A69R.B2	Parcel_Rack_LH	bidon	male
A29.	Dash	562464	male	A69R.B3	Parcel_Rack_LH	bidon	male
A29.	Dash	565871	female	A69R.B4	Parcel_Rack_LH	bidon	male
A33.A	Parcel_Rack_LH	563071	male	A69R.C	Parcel_Rack_LH	bidon	male
A33.B	Parcel_Rack_LH	562330	female	A70a	Parcel_Rack_LH	561540	female
A34.J	Enginecmpt.	568118	male	A70b	Parcel_Rack_LH	561540	female

CONNECTORS LIST

No	Location	Part #	Gender	No	Location	Part #	Gender
A77	Parcelrack	564547	male	A121.Vsd	Dash	564118	male
A78	Parcelrack	562583	female	A122.A	Parcel_Rack_LH	563960	male
A79	Parcelrack	562583	female	A122.B	Parcel_Rack_LH	563962	male
A80	Parcelrack	562479	female	A122.C1	Parcel_Rack_LH	563956	male
A81.JA	FJB	562767	male	A122.C2	Parcel_Rack_LH	563957	male
A81.JB	FJB	562765	male	A122.C3	Parcel_Rack_LH	563958	male
A81.JC	FJB	562957	male	A123.A	Parcel_Rack_LH	563960	male
A83.A	FJB	565970	female	A123.B	Parcel_Rack_LH	563962	male
A95.A	Parcelrack	564489	female	A123.C1	Parcel_Rack_LH	563956	male
A95.B	Parcelrack	562706	female	A123.C2	Parcel_Rack_LH	563957	male
A95.C	Parcelrack	562706	female	A123.C3	Parcel_Rack_LH	563958	male
A96.A	FJB	564205	male	A124.A	Parcel_Rack_LH	563960	male
A97	Dash	563226	male	A124.B	Parcel_Rack_LH	563962	male
A97A	FJB	563226	male	A124.C1	Parcel_Rack_LH	563956	male
A97A	FJB	563613	female	A124.C2	Parcel_Rack_LH	563957	male
A97B	FJB	563226	male	A124.C3	Parcel_Rack_LH	563958	male
A97B	FJB	563613	female	A130	Driver_Area	563226	male
A97S.A1	Dash	564401	male	A131.A	Engine_Cmpt	561782	male
A97S.A2	Dash	564402	male	A131.B	Engine_Cmpt	561781	female
A97S.A3	Dash	564403	male	A137A	Condensercmpt.	20429843	male
A99	FJB	564205	male	A138	Cond_Cmpt	563787	male
A100	Front_Axle_Cmpt	563632	male	A139	Dash	564501	male
A101	Rear_RH_Axle_Cmpt	563632	male	A150	Parcelrack	21280133	male
A102	Rear_RH_Axle_Cmpt	563632	male	A152.A	Parcelrack	561550	male
A103	Dash	562070	female	A152.B	Parcelrack	563071	male
A107	EngineCmpt.	560336	male	A152.C	Parcelrack	563071	male
A108	RJB	562766	male	A152.D	Parcelrack	563071	male
A109A	FJB	564141	male	A152.E	Parcelrack	563071	male
A111	RJB	562550	female	A152.F	Parcelrack	563071	male
A113.A	Parcel_Rack_LH	563960	male	A152.G	Parcelrack	563071	male
A113.B	Parcel_Rack_LH	563962	male	A152.H	Parcelrack	563071	male
A113.C1	Parcel_Rack_LH	563956	male	A152.I	Parcelrack	563071	male
A113.C2	Parcel_Rack_LH	563957	male	A152.J	Parcelrack	563071	male
A113.C3	Parcel_Rack_LH	563958	male	A152.K	Parcelrack	562779	male
A114A	Dash	564252	male	A152.L	Parcelrack	562779	male
A120.A	Dashboard	563960	male	A162.A	FrontCab	561566	female
A120.B	Dashboard	563962	male	A162.B	FrontCab	561782	male
A120.C1	Dashboard	563956	male	A164.A	RH_trapezoidal_window	561566	female
A120.C2	Dashboard	563957	male	A164.B	RH_trapezoidal_window	561782	male
A120.C3	Dashboard	563958	male	A165	Dash	560641	male
A121.Vsa	Dash	563679	male	A166	RearCab	561637	male
A121.Vsb	Dash	563678	male	A222M.A	Driver_Area	563040	female
A121.Vsc	Dash	564037	male	A222M.B	Driver_Area	565871	female

CONNECTORS LIST

No	Location	Part #	Gender	No	Location	Part #	Gender
A222W.A	Driver_area	563409	male	AE47.J3	RH_console	565957	male
A222W.B	Driver_area	563409	male	AE48.J1	RH_console	563679	male
A223M.A	Driver_area	563040	female	AE48.J2	RH_console	564037	female
A223M.B	Driver_area	565871	female	AE48.J3	RH_console	565957	male
A223W.A	Driver_area	563409	male	AE49..J1	RJB	563679	male
A223W.B	Driver_area	563409	male	AE49..J2	RJB	564037	male
A309.A	Rear_LH_Lugg	564576	male	AE49..J3	RJB	565957	male
A309.B	Rear_LH_Lugg	564576	male	AE49.J1	RJB	563679	male
A309.C	Rear_LH_Lugg	561566	female	AE49.J2	RJB	564037	male
A310.A	Rear_LH_Lugg	564576	male	AE49.J3	RJB	565957	male
A310.B	Rear_LH_Lugg	564576	male	AE50..J1	RJB	563679	male
A310.C	Rear_LH_Lugg	561566	female	AE50..J2	RJB	564037	male
A614.A	Parcelrack	561550	male	AE50..J3	RJB	565957	male
A614.C1	Parcelrack	563071	male	AE50.J1	RJB	563679	male
A614.C2	Parcelrack	563071	male	AE50.J2	RJB	564037	male
A614.C3	Parcelrack	563071	male	AE50.J3	RJB	565957	male
A614.C4	Parcelrack	563071	male	AE51.J1	RJB	563679	male
A614.C5	Parcelrack	563071	male	AE51.J2	RJB	564037	female
A614.C6	Parcelrack	563071	male	AE51.J3	RJB	565957	male
A614.I/O	ParcelRack	bidon	male	AE52..J1	RJB	563679	male
A614.P1	Parcelrack	562783	male	AE52..J2	RJB	564037	male
A614.P2	Parcelrack	562783	male	AE52..J3	RJB	565957	male
A614.P3	Parcelrack	562783	male	AE52.J1	RJB	563679	male
AE41.J1	FJB	563679	male	AE52.J2	RJB	564037	female
AE41.J2	FJB	564037	female	AE52.J3	RJB	565957	male
AE41.J3	FJB	564004	male	AE53.J1	LH_ParcelRack	563679	male
AE42.J1	FJB	563679	male	AE53.J2	LH_ParcelRack	564037	female
AE42.J2	FJB	564037	female	AE53.J3	LH_ParcelRack	565957	male
AE42.J3	FJB	564004	male	AE54.J1	Evaporatorcmpt.	563679	male
AE43.J1	FJB	563679	male	AE54.J2	Evaporatorcmpt.	564037	female
AE43.J2	FJB	564037	male	AE54.J3	Evaporatorcmpt.	565957	male
AE43.J3	FJB	565957	male	AE55.J1	Dash	563679	male
AE44.J1	FJB	563679	male	AE55.J2	Dash	564037	female
AE44.J2	FJB	564037	female	AE55.J3	Dash	564004	male
AE44.J3	FJB	565957	male	AE56.J1	Dash	563679	male
AE45.J1	FJB	563679	male	AE56.J2	Dash	564037	male
AE45.J2	FJB	564037	female	AE56.J3	Dash	564004	male
AE45.J3	FJB	565957	male	AE57.J1	WCLcmpt.	563679	male
AE46.J1	FJB	563679	male	AE57.J2	WCLcmpt.	564037	male
AE46.J2	FJB	564037	female	AE57.J3	WCLcmpt.	564004	male
AE46.J3	FJB	565957	male	AltLL.A	Enginecmpt.	563746	female
AE47.J1	RH_console	563679	male	AltLL.B	Enginecmpt.	560815	female
AE47.J2	RH_console	564037	female	AltLL.C	Enginecmpt.	564469	female

CONNECTORS LIST

No	Location	Part #	Gender	No	Location	Part #	Gender
AltLR.A	enginecmpt.	563746	female	C8	FJB	563227	male
AltLR.B	Enginecmpt.	560815	female	C8	FJB	563614	female
AltLR.C	Enginecmpt.	564469	female	C9	RJB	561986	male
AltUR.A	Enginecmpt.	563746	female	C9	RJB	561987	female
AltUR.B	Enginecmpt.	560815	female	C10	Engine_Cmpt	562581	male
AltUR.C	Enginecmpt.	564469	female	C10	Engine_Cmpt	562583	female
B85	Engine_Cmpt	563815	male	C11	Service_Cmpt	563580	male
B96	Engine_Cmpt	563821	male	C11	Service_Cmpt	563581	female
B96B	Engine_Cmpt	563823	male	C12	Engine_Cmpt	562581	male
B97	Engine_Cmpt	563816	male	C12	Engine_Cmpt	562583	female
B98	Engine_Cmpt	563817	male	C13_plug	RH_Console	563589	male
B99	Engine_Cmpt	563815	male	C13_socket	RH_Console	563590	female
B115A	Enginecmpt.	564226	male	C13S	RH_Console	563589	male
B142C	Condensercmpt.	563793	male	C13S	RH_Console	563590	female
B310	Enginecmpt.	565967	male	C15A	EvaporatorCmpt	568110	male
C1	FJB	563589	male	C15A	EvaporatorCmpt	568109	female
C1	FJB	563590	female	C16	RJB	561577	male
C1S	FJB	563589	male	C16	RJB	561605	female
C1S	FJB	563590	female	C17	RJB	560195	male
C2	Service_Cmpt	563580	male	C17	RJB	560169	female
C2	Service_Cmpt	563581	female	C18	FJB	561986	male
C2A	FJB	563580	male	C18	FJB	561987	female
C2A	FJB	563581	female	C19	RJB	561986	male
C2B	FJB	564034	male	C19	RJB	561987	female
C2B	FJB	564035	female	C20A	Evap_Cmpt	562485	male
C3_plug	RJB	563589	male	C20A	Evap_Cmpt	562486	female
C3_socket	RJB	563590	female	C20B	Evap_Cmpt	562485	male
C3AP	FJB	563589	male	C20B	Evap_Cmpt	562486	female
C3AP	FJB	563590	female	C23	Evaporatorcmpt.	564034	male
C3AS	FJB	563589	male	C23	Evaporatorcmpt.	564035	female
C3AS	FJB	563590	female	C24_plug	Evap_Cmpt	561690	male
C3S	RJB	563593	male	C24_socket	Evap_Cmpt	561566	female
C3S	RJB	563590	female	C25	Parcel_Rack_LH	561550	male
C4	FJB	563580	male	C25	Parcel_Rack_LH	561667	female
C4	FJB	563581	female	C26	Ureacmpt.	563226	male
C5	FJB	563589	male	C26	Ureacmpt.	563613	female
C5	FJB	563590	female	C26A	Ureacmpt	568110	male
C5S	FJB	563589	male	C26A	Ureacmpt	568109	female
C5S	FJB	563590	female	C26B	Ureacmpt.	563227	male
C6	FJB	563582	male	C26B	Ureacmpt.	563614	female
C6	FJB	563583	female	C29	4rd_Lugg_Cmpt	563651	male
C7	Service_Cmpt	562581	male	C29	3rd_Lugg_Cmpt	563652	female
C7	Service_Cmpt	562583	female	C30	3rd_Lugg_Cmpt	561710	male

CONNECTORS LIST

No	Location	Part #	Gender	No	Location	Part #	Gender
C30	3rd_Lugg_Cmpt	561709	female	C55	Evap_Cmpt	561577	male
C31W	Parcelrack	563227	male	C55	Evap_Cmpt	561605	female
C31W	Parcelrack	563614	female	C59	RJB	561643	male
C32	lavatory	561734	male	C59	RJB	561642	female
C32	Lavatory	561735	female	C63	Entrace_Door	562581	male
C32W	WCLcmpt.	561669	male	C63	Entrace_Door	562583	female
C32W	WCLcmpt.	561670	female	C64	Engine_Cmpt	568110	male
C33	WCLcmpt.	564034	male	C64	Engine_Cmpt	568109	female
C33	WCLcmpt.	564035	female	C64X	Aisle_section	560898	male
C34	RH_Console	561986	male	C64X	Aisle_section	560900	female
C34	RH_Console	561987	female	C66_plug	Evap_Cmpt	561577	male
C36	FJB	561986	male	C66_socket	Evap_Cmpt	561605	female
C36	FJB	561987	female	C67	Parcelrack	561734	male
C37.	Parcel_Rack_LH	561734	male	C67	Parcelrack	561735	female
C37.	Parcel_Rack_LH	561735	female	C69_plug	FJB	561690	male
C38.	Parcelrack	561734	male	C69_socket	FJB	561566	female
C38.	Parcelrack	561735	female	C70	FJB	562557	male
C39	Parcelrack	562503	male	C70	FJB	562558	female
C39	Parcelrack	562507	female	C71	FJB	561646	male
C39A	Firesuppressioncmpt.	561782	male	C71	FJB	561645	female
C39A	Firesuppressioncmpt.	561781	female	C72	FJB	561646	male
C40	Dash	562485	male	C72	FJB	561645	female
C40	Dash	562486	female	C74	FJB	561645	female
C41	RJB	561782	male	C74	FJB	561646	male
C41	RJB	561781	female	C87	Engine_Cmpt	562485	male
C44_plug	FJB	561577	male	C87	Engine_Cmpt	562486	female
C44_socket	FJB	561605	female	C88	WCL_Cmpt.	563226	male
C45	FJB	561643	male	C88	WCL_Cmpt.	563613	female
C45	FJB	561642	female	C90	RJB	563582	male
C46	3rdlugg.cmpt.	562549	male	C90	RJB	563583	female
C46	3rdlugg.cmpt.	562550	female	C91	RJB	562285	male
C47	FJB	565207	male	C91	RJB	562282	female
C48	RJB	565208	male	C94_plug	FJB	563589	male
C49	FJB	562005	male	C94_socket	FJB	563590	female
C49	FJB	561714	female	C96	FJB	561646	male
C50	RJB	568110	male	C96	FJB	561645	female
C50	RJB	568109	female	C97	FJB	561643	male
C54	Engine_Cmpt.	563226	male	C97	FJB	561642	female
C54	Engine_Cmpt.	563613	female	C99	Enginecmpt.	562581	male
C54A	Ureacmpt	568110	male	C99	Enginecmpt.	562583	female
C54A	Ureacmpt	568109	female	C100	Evaporatorcmpt.	562477	male
C54B	Engine_Cmpt.	562477	male	C100	Evaporatorcmpt.	562479	female
C54B	Engine_Cmpt.	562479	female	C100S	Evaporator_Cmpt.	562477	male

CONNECTORS LIST

No	Location	Part #	Gender	No	Location	Part #	Gender
C100S	Evaporator_Cmpt.	562479	female	C166	Parcel_Rack_RH	561637	male
C101	Service_Cmpt	561690	male	C166	Parcel_Rack_RH	561636	female
C101	Service_Cmpt	561566	female	C167	FJB	561577	male
C103_plug	FJB	562485	male	C167	FJB	561605	female
C103_socket	FJB	562486	female	C170	LH_Console	561637	male
C105_plug	FJB	562581	male	C170	LH_Console	561636	female
C105_socket	FJB	562583	female	C171	LH_Console	561646	male
C106_plug	FJB	562581	male	C171	LH_Console	561645	female
C106_socket	FJB	562583	female	C175	RJB	563226	male
C107A	Enginecmpt.	562885	female	C175	RJB	563613	female
C107A	Enginecmpt.	562884	female	C175.	RJB	563226	male
C107B	Enginecmpt.	562885	female	C175.	RJB	563613	female
C107B	Enginecmpt.	562884	female	C187	RJB	561577	male
C107C	Enginecmpt.	562885	female	C187	RJB	561605	female
C107C	Enginecmpt.	562884	female	C188	Evap_Cmpt	561577	male
C108	Dash	562557	male	C188	Evap_Cmpt	561605	female
C108	dash	562558	female	C189	RJB	561986	male
C110	Dash	568110	male	C189	RJB	561987	female
C110	Dash	568109	female	C193_plug	RJB	563589	male
C119A	Rear_engine_door	568110	male	C193_socket	RJB	563590	female
C119A	Rear_engine_door	568109	female	C194	FJB	563589	male
C124	DashBoard	562503	male	C194	FJB	563590	female
C124	DashBoard	562507	female	C195	dash	563347	male
C129	Dash	563858	male	C195	dash	560489	female
C129	Dash	563859	female	C195A	LH_Console	563347	male
C131A	Engine_Cmpt	561782	male	C195A	LH_Console	560489	female
C131A	Engine_Cmpt	561781	female	C195B	LH_Console	563347	male
C131B	Engine_Cmpt	561782	male	C195B	LH_Console	560489	female
C131B	Engine_Cmpt	561781	female	C195C	LH_Console	564222	male
C144	RJB	560852	male	C195C	LH_Console	564224	female
C144	RJB	560851	female	C206	Parcel_Rack_RH	562503	male
C152	Cond_Cmpt	561611	male	C206	Parcel_Rack_RH	562507	female
C152	Cond_Cmpt	561610	female	C207	Parcel_Rack_LH	562503	male
C162	FrontCab	561690	male	C207	Parcel_Rack_LH	562507	female
C162	FrontCab	561566	female	C213	Parcel_Rack_LH	561515	male
C164A	RH_Trapezoidal_Window	561690	male	C213	Parcel_Rack_LH	561552	female
C164A	RH_Trapezoidal_Window	561566	female	C222	FJB	562477	male
C164AA	RH_Trapezoidal_Window	561690	male	C222	FJB	562479	female
C164AA	RH_Trapezoidal_Window	561566	female	C223	FJB	563227	male
C164B	RH_Trapezoidal_Window	561782	male	C223	FJB	563614	female
C164B	RH_Trapezoidal_Window	561781	female	C224	FJB	561637	male
C164BB	RH_Trapezoidal_Window	561782	male	C224	FJB	561636	female
C164BB	RH_Trapezoidal_Window	561781	female	C225	FJB	562650	male

CONNECTORS LIST

No	Location	Part #	Gender	No	Location	Part #	Gender
C225	FJB	562649	female	C430	LH_Console	562363	male
C226	FJB	562650	male	C430	LH_Console	561188	female
C226	FJB	562649	female	C430.	LH_Console	562363	male
C226a_plug	FJB	562650	male	C430.	LH_Console	561188	female
C226a_socket	FJB	562649	female	C430..	LH_Console	562363	male
C279	Service_Cmpt	562477	male	C430..	LH_Console	561188	female
C279	Service_Cmpt	562479	female	C452	Dash	561986	male
C279A	Service_Cmpt	562477	male	C452	Dash	561987	female
C279A	Service_Cmpt	562479	female	C463	Rearaxlecmpt	568112	male
C284	Parcel_Rack	561782	male	C463	Rearaxlecmpt	568111	female
C284	Parcel_Rack	561781	female	C464	FJB	564222	male
C284_1	Parcel_Rack	561782	male	C464	FJB	564224	female
C284_1	Parcel_Rack	561781	female	C464A	Dash	564222	male
C284_2	Parcel_Rack	561782	male	C464A	Dash	564224	female
C284_2	Parcel_Rack	561781	female	C464B	FJB	564222	male
C284_3	Parcel_Rack	561782	male	C464B	FJB	564224	female
C284_3	Parcel_Rack	561781	female	C465	Parcelrack	562581	male
C284_4	Parcel_Rack	561782	male	C465	Parcelrack	562583	female
C284_4	Parcel_Rack	561781	female	C506	FJB	561687	male
C284_5	Parcel_Rack	561782	male	C506	FJB	561685	female
C284_5	Parcel_Rack	561781	female	C540	Parcel_Rack_LH	562477	male
C284_6	Parcel_Rack	561782	male	C540	Parcel_Rack_LH	562479	female
C284_6	Parcel_Rack	561781	female	C540._plug	Parcel_Rack_LH	562477	male
C298	Parcel_Rack_LH	561611	male	C540._socket	Parcel_Rack_LH	562479	female
C298	Parcel_Rack_LH	561610	female	C541	Parcel_Rack_LH	563226	male
C333	Upper_front	561550	male	C541	Parcel_Rack_LH	563613	female
C333	Upper_front	561667	female	C542	Parcelrack	561550	male
C355	RJB	563582	male	C542	Parcelrack	561667	female
C355	RJB	565887	female	C543	Parcel_Rack_LH	561607	male
C356	Parcelrack	561710	male	C543	Parcel_Rack_LH	561606	female
C356	Parcelrack	561709	female	C544_plug	Parcel_Rack_LH	562477	male
C357	Parcelrack	561847	male	C544_socket	Parcel_Rack_LH	562479	female
C357	Parcelrack	561862	female	C545	Parcel_Rack_LH	561550	male
C380A	Dash	564222	male	C545	Parcel_Rack_LH	561667	female
C380A	Dash	564224	female	C558	Parcelrack	562503	male
C381	Parcel_Rack	561847	male	C558	Parcelrack	562507	female
C381	Parcel_Rack	561862	female	C564	Parcelrack	562503	male
C382	Under_Seat	561580	male	C564	Parcelrack	562507	female
C382	Under_Seat	561582	female	C564_Sp	Parcelrack	562503	male
C397	RJB	562285	male	C564_Sp	Parcelrack	562507	female
C397	RJB	562282	female	C566	Parcelrack	562503	male
C397.	RJB	562285	male	C566	Parcelrack	562507	female
C397.	RJB	562282	female	C567	Parcelrack	562503	male

CONNECTORS LIST

No	Location	Part #	Gender	No	Location	Part #	Gender
C567	Parcelrack	562507	female	C617	Mirror_LH	563801	male
C574	Parcel_Rack_RH	562549	male	C617	Mirror_LH	563800	female
C574	Parcel_Rack_RH	562550	female	C618	Mirror_RH	563801	male
C575	Parcel_Rack_RH	562503	male	C618	Mirror_RH	563800	female
C575	Parcel_Rack_RH	562507	female	C619_plug	Dash	562485	male
C576B	Parcel_Rack_RH	562006	male	C619_socket	Dash	562486	female
C576B	Parcel_Rack_RH	560908	female	C621	Aisle_section	560898	male
C576BB	Parcelrack	562006	male	C621	Aisle_section	560900	female
C576BB	Parcelrack	560908	female	C624_plug	Rear_Galley	561690	male
C577A	Parcel_Rack	562006	male	C624_socket	Rear_Galley	561566	female
C577A	Parcel_Rack	560908	female	C626	FJB	562485	male
C577AA	Parcelrack	562006	male	C626	FJB	562486	female
C577AA	Parcelrack	560908	female	C629	DashBoard	561690	male
C578	Parcel_Rack_LH	562503	male	C629	DashBoard	561566	female
C578	Parcel_Rack_LH	562507	female	C630	Parcel_Rack	561690	male
C579	Parcel_Rack_LH	562549	male	C630	Parcel_Rack	561566	female
C579	Parcel_Rack_LH	562550	female	C633	Aisle_section	560898	male
C582	FJB	561690	female	C633	Aisle_section	560900	female
C582	FJB	561566	female	C633A	Aisle_section	560898	male
C600	Dash	563226	male	C633A	Aisle_section	560900	female
C600	Dash	563613	female	C634	Aisle_section	560898	male
C600A	Dash	563226	male	C634	Aisle_section	560900	female
C600A	Dash	563613	female	C634A	Aisle_section	560898	male
C600B	Dash	563226	male	C634A	Aisle_section	560900	female
C600B	Dash	563613	female	C636	Aisle_section	560898	male
C601	LHRoofWinAjar	561476	male	C636	Aisle_section	560900	female
C601	LHRoofWinAjar	561477	female	C645	Aisle_section	560898	male
C602	RH_Roof_Win_Ajar	561476	male	C645	Aisle_section	560900	female
C602	RH_Roof_Win_Ajar	561477	female	C660	Rear_Galley	562646	male
C602A	RH_Roof_Win_Ajar	561668	male	C660	Rear_Galley	562647	female
C602A	RH_Roof_Win_Ajar	561551	female	C662	FJB	562477	male
C603	RHRoofWinAjar	561476	male	C662	FJB	562479	female
C603	RHRoofWinAjar	561477	female	C662._plug	FJB	562477	male
C603.	RHRoofWinAjar	561669	male	C662._socket	FJB	562479	female
C603.	RHRoofWinAjar	561670	female	C700	FJB	561637	male
C606	Rear_LH_Lugg	561577	male	C700	FJB	561636	female
C606	Rear_LH_Lugg	561605	female	C700:2	FJB		outofrange.
			male	C700:3	FJB		outofrange.
			female	C700:4	FJB		outofrange.
C614	Passenger_Area	563071	male	C700:7	FJB		outofrange.
C614	Passenger_Area	563040	female	C710	Front_LH_ParcelRack	561637	male
C615	Passenger_Area	563071	male	C710	Front_LH_ParcelRack	561636	female
C615	Passenger_Area	563040	female	C752_plug	Parcel_Rack	901062	male

CONNECTORS LIST

No	Location	Part #	Gender	No	Location	Part #	Gender
C752_socket	Parcel_Rack	901283	female	C_USB	Parcel_Rack	562070	female
C753_plug	Parcel_Rack	901062	male	CCAN1	FJB	562650	male
C753_socket	Parcel_Rack	901283	female	CCAN1	FJB	562649	female
C766	Parcelrack	561662	male	CCAN2	FJB	562650	male
C766	Parcelrack	561661	female	CCAN2	FJB	562649	female
C768	Parcel_Rack	901062	male	CCAN3	FJB	562650	male
C768	Parcel_Rack	901283	female	CCAN3	FJB	562649	female
C769	Parcel_Rack	901062	male	CCAN4	FJB	562650	male
C769	Parcel_Rack	901283	female	CCAN4	FJB	562649	female
C777	Dash	562477	male	CCust	RJB	562477	male
C777	Dash	562479	female	CCust	RJB	562479	female
C_A60DB	Parcel_Rack	563071	male	CCust.	RJB	562477	male
C_A60DB	Parcel_Rack	563040	female	CCust.	RJB	562479	female
C_A69R	Parcel_Rack	563025	male	CFHPR1	Parcelrack	564560	male
C_A97	Dash	563226	male	CIND-1.A	Parcelrack	560908	female
C_A97	Dash	563613	female	CIND-1.B	Parcelrack	560908	female
C_ALT	Enginecmpt.	562581	male	CIND-2.A	Parcelrack	560908	female
C_ALT	Enginecmpt.	562583	female	CIND-2.B	Parcelrack	560908	female
C_ALT3	Enginecmpt.	562477	male	CIND-11.A	Parcelrack	560908	female
C_ALT3	Enginecmpt.	562479	female	CIND-11.B	Parcelrack	560908	female
C_AUDIO_AUX	Parcel_Rack	562557	male	CINDWC-1.A	Parcelrack	560908	female
C_AUDIO_AUX	Parcel_Rack	562558	female	CINDWC-1.B	Parcelrack	560908	female
C_Audio_HDMI_L	Parcel_Rack	901062	male	CL1	FJB	562485	male
C_Audio_HDMI_L	Parcel_Rack	901283	female	CL1	FJB	562486	female
C_Audio_HDMI_R	Parcel_Rack	901062	male	CL58A	Aisle_Section	560898	male
C_Audio_HDMI_R	Parcel_Rack	901283	female	CL58A	Aisle_Section	560900	female
C_AUX	Parcelrack	563071	male	CMo61	Parcelrack	561247	male
C_AUX	Parcelrack	563040	female	CMo61	Parcelrack	561248	female
C_AUX_2	Parcelrack	563071	male	CP1	Passenger_Area	561782	male
C_AUX_2	Parcelrack	563040	female	CP1	Passenger_Area	561781	female
C_INV1	Parcelrack	562337	male	CP2	Passenger_Area	561782	male
C_INV1	Parcelrack	562338	male	CP2	Passenger_Area	561781	female
C_INV2	Parcelrack	562337	male	CP3	Passengersarea	561782	male
C_INV2	Parcelrack	562338	male	CP3	Passengersarea	561781	female
C_LineOut	Parcelrack	563962	male	CP4	Passenger_Area	561782	male
C_LineOut	Parcelrack	564489	female	CP4	Passenger_Area	561781	female
C_Mo9	Evap_Cmpt	561577	male	CP5	Passenger_Area	561782	male
C_Mo9	Evap_Cmpt	561605	female	CP5	Passenger_Area	561781	female
C_Mo9:2	Evap_Cmpt	561577	male	CP7	Rear_LH_Lugg	562337	male
C_Mo9:2	Evap_Cmpt	561605	female	CP7	Rear_LH_Lugg	562338	female
C_Se51	dash	563589	male	CPA17B	RJB	562337	male
C_Se51	dash	563590	female	CPA17B	RJB	562338	female
C_USB	Parcel_Rack	562069	male	CSo53	Rear_axle_cmpt.	561690	male

CONNECTORS LIST

No	Location	Part #	Gender	No	Location	Part #	Gender
CSo53	Rear_axle_cmpt.	561566	female	L39	Parcelrack	560898	male
CSo58	Rear_axle_cmpt.	561690	male	L40	Parcelrack	560898	male
CSo58	Rear_axle_cmpt.	561566	female	L41	Parcelrack	560898	male
CSw102	Rear_vehicule	562549	male	L42	Parcelrack	560898	male
CSw102	Rear_vehicule	562550	female	L43	Parcelrack	560898	male
CSX1	Engine_Cmpt	563135	male	L44	Parcelrack	560898	male
CSX1	Engine_Cmpt	563134	female	L45	Parcelrack	560898	male
CSX3	Engine_Cmpt	563135	male	L46	Parcelrack	560898	male
CSX3	Engine_Cmpt	563134	female	L47	Parcelrack	560898	male
CT_IN	Rear_Vehicle	560167	male	L48	Parcelrack	560898	male
CT_IN	Rear_Vehicle	560159	female	L49	Parcelrack	560898	male
CT_IN2	Engine_Cmpt	560167	male	L50	Parcelrack	560898	male
CT_IN2	Engine_Cmpt	560159	female	L51	Parcelrack	560898	male
CT_Out	Rear_Vehicle	560233	female	L52	Parcelrack	560898	male
EI	Enginecmpt.	563739	male	L52	Parcelrack	560900	female
L1A	Engine_Cmpt	560774	male	L52A	Parcelrack	560898	male
L16.A	Frontroof	562615	female	L53	Parcelrack	560898	male
L16.B	Frontroof	562615	female	L53	Parcelrack	560900	female
L17.A	Frontroof	562615	female	L53A	Parcelrack	560898	male
L17.B	Frontroof	562615	female	L54	Parcelrack	560898	male
L18	Entrance_Door	562549	male	L54	Parcelrack	560900	female
L19	Entracedoor	562486	female	L54A	Parcelrack	560898	male
L20	Entracedoorstep	562486	female	L55	Parcelrack	560898	male
L21	Upper_front	562486	female	L55	Parcelrack	560900	female
L22	Upper_front	562486	female	L55A	Parcelrack	560898	male
L23	Upper_front	562486	female	L56	Parcelrack	560898	male
L24	Upper_front	562486	female	L56	Parcelrack	560900	female
L25	Upper_front	562486	female	L56A	Parcelrack	560898	male
L26	Upper_front	562486	female	L57	Parcelrack	560898	male
L27	Upper_front	562486	female	L57	Parcelrack	560900	female
L28	Parcelrack	560898	male	L57A	Parcelrack	560898	male
L29	Parcelrack	560898	male	L58	Parcelrack	560898	male
L30	Parcelrack	560898	male	L58	Parcelrack	560900	female
L30A.A	Parcelrack	560898	male	L58A	Parcelrack	560898	male
L30B.A	Parcelrack	560898	male	L63	Front_Side_LH	562155	male
L31	Parcelrack	560898	male	L64	Outside_Front_RH	562155	male
L32	Parcelrack	560898	male	L64X	Aisle_Section	560898	male
L33	Parcelrack	560898	male	L65	Outside_Front_LH	562155	male
L34	Parcelrack	560898	male	L66	Out_Side_Front_LH	562155	male
L35	Parcelrack	560898	male	L67	4th_Lugg_Cmpt	562155	male
L36	Parcelrack	560898	male	L68	4th_Lugg_Cmpt	562155	male
L37	Parcelrack	560898	male	L69	4th_Lugg_Cmpt	562155	male
L38	Parcelrack	560898	male	L70	4th_Lugg_Cmpt	562155	male

CONNECTORS LIST

No	Location	Part #	Gender	No	Location	Part #	Gender
L72	Rear_Vehicle	562155	male	L156	Parcelrack	561186	male
L74	Rear_Vehicle	562155	male	L157	Parcelrack	561186	male
L75	Rearenginedoor	562155	male	L158	Parcelrack	561186	male
L76	Rear_engine_door	562155	male	L173	Parcelrack	563590	female
L81.A	Rear_Vehicle	562835	female	L174A	Parcelrack	563590	female
L81.B	Rear_Vehicle	562834	male	L175	Engine_Cmpt.	563590	female
L82A	Rearvehicule	562348	female	L176	5th_Lugg_Cmpt	561247	male
L83A	Rearvehicule	562348	female	L177	5th_Lugg_Cmpt	561247	male
L84	Rear_roof	562486	female	L178	3rd_Lugg_Cmpt	561247	male
L85	Rear_roof	562486	female	L179	3rd_Lugg_Cmpt	561247	male
L86	Rear_roof	562486	female	L180	2nd_Lugg_Cmpt	561247	male
L87	Rear_roof	562486	female	L181	2nd_Lugg_Cmpt	561247	male
L88	Rear_roof	562486	female	L182	1st_Lugg_Cmpt	561247	male
L89	Rear_roof	562486	female	L183	1st_Lugg_Cmpt	561247	male
L90	Rear_roof	562486	female	L184	Servicecmpt.	561247	male
L93.A	Engine_Cmpt.	563069	female	L185.A	Servicecmpt.	561539	male
L93.B	Engine_Cmpt.	563069	female	L185.B	Servicecmpt.	561539	male
L94.A	Engine_Cmpt.	563069	female	L186.A	Dash	561539	male
L94.B	Engine_Cmpt.	563069	female	L186.B	Dash	561539	male
L95	Outside_Front_LH	562485	male	L187	Engine_Cmpt	561690	male
L95A	Outside_Front_LH	562485	male	L188	Service_Cmpt	562486	female
L96	Outside_Front_RH	562485	male	L193.A	Dash	560488	female
L96A	Outside_Front_RH	562485	male	L193.B	Dash	560488	female
L97.A	Outside_Front_LH	563069	female	L194.A	Dash	562019	female
L97.B	Outside_Front_LH	563069	female	L194.B	Dash	560488	female
L98.A	Entrance_Door	563069	female	L195.A	Dash	560488	female
L98.B	Outside_Front_RH	563069	female	L195.B	Dash	560488	female
L140	Lavatory	561247	male	L199	Enginecmpt.	562848	male
L141	Upper_front	561247	male	L201	Upper_front	561247	male
L142	Lavatory	562006	male	L202	Upper_front	561247	male
L143	Parcel_rack	561186	male	L203	RH_Console	561690	male
L144	Parcelrack	561186	male	L204	Parcel_Rack_RH	562803	male
L145	Parcelrack	561186	male	L205	Enginecmpt.	562485	male
L146	Parcelrack	561186	male	L206	Parcel_Rack_RH	562803	male
L147	Parcelrack	561186	male	L211	Entrace_Door_step	562486	female
L148	Parcelrack	561186	male	L212	outside_rear_LH_RH	563589	male
L149	Parcelrack	561186	male	L213	outside_rear_LH_RH	563589	male
L150	Parcelrack	561186	male	L214	outside_rear_LH_RH	563589	male
L151	Parcelrack	561186	male	L243	Parcelrack	561186	male
L152	Parcelrack	561186	male	L244	Parcelrack	561186	male
L153	Parcelrack	561186	male	L245	Parcelrack	561186	male
L154	Parcelrack	561186	male	L246	Parcelrack	561186	male
L155	Parcelrack	561186	male	L247	Parcel_rack	561186	male

CONNECTORS LIST

No	Location	Part #	Gender	No	Location	Part #	Gender
L248	Parcelrack	561186	male	L660_2	Rear_Galley	560898	male
L249	Parcelrack	561186	male	L660_3	Rear_Galley	560898	male
L250	Parcel_rack	561186	male	L661.A	Rear_Galley	560081	female
L251	Parcel_rack	561186	male	L661.B	Rear_Galley	560081	female
L252	Parcelrack	561186	male	Mic_Driver_1.A	Parcel_rack	560999	male
L253	Parcel_rack	561186	male	Mic_Driver_2.A	Parcel_rack	560999	male
L254	Parcelrack	561186	male	Mic_Driver_3.A	Parcel_rack	560999	male
L255	Parcel_rack	561186	male	Mic_Guide_1.A	Parcel_rack	560999	male
L256	Parcelrack	561186	male	Mic_Guide_2.A	Parcel_rack	560999	male
L257	Parcelrack	561186	male	Mic_Guide_3.A	Parcel_rack	560999	male
L258	Parcel_rack	561186	male	Mo.10	Parcel_rack	561515	male
L282	Engine_Cmpt	561690	male	Mo.10	Parcel_rack	561552	female
L285.A	Rear_Vehicle	562835	female	Mo.11	Parcel_rack	561515	male
L285.B	Rear_Vehicle	562834	male	Mo.11	Parcel_rack	561552	female
L286.A	Rear_Vehicle	562835	female	Mo3	Dash	561667	female
L286.B	Rear_Vehicle	562834	male	Mo4	Dash	562076	male
L290	Engine_door	562565	female	Mo5	Upper_front	561550	male
L291	Engine_door	562565	female	Mo6	Front_vehicle	561690	male
L298A	Enginecmpt.	563590	female	Mo7	Cond_Cmpt	563691	male
L306	RJBcmpt.	561247	male	Mo8	Cond_Cmpt	563691	male
L309.	Rear_LH_Lugg	564576	male	Mo10	Parcel_rack	561515	male
L309D.	Drivers_Area	564576	male	Mo11	Parcel_rack	561515	male
L310.	Rear_LH_Lugg	564576	male	Mo12	Engine_Cmpt	561690	male
L310D.	Drivers_Area	564576	male	Mo13	Engine_Cmpt	561690	female
L314	Front_vehicle	562789	male	Mo14	Engine_Cmpt	561566	female
L315	Front_vehicle	562789	male	Mo15	Front_Ceiling	560900	female
L319	Under_WCL_platform	561247	male	Mo16	Front_Ceiling	560900	female
L320	Drivers_Area	561247	male	Mo17	RH_Console	563626	male
L350A.A	Rearaxlecmpt.	564552	male	Mo18	Fr_Service_Door	562474	male
L350A.B	Rearaxlecmpt.	563340	male	Mo19	Fr_Service_Door	562474	male
L350A.C	Rearaxlecmpt.	562251	male	Mo20	Fr_Service_Door	562474	male
L600	Luggage_Cmpt	562155	male	Mo21	Upper_front	561186	male
L601	Luggage_Cmpt	562155	male	Mo22	RH_Console	561186	male
L602	Luggage_Cmpt	562155	male	Mo24	RH_Console	562348	female
L603	Luggage_Cmpt	562155	male	Mo25	RH_Console	562348	female
L604	Luggage_Cmpt	562155	male	Mo27	Cond_Cmpt	563691	male
L605	Luggage_Cmpt	562155	male	Mo28	Cond_Cmpt	563691	male
L606	Luggage_Cmpt	562155	male	Mo54	Service_Cmpt	562474	male
L607	Luggage_Cmpt	562155	male	Mo61	Parcel_rack	561248	female
L634	Aisle_Section	560898	male	Mo62	FrontHatch	562486	female
L635	Aisle_Section	560898	male	Mo63	RearHatch	562486	female
L650.A	Aisle_Section	560898	male	Mo65	Enginecmpt.	568089	male
L660_1	Rear_Galley	560898	male	Mo67	Enginecmpt.	568089	male

CONNECTORS LIST

No	Location	Part #	Gender	No	Location	Part #	Gender
Mo68	Enginecmpt.	568089	male	R47	Parcelrack	564496	male
Mo69	Enginecmpt.	568089	male	R72	5th_Bay	563409	male
Mo70	Enginecmpt.	568089	male	R73	5th_Bay	563409	male
Mo71	Enginecmpt.	568089	male				
Mo72	Enginecmpt.	568089	male	R210	Parcel_rack	560525	male
Mo73	Enginecmpt.	568089	male	R_12VISS	Parcel_rack	564496	male
PC1	FJB	562650	male	Res3.A	ParcelRack	563590	female
PC1	FJB	562649	female	Res4	RH_Console	563590	female
PF	FJB	561782	male	Res6	FJB	563590	female
PF	FJB	561781	female	Res6A	FJB	563589	male
PF1	Passenger_Area	561782	male	Res6A	FJB	563590	female
PF1	Passenger_Area	561781	female	Res6B	FJB	563589	male
PF1A	Passenger_Area	561782	male	Res6B	FJB	563590	female
PF1A	Passenger_Area	561781	female	Res7	dash	563590	female
Pot1.A	Dash	560488	female	Res15	Engine_Cmpt	561782	male
Pot1.B	Dash	560488	female	Res31	Ureacmpt.	562350	male
Pot1.C	Dash	560488	female	Res32	Ureacmpt.	563764	female
Pot2	Dash	561550	male	Res46	FJB	563590	female
PR	Parcelrack	561782	male	Res53	dash	563590	female
PR	Parcelrack	561781	female	Res99	dash	563590	female
PR1	Passenger_Area	561782	male	Se2	Service_Cmpt	561566	female
PR1	Passenger_Area	561781	female	Se4	Window_RH	561477	female
PR1A	Passenger_Area	561782	male	Se5	Window_RH	561477	female
PR1A	Passenger_Area	561781	female	Se6	Window_RH	561477	female
R3	RJB	563409	male	Se7	Window_LH	561477	female
R4	FJB	564496	male	Se8	Window_LH	561477	female
R5	RJB	564496	male	Se9	Window_LH	561477	female
R12	Evap_Cmpt	563409	male	Se10	FJB	561477	female
R16	RJB	564496	male	Se11.A	Cond_Cmpt	560082	female
R20	RJB	564496	male	Se11.B	Cond_Cmpt	560082	female
R21	FJB	560525	male	Se11.C	Cond_Cmpt	560082	female
R23A	FJB	564496	male	Se13	Engine_Cmpt	562350	male
R26	Evap_Cmpt	564496	male	Se14.A	Driver_Area	561782	male
R27	Dash	564496	male	Se14.B	Driver_Area	561781	female
R28	FJB	564496	male	Se15	RH_Console	560898	male
R29	RJB	563409	male	Se17	Entrace_Door	560081	female
R30	FJB	564496	male	Se18	Servicecmpt.	561566	female
R31	FJB	564496	male	Se19_P	Service_Cmpt	563677	male
R34	RJB	564210	male	Se19_S	Service_Cmpt	563677	male
R36	Dash	564496	male	Se20	Evap_Cmpt	562426	male
R37	Dash	564496	male	Se21	Dash	561248	female
R38	FJB	564496	male	Se23	Engine_Cmpt	563159	male
R40	RJB	564496	male	Se24	Evap_Cmpt	563758	female

CONNECTORS LIST

No	Location	Part #	Gender	No	Location	Part #	Gender
Se25	Passenger_Area	561248	female	So8	Servicecmpt.	641385	male
Se28	Pneumatic_plate	561690	male	So9	Enginecmpt.	560016	female
Se29	Engine_Cmpt	561566	female	So10	Cond_Cmpt	562485	male
Se30	Enginedoor	562877	female	So11	Cond_Cmpt	561566	female
Se31	Enginedoor	562877	female	So13	Evap_Cmpt	563204	female
Se32	Rear_Axle_Cmpt	562426	male	So14	Servicecmpt.	641385	male
Se33	Rear_Axle_Cmpt	562856	male	So15	Servicecmpt.	641385	male
Se34	Rear_Axle_Cmpt	562426	male	So16	Servicecmpt.	641385	male
Se35	Rear_Axle_Cmpt	562426	male	So17	Servicecmpt.	562848	male
Se36	Rear_Axle_Cmpt	562427	male	So18	Pneumatic_plate	641385	male
Se37	Front_Axle_LH	641132	female	So19	Pneumatic_plate	641385	male
Se38	Front_Axle_RH	641132	female	So20	Servicecmpt.	641385	male
Se39	Rear_Axle_LH	641132	female	So21	Front_Axle_Cmpt	564046	female
Se40	Rear_Axle_LH	641132	female	So22	Front_Axle_Cmpt	564046	female
Se41	Condensor_cmpt.	562877	female	So23	Rear_Axle_Cmpt	564046	female
Se45	Servicecmpt.	563409	male	So24	Rear_Axle_Cmpt	564046	female
Se46	Rearaxlecmpt.	562348	female	So27	Rearaxlecmpt.	564045	female
Se49	Engine_Cmpt	561690	male	So50	Rearaxlecmpt.	564046	female
Se51	Driverseat	563589	male	So52	Rearaxlecmpt.	564045	female
Se53	Service_Cmpt	563159	female	So54	Enginecmpt.	564045	female
Se54	Service_Cmpt	563159	female	So70	Rear_Axle_Cmpt	561566	female
Se55	Service_Cmpt	563159	female	spBar4	Enginecmpt.	564135	male
Se56	WCLdoor	562479	female	spBar5	Enginecmpt.	564135	male
Se60	Service_Cmpt	563409	male	spBar6	Enginecmpt.	564135	male
Se63	Rearaxlecmpt.	641132	female	spBar7	Enginecmpt.	564135	male
Se64	Rearaxlecmpt.	641132	female	spBar11	Engine_Cmpt.	564135	male
Se65	Dash	564042	female	spBar12	Engine_Cmpt.	564135	male
Se66	FJB	564039	female	spBar13	Enginecmpt.	564135	male
Se67	Frontaxlecmpt.	563159	female	spBar14	Enginecmpt.	564135	male
Se69	Frontaxlecmpt.	563159	female	spBar15	Enginecmpt.	564135	male
Se74	Rear_Axle_Cmpt	563340	male	spBar16	Enginecmpt.	564135	male
Se79	Front_Axle	563340	male	spBar19	Condensorcmpt.	564135	male
Se89	EngineCmpt	562350	male	spBar20	Condensorcmpt.	564135	male
Se94	WCLdoor	562877	female	spBar21	Condensorcmpt.	564135	male
Se100	WCLdoor	562479	female	spBar22	Enginecmpt.	564135	male
				spBar23	Enginecmpt.	564135	male
				spBar24	Enginecmpt.	564135	male
shell1_1618	Driver_Area	562471	male	spBar26	Rear_RH_Axle_Cmpt	564135	male
So3	RH_Console	641385	male	spBar27	Rear_RH_Axle_Cmpt	564135	male
So4	RH_Console	641385	male	Spk1_L	Parcel_Rack_LH	563994	male
So5	RH_Console	641385	male	Spk1_R	Parcel_Rack_RH	563994	male
So6	RH_Console	641385	male	Spk2_L	Parcel_Rack_LH	563994	male
So7	Service_Cmpt	561566	female	Spk2_R	Parcel_Rack_RH	563994	male

CONNECTORS LIST

No	Location	Part #	Gender	No	Location	Part #	Gender
Spk3_L	Parcel_Rack_LH	563994	male	Sw16	Dash	562763	male
Spk3_R	Parcel_Rack_RH	563994	male	Sw17	Dash	562763	male
Spk4_L	Parcel_Rack_LH	563994	male	Sw18A	LH_Console	562763	male
Spk4_R	Parcel_Rack_RH	563994	male	Sw20	Dash	562763	male
Spk5_L	Parcel_Rack_LH	563994	male	Sw21	Dash	562763	male
Spk5_R	Parcel_Rack_RH	563994	male	Sw24	Dash	562763	male
Spk6_L	Parcel_Rack_LH	563994	male	Sw25	Dash	562763	male
Spk6_R	Parcel_Rack_RH	563994	male	Sw26	Dash	562763	male
Spk7_L	Parcel_Rack_LH	563994	male	Sw27	Dash	562763	male
Spk7_R	Parcel_Rack_RH	563994	male	Sw29	Dash	562763	male
Spk8_L	Parcel_Rack_LH	563994	male	Sw30	RJB	563135	male
Spk8_R	Parcel_Rack_RH	563994	male	Sw32	Dash	561477	female
Spk9_L	Parcel_Rack_LH	563994	male	Sw33	Dash	561476	male
Spk9_R	Parcel_Rack_RH	563994	male	Sw34	Outside_Front_RH	562477	male
Spk10_L	Parcel_Rack_LH	563994	male	Sw35	Console	562763	male
Spk10_R	Parcel_Rack_RH	563994	male	Sw38	LH_Console	562763	male
Spk11_L	Parcel_Rack_LH	563994	male	Sw39.A	RJB	562403	female
Spk11_R	Parcel_Rack_RH	563994	male	Sw39.B	RJB	562403	female
Spk12_L	Parcel_Rack_LH	563994	male	Sw40	LH_Console	561690	male
Spk12_R	Parcel_Rack_RH	563994	male	Sw41	LH_Console	562749	male
Spk13_L	Parcel_Rack_LH	563994	male	Sw42	Lugg_Cmpt	561636	female
Spk13_R	Parcel_Rack_RH	563994	male	Sw43	LH_Console	561690	male
Spk14_L	Parcel_Rack_LH	563994	male	Sw44.A	FJB	562403	female
Spk14_R	Parcel_Rack_RH	563994	male	Sw44.B	FJB	562403	female
Spk15_L	Parcel_Rack_LH	563994	male	Sw45.A	5th_Lugg_Cmpt	562485	male
Spk15_R	Parcel_Rack_RH	563994	male	Sw45.B	5th_Lugg_Cmpt	562486	female
Spk16_L	Parcel_Rack_LH	563994	male	Sw46.A	5th_Lugg_Cmpt	562485	male
Spk16_R	Parcel_Rack_RH	563994	male	Sw46.B	5th_Lugg_Cmpt	562486	female
Spk16_R_Lav	Lavatory	563994	male	Sw47.A	3rd_Lugg_Cmpt	562485	male
SpkDr_L	Parcel_Rack_LH	563994	male	Sw47.B	3rd_Lugg_Cmpt	562486	female
SpkDr_R	Parcel_Rack_RH	563994	male	Sw48.A	3rd_Lugg_Cmpt	562485	male
Sub1.A	Passenger_Area	564004	female	Sw48.B	3rd_Lugg_Cmpt	562486	female
Sub2.A	Passenger_Area	564004	female	Sw49.A	2nd_Lugg_Cmpt	562485	male
Sw1.C258	Driver_Area	561188	female	Sw49.B	2nd_Lugg_Cmpt	562486	female
Sw1.C259	Driver_Area	561186	male	Sw50.A	2nd_Lugg_Cmpt	562485	male
Sw2	Dash	562763	male	Sw50.B	2nd_Lugg_Cmpt	562486	female
Sw3	Dash	562763	male	Sw51.A	1st_Lugg_Cmpt	562485	male
Sw4	Dash	562763	male	Sw51.B	1st_Lugg_Cmpt	562486	female
Sw5	Dash	562763	male	Sw52.A	1st_Lugg_Cmpt	562485	male
Sw6	Dash	562763	male	Sw52.B	1st_Lugg_Cmpt	562486	female
Sw10A	LH_Console	562763	male	Sw55.A	Lavatory	560488	female
Sw12	Dash	562763	male	Sw55.B	Lavatory	560488	female
Sw14	Dash	562763	male	Sw56.A	Lavatory	560488	female

CONNECTORS LIST

No	Location	Part #	Gender	No	Location	Part #	Gender
Sw56.B	Lavatory	560488	female	Sw663	Rear_Galley	562763	male
Sw58	Engine_Cmpt.	563135	male	Sw670	dash	562763	male
Sw59	Enginecmpt.	563135	male	sym698_166.A	Parcel_rack	564489	female
Sw63A	LHConsole	562763	male	sym698_166.B	Parcel_rack	562706	female
Sw64.A	Service_Cmpt	560815	female	sym698_166.C	Parcel_rack	562706	female
Sw64.B	Service_Cmpt	560815	female	sym699_166.A	Parcel_rack	564489	female
				sym699_166.B	Parcel_rack	562706	female
Sw82	RJB	563135	male	sym699_166.C	Parcel_rack	562706	female
Sw83.A	Dash	560082	female	sym700_166.A	Parcel_rack	564489	female
Sw83.B	Dash	560815	female	sym700_166.B	Parcel_rack	562706	female
Sw83.C	Dash	560082	female	sym700_166.C	Parcel_rack	562706	female
Sw83.D	Dash	560815	female				
Sw85	LH_Console	562749	male				
Sw95.A	WCLdoor	562615	female				
Sw95.B	WCLdoor	562615	female	sym812_291.A	Parcelrack	565180	female
Sw95.C	WCLdoor	562615	female				
Sw96.A	WCL_Door	562615	female				
Sw96.B	WCL_Door	562615	female				
Sw96.C	WCLdoor	562615	female				
Sw97.A	WCLsystem	562615	female				
Sw97.B	WCLsystem	562615	female	tab69	Parcelrack	561626	N/A
Sw97.C	WCLsystem	562615	female	Tab70a	Parcelrack	561626	N/A
Sw98.A	WCLsystem	562615	female	Tab70b	Parcelrack	561626	N/A
Sw98.B	WCLsystem	562615	female	tab71a	Parcelrack	561626	N/A
Sw98.C	WCLsystem	562615	female	Tab600	Parcelrack	561904	N/A
Sw100	dash	562763	male	Tab601	Parcelrack	561108	N/A
Sw107	dash	562763	male	Tab602	Parcelrack	561108	N/A
Sw108	dash	562763	male	Tab603	Parcelrack	561108	N/A
Sw124	Dash	562763	male	Tab604	Parcelrack	561108	N/A
Sw125.A	Service_Cmpt	561457	female	TermA43J1_21	FJB	564629	N/A
Sw125.B	Service_Cmpt	561457	female	TermA43J2_13	FJB	564629	N/A
				TermA52J1_6	RJB	564629	N/A
Sw137	Dash	562763	male	TermA52J1_16	RJB	564629	N/A
Sw149	Dash	562763	male	TermL150	Parcel_rack	562505	N/A
Sw156	LH_Console	562763	male	TermL248	Parcel_rack	562505	N/A
Sw157	Dash	562763	male	Tstat_26.A	Evap_Cmpt	560079	N/A
Sw158	Dash	562763	male	VECF1	FJB	563186	male
Sw162	Dash	562763	male	VECF2	FJB	563183	male
Sw221	Dash	562763	male	VECF3	FJB	563185	male
Sw619	Dash	562763	male	VECF4	FJB	563182	male
Sw629	Dash	562763	male	VECF9	FJB	563448	male
Sw660	Rear_Galley	562763	male	VECF10	FJB	563181	male
Sw661	Rear_Galley	562763	male	VECF11	FJB	563184	male

CONNECTORS LIST

No	Location	Part #	Gender				
VECF12	FJB	563187	male				
VECR1	RJB	563186	male				
VECR2	RJB	563183	male				
VECR3	RJB	563185	male				
VECR4	RJB	563182	male				
VECR4.	RJB	563182	male				
VECR9	RJB	563448	male				
VECR10	RJB	563181	male				
VECR11	RJB	563184	male				
VECR12	RJB	563187	male				
VECT3	Rear_vehicule	563718	male				
VECT4	Rear_vehicule	563714	male				
Y80	Engine_Cmpt	563789	male				
Y81	Cond_Cmpt	563793	male				

CONNECTORS LIST

No	Location	Part #	Gender	No	Location	Part #	Gender
24SS_OP	Parcel_Rack_LH	563071	male	A34.K	Enginecmpt.	564270	male
24SS_OP	Parcel_Rack_LH	563040	female	A34.L	Enginecmpt.	564269	male
24SS_OP_2	Parcel_Rack_LH	563071	male	A36.JA	FJB	562767	male
24SS_OP_2	Parcel_Rack_LH	563040	female	A36.JB	FJB	562765	male
120V_inlet	Rearvehicule	561572	male	A36.JC	FJB	562957	male
A1	RJB	563975	male	A39.P101	Parcel_Rack_LH	563201	male
A2	FJB	563984	male	A39.P901	Parcel_Rack_LH	563953	male
A3	Dash	562363	male	A40		563884	male
A4.A	Service_Cmpt	562428	female	A41.J1	FJB	563679	male
A4.B	Service_Cmpt	561188	female	A41.J2	FJB	564037	male
A5	Service_Cmpt	562428	female	A41.J3	FJB	564004	male
A6	Engine_Cmpt	562427	male	A60.A	Parcel_Rack_LH	563071	male
A7	Rear_Axle_Cmpt	563979	male	A60.B	Parcel_Rack_LH	562706	female
A9.Cx1	FJB	564041	female	A60.C	Parcel_Rack_LH	901110	male
A9.Cx2	FJB	563678	male	A60.D	Parcel_Rack_LH	901110	male
A9.Cx3	FJB	564037	female	A61.A	Parcel_Rack_LH	562464	male
A9.Cx4	FJB	564038	female	A61.B	Parcel_Rack_LH	562465	male
A10.X1	Engine_Cmpt	563135	male	A65.A	Parcel_Rack_LH	563025	male
A10.X3	Engine_Cmpt	563134	female	A65.B4	Parcel_Rack_LH	bidon	male
A11	LH_Console	563142	male	A65.B5	Parcel_Rack_LH	bidon	male
A14.A		562766	male	A65.B6	Parcel_Rack_LH	bidon	male
A14.B		562767	male	A65.D	Parcel_Rack_LH	bidon	male
A14.C		562765	male	A65.E	Parcelrack	563071	male
A15	Dash	562464	male	A65.G1	Parcel_Rack_LH	563071	male
A17.D	RJB	561932	male	A65.G2	Parcel_Rack_LH	563071	male
A18.J1	FJB	562794	male	A65.G3	Parcel_Rack_LH	563071	male
A18.J2	FJB	562650	male	A65.H1	Parcel_Rack_LH	561716	female
A19	LH_Console	562878	female	A65.H2	Parcel_Rack_LH	561716	female
A20	Parcel_Rack_LH	561477	female	A65.H3	Parcel_Rack_LH	561716	female
A24.A	RH_Console	561890	male	A65.J	Parcel_Rack_LH	562465	male
A24.B	RH_Console	561566	female	A69L.A	Parcel_Rack_LH	563025	male
A24.C	RH_Console	561889	female	A69L.B1	Parcel_Rack_LH	bidon	male
A25	Parcel_Rack_LH	563025	male	A69L.B2	Parcel_Rack_LH	bidon	male
A26.P1	Enginecmpt.	562350	male	A69L.B3	Parcel_Rack_LH	bidon	male
A26.P2	Enginecmpt.	563322	female	A69L.B4	Parcel_Rack_LH	bidon	male
A26.P4	Enginecmpt.	568088	male	A69L.C	Parcel_Rack_LH	bidon	male
A27	Service_Cmpt	562929	male	A69R.A	Parcel_Rack_LH	563025	male
A28	Service_Cmpt	562928	male	A69R.B1	Parcel_Rack_LH	bidon	male
A29.	Dash	562464	male	A69R.B2	Parcel_Rack_LH	bidon	male
A29.	Dash	565871	female	A69R.B3	Parcel_Rack_LH	bidon	male
A33.A	Parcel_Rack_LH	563071	male	A69R.B4	Parcel_Rack_LH	bidon	male
A33.B	Parcel_Rack_LH	562330	female	A69R.C	Parcel_Rack_LH	bidon	male
A34.J	Enginecmpt.	568118	male	A70a		561540	female

CONNECTORS LIST

No	Location	Part #	Gender	No	Location	Part #	Gender
A70b		561540	female	A121.Vsb	Dash	563678	male
A77	Parcelrack	564547	male	A121.Vsc	Dash	564037	male
A78	Parcelrack	562583	female	A121.Vsd	Dash	564118	male
A79	Parcelrack	562583	female	A122.A		563960	male
A80	Parcelrack	562479	female	A122.B		563962	male
A81.JA	FJB	562767	male	A122.C1		563956	male
A81.JB	FJB	562765	male	A122.C2		563957	male
A81.JC	FJB	562957	male	A122.C3		563958	male
A83.A		565970	female	A123.A		563960	male
A95.A	Parcelrack	564489	female	A123.B		563962	male
A95.B	Parcelrack	562706	female	A123.C1		563956	male
A95.C	Parcelrack	562706	female	A123.C2		563957	male
A96.A	FJB	564205	male	A123.C3		563958	male
A97	Dash	563226	male	A124.A		563960	male
A97A	FJB	563226	male	A124.B		563962	male
A97A	FJB	563613	female	A124.C1		563956	male
A97B	FJB	563226	male	A124.C2		563957	male
A97B	FJB	563613	female	A124.C3		563958	male
A97S.A1	Dash	564401	male	A130	Driver_Area	563226	male
A97S.A2	Dash	564402	male	A131.A	Engine_Cmpt	561782	male
A97S.A3	Dash	564403	male	A131.B	Engine_Cmpt	561781	female
A99	FJB	564205	male	A137A	Condensercmpt.	20429843	male
A100	Front_axle_cmpt	563632	male	A138	Cond_Cmpt	563787	male
A101	Rear_axle_cmpt	563632	male	A139	Dash	564501	male
A102	Rear_axle_cmpt	563632	male	A150	Parcelrack	21280133	male
A103	Dash	562070	female	A152.A	Parcelrack	561550	male
A107	EngineCmpt.	560336	male	A152.B	Parcelrack	563071	male
A108	RJB	562766	male	A152.C	Parcelrack	563071	male
A109A	FJB	564141	male	A152.D	Parcelrack	563071	male
A111	RJB	562550	female	A152.E	Parcelrack	563071	male
A113.A	Parcel_Rack_LH	563960	male	A152.F	Parcelrack	563071	male
A113.B	Parcel_Rack_LH	563962	male	A152.G	Parcelrack	563071	male
A113.C1	Parcel_Rack_LH	563956	male	A152.H	Parcelrack	563071	male
A113.C2	Parcel_Rack_LH	563957	male	A152.I	Parcelrack	563071	male
A113.C3	Parcel_Rack_LH	563958	male	A152.J	Parcelrack	563071	male
A114A	Dash	564252	male	A152.K	Parcelrack	562779	male
A116.A		563872	female	A152.L	Parcelrack	562779	male
A120.A	Dashboard	563960	male	A162.		561637	male
A120.B	Dashboard	563962	male	A162.A	FrontCab	561566	female
A120.C1	Dashboard	563956	male	A162.B	FrontCab	561782	male
A120.C2	Dashboard	563957	male	A164.A	RH_trapezoidal_window	561566	female
A120.C3	Dashboard	563958	male	A164.B	RH_trapezoidal_window	561782	male
A121.Vsa	Dash	563679	male	A165		560641	male

CONNECTORS LIST

No	Location	Part #	Gender	No	Location	Part #	Gender
A166	RearCab	561637	male	AE46.J1	FJB	563679	male
A222M.A		563040	female	AE46.J2	FJB	564037	female
A222M.B		565871	female	AE46.J3	FJB	565957	male
A222M.C		564537	female	AE47.J1	RH_console	563679	male
A222W.A		563409	male	AE47.J2	RH_console	564037	female
A222W.B		563409	male	AE47.J3	RH_console	565957	male
A223M.A		563040	female	AE48.J1	RH_console	563679	male
A223M.B		565871	female	AE48.J2	RH_console	564037	female
A223M.C		564537	female	AE48.J3	RH_console	565957	male
A223W.A		563409	male	AE49..J1	RJB	563679	male
A223W.B		563409	male	AE49..J2	RJB	564037	male
A309.A		564576	male	AE49..J3	RJB	565957	male
A309.B		564576	male	AE49.J1	RJB	563679	male
A309.C		561566	female	AE49.J2	RJB	564037	male
A310.A		564576	male	AE49.J3	RJB	565957	male
A310.B		564576	male	AE50..J1	RJB	563679	male
A310.C		561566	female	AE50..J2	RJB	564037	male
A614.A	Parcelrack	561550	male	AE50..J3	RJB	565957	male
A614.C1	Parcelrack	563071	male	AE50.J1	RJB	563679	male
A614.C2	Parcelrack	563071	male	AE50.J2	RJB	564037	male
A614.C3	Parcelrack	563071	male	AE50.J3	RJB	565957	male
A614.C4	Parcelrack	563071	male	AE51.J1	RJB	563679	male
A614.C5	Parcelrack	563071	male	AE51.J2	RJB	564037	female
A614.C6	Parcelrack	563071	male	AE51.J3	RJB	565957	male
A614.I/O	ParcelRack	bidon	male	AE52..J1	RJB	563679	male
A614.P1	Parcelrack	562783	male	AE52..J2	RJB	564037	male
A614.P2	Parcelrack	562783	male	AE52..J3	RJB	565957	male
A614.P3	Parcelrack	562783	male	AE52.J1	RJB	563679	male
AE41.J1	FJB	563679	male	AE52.J2	RJB	564037	female
AE41.J2	FJB	564037	female	AE52.J3	RJB	565957	male
AE41.J3	FJB	564004	male	AE53.J1	LH_ParcelRack	563679	male
AE42.J1	FJB	563679	male	AE53.J2	LH_ParcelRack	564037	female
AE42.J2	FJB	564037	female	AE53.J3	LH_ParcelRack	565957	male
AE42.J3	FJB	564004	male	AE54.J1	Evaporatorcmpt.	563679	male
AE43.J1	FJB	563679	male	AE54.J2	Evaporatorcmpt.	564037	female
AE43.J2	FJB	564037	male	AE54.J3	Evaporatorcmpt.	565957	male
AE43.J3	FJB	565957	male	AE55.J1	Dash	563679	male
AE44.J1	FJB	563679	male	AE55.J2	Dash	564037	female
AE44.J2	FJB	564037	female	AE55.J3	Dash	564004	male
AE44.J3	FJB	565957	male	AE56.J1	Dash	563679	male
AE45.J1	FJB	563679	male	AE56.J2	Dash	564037	male
AE45.J2	FJB	564037	female	AE56.J3	Dash	564004	male
AE45.J3	FJB	565957	male	AE57.J1	WCLcmpt.	563679	male

CONNECTORS LIST

No	Location	Part #	Gender	No	Location	Part #	Gender
AE57.J2	WCLcmpt.	564037	male	C5S	FJB	563590	female
AE57.J3	WCLcmpt.	564004	male	C6	FJB	563582	male
AltLL.A	Enginecmpt.	563746	female	C6	FJB	563583	female
AltLL.B	Enginecmpt.	560815	female	C7	Service_Cmpt	562581	male
AltLL.C	Enginecmpt.	564469	female	C7	Service_Cmpt	562583	female
AltLR.A	enginecmpt.	563746	female	C8	FJB	563227	male
AltLR.B	Enginecmpt.	560815	female	C8	FJB	563614	female
AltLR.C	Enginecmpt.	564469	female	C9	RJB	561986	male
AltUR.A	Enginecmpt.	563746	female	C9	RJB	561987	female
AltUR.B	Enginecmpt.	560815	female	C10	Engine_Cmpt	562581	male
AltUR.C	Enginecmpt.	564469	female	C10	Engine_Cmpt	562583	female
B85	Engine_Cmpt	563815	male	C11	Service_Cmpt	563580	male
B96	Engine_Cmpt	563821	male	C11	Service_Cmpt	563581	female
B96B	Engine_Cmpt	563823	male	C12	Engine_Cmpt	562581	male
B97	Engine_Cmpt	563816	male	C12	Engine_Cmpt	562583	female
B98	Engine_Cmpt	563817	male	C13_plug	RH_Console	563589	male
B99	Engine_Cmpt	563815	male	C13_socket	RH_Console	563590	female
B115A	Enginecmpt.	564226	male	C13S	RH_Console	563589	male
B142C	Condensercmpt.	563793	male	C13S	RH_Console	563590	female
B310	Enginecmpt.	565967	male	C15A	EvaporatorCmpt	568110	male
C1	FJB	563589	male	C15A	EvaporatorCmpt	568109	female
C1	FJB	563590	female	C16	RJB	561577	male
C1S	FJB	563589	male	C16	RJB	561605	female
C1S	FJB	563590	female	C17	RJB	560195	male
C2	Service_Cmpt	563580	male	C17	RJB	560169	female
C2	Service_Cmpt	563581	female	C18	FJB	561986	male
C2A	FJB	563580	male	C18	FJB	561987	female
C2A	FJB	563581	female	C19	RJB	561986	male
C2B	FJB	564034	male	C19	RJB	561987	female
C2B	FJB	564035	female	C20A	Evap_Cmpt	562485	male
C3_plug	RJB	563589	male	C20A	Evap_Cmpt	562486	female
C3_socket	RJB	563590	female	C20B	Evap_Cmpt	562485	male
C3AP	FJB	563589	male	C20B	Evap_Cmpt	562486	female
C3AP	FJB	563590	female	C23	Evaporatorcmpt.	564034	male
C3AS	FJB	563589	male	C23	Evaporatorcmpt.	564035	female
C3AS	FJB	563590	female	C24_plug	Evap_Cmpt	561690	male
C3S	RJB	563593	male	C24_socket	Evap_Cmpt	561566	female
C3S	RJB	563590	female	C25	Parcel_Rack_LH	561550	male
C4	FJB	563580	male	C25	Parcel_Rack_LH	561667	female
C4	FJB	563581	female	C26	Ureacmpt.	563226	male
C5	FJB	563589	male	C26	Ureacmpt.	563613	female
C5	FJB	563590	female	C26A	Ureacmpt	568110	male
C5S	FJB	563589	male	C26A	Ureacmpt	568109	female

CONNECTORS LIST

No	Location	Part #	Gender	No	Location	Part #	Gender
C26B	Ureacmpt.	563227	male	C54	Engine_Cmpt.	563613	female
C26B	Ureacmpt.	563614	female	C54A	Ureacmpt	568110	male
C29	4rd_Lugg_Cmpt	563651	male	C54A	Ureacmpt	568109	female
C29	3rd_Lugg_Cmpt	563652	female	C54B	Engine_Cmpt.	562477	male
C30	3rd_Lugg_Cmpt	561710	male	C54B	Engine_Cmpt.	562479	female
C30	3rd_Lugg_Cmpt	561709	female	C55	Evap_Cmpt	561577	male
C31W	Parcelrack	563227	male	C55	Evap_Cmpt	561605	female
C31W	Parcelrack	563614	female	C59	RJB	561643	male
C32	lavatory	561734	male	C59	RJB	561642	female
C32	Lavatory	561735	female	C63	Entrace_Door	562581	male
C32W	WCLcmpt.	561669	male	C63	Entrace_Door	562583	female
C32W	WCLcmpt.	561670	female	C64	Engine_Cmpt	568110	male
C33	WCLcmpt.	564034	male	C64	Engine_Cmpt	568109	female
C33	WCLcmpt.	564035	female	C64X	Aisle_section	560898	male
C34	RH_Console	561986	male	C64X	Aisle_section	560900	female
C34	RH_Console	561987	female	C66_plug	Evap_Cmpt	561577	male
C36	FJB	561986	male	C66_socket	Evap_Cmpt	561605	female
C36	FJB	561987	female	C67	Parcelrack	561734	male
C37.	Parcel_Rack_LH	561734	male	C67	Parcelrack	561735	female
C37.	Parcel_Rack_LH	561735	female	C69_plug	FJB	561690	male
C38.	Parcelrack	561734	male	C69_socket	FJB	561566	female
C38.	Parcelrack	561735	female	C70	FJB	562557	male
C39	Parcelrack	562503	male	C70	FJB	562558	female
C39	Parcelrack	562507	female	C71	FJB	561646	male
C39A	Firesuppressioncmpt.	561782	male	C71	FJB	561645	female
C39A	Firesuppressioncmpt.	561781	female	C72	FJB	561646	male
C40	Dash	562485	male	C72	FJB	561645	female
C40	Dash	562486	female	C74	FJB	561645	female
C41	RJB	561782	male	C74	FJB	561646	male
C41	RJB	561781	female	C87	Engine_Cmpt	562485	male
C44_plug	FJB	561577	male	C87	Engine_Cmpt	562486	female
C44_socket	FJB	561605	female	C88	WCL_Cmpt.	563226	male
C45	FJB	561643	male	C88	WCL_Cmpt.	563613	female
C45	FJB	561642	female	C90	RJB	563582	male
C46	3rdlugg.cmpt.	562549	male	C90	RJB	563583	female
C46	3rdlugg.cmpt.	562550	female	C91	RJB	562285	male
C47	FJB	565207	male	C91	RJB	562282	female
C48	RJB	565208	male	C94_plug	FJB	563589	male
C49	FJB	562005	male	C94_socket	FJB	563590	female
C49	FJB	561714	female	C96	FJB	561646	male
C50		563933	male	C96	FJB	561645	female
C50		563932	female	C97	FJB	561643	male
C54	Engine_Cmpt.	563226	male	C97	FJB	561642	female

CONNECTORS LIST

No	Location	Part #	Gender	No	Location	Part #	Gender
C99	Enginecmpt.	562581	male	C164AA	RH_Trapezoidal_Window	561566	female
C99	Enginecmpt.	562583	female	C164B	RH_Trapezoidal_Window	561782	male
C100	Evaporatorcmpt.	562477	male	C164B	RH_Trapezoidal_Window	561781	female
C100	Evaporatorcmpt.	562479	female	C164BB	RH_Trapezoidal_Window	561782	male
C100S	Evaporator_Cmpt.	562477	male	C164BB	RH_Trapezoidal_Window	561781	female
C100S	Evaporator_Cmpt.	562479	female	C166		561637	male
C101	Service_Cmpt	561690	male	C166		561636	female
C101	Service_Cmpt	561566	female	C167	FJB	561577	male
C103_plug	FJB	562485	male	C167	FJB	561605	female
C103_socket	FJB	562486	female	C167.		561577	male
C105_plug	FJB	562581	male	C167.		561605	female
C105_socket	FJB	562583	female	C170	LH_Console	561637	male
C106_plug	FJB	562581	male	C170	LH_Console	561636	female
C106_socket	FJB	562583	female	C171	LH_Console	561646	male
C107A	Enginecmpt.	562885	female	C171	LH_Console	561645	female
C107A	Enginecmpt.	562884	female	C175	RJB	563226	male
C107B	Enginecmpt.	562885	female	C175	RJB	563613	female
C107B	Enginecmpt.	562884	female	C175.	RJB	563226	male
C107C	Enginecmpt.	562885	female	C175.	RJB	563613	female
C107C	Enginecmpt.	562884	female	C187	RJB	561577	male
C108	Dash	562557	male	C187	RJB	561605	female
C108	dash	562558	female	C188	Evap_Cmpt	561577	male
C110	Dash	568110	male	C188	Evap_Cmpt	561605	female
C110	Dash	568109	female	C189	RJB	561986	male
C119A	Rear_engine_door	568110	male	C189	RJB	561987	female
C119A	Rear_engine_door	568109	female	C193_plug	RJB	563589	male
C124	DashBoard	562503	male	C193_socket	RJB	563590	female
C124	DashBoard	562507	female	C194	FJB	563589	male
C129		563858	male	C194	FJB	563590	female
C129		563859	female	C195	dash	563347	male
C131A	Engine_Cmpt	561782	male	C195	dash	560489	female
C131A	Engine_Cmpt	561781	female	C195A		563347	male
C131B	Engine_Cmpt	561782	male	C195A		560489	female
C131B	Engine_Cmpt	561781	female	C195B		563347	male
C144	RJB	560852	male	C195B		560489	female
C144	RJB	560851	female	C195C		564222	male
C152	Cond_Cmpt	561611	male	C195C		564224	female
C152	Cond_Cmpt	561610	female	C206	Parcel_Rack_RH	562503	male
C162	FrontCab	561690	male	C206	Parcel_Rack_RH	562507	female
C162	FrontCab	561566	female	C207	Parcel_Rack_LH	562503	male
C164A	RH_Trapezoidal_Window	561690	male	C207	Parcel_Rack_LH	562507	female
C164A	RH_Trapezoidal_Window	561566	female	C213	Parcel_Rack_LH	561515	male
C164AA	RH_Trapezoidal_Window	561690	male	C213	Parcel_Rack_LH	561552	female

CONNECTORS LIST

No	Location	Part #	Gender	No	Location	Part #	Gender
C222	FJB	562477	male	C381	Parcel_Rack	561862	female
C222	FJB	562479	female	C382	Under_Seat	561580	male
C223	FJB	563227	male	C382	Under_Seat	561582	female
C223	FJB	563614	female	C397	RJB	562285	male
C224	FJB	561637	male	C397	RJB	562282	female
C224	FJB	561636	female	C397.	RJB	562285	male
C225	FJB	562650	male	C397.	RJB	562282	female
C225	FJB	562649	female	C430	LH_Console	562363	male
C226	FJB	562650	male	C430	LH_Console	561188	female
C226	FJB	562649	female	C430.		562363	male
C226a_plug	FJB	562650	male	C430.		561188	female
C226a_socket	FJB	562649	female	C430..		562363	male
C279	Service_Cmpt	562477	male	C430..		561188	female
C279	Service_Cmpt	562479	female	C452		561986	male
C279A	Service_Cmpt	562477	male	C452		561987	female
C279A	Service_Cmpt	562479	female	C463	Rearaxlecmpt	568112	male
C284	Parcel_Rack	561782	male	C463	Rearaxlecmpt	568111	female
C284	Parcel_Rack	561781	female	C464	FJB	564222	male
C284_1	Parcel_Rack	561782	male	C464	FJB	564224	female
C284_1	Parcel_Rack	561781	female	C464A	Dash	564222	male
C284_2	Parcel_Rack	561782	male	C464A	Dash	564224	female
C284_2	Parcel_Rack	561781	female	C464B	FJB	564222	male
C284_3	Parcel_Rack	561782	male	C464B	FJB	564224	female
C284_3	Parcel_Rack	561781	female	C465	Parcelrack	562581	male
C284_4	Parcel_Rack	561782	male	C465	Parcelrack	562583	female
C284_4	Parcel_Rack	561781	female	C506	FJB	561687	male
C284_5	Parcel_Rack	561782	male	C506	FJB	561685	female
C284_5	Parcel_Rack	561781	female	C540		562477	male
C284_6	Parcel_Rack	561782	male	C540		562479	female
C284_6	Parcel_Rack	561781	female	C540._plug		562477	male
C298		561611	male	C540._socket		562479	female
C298		561610	female	C541		563226	male
C333	Upper_front	561550	male	C541		563613	female
C333	Upper_front	561667	female	C542	Parcelrack	561550	male
C355	RJB	563582	male	C542	Parcelrack	561667	female
C355	RJB	565887	female	C543		561607	male
C356	Parcelrack	561710	male	C543		561606	female
C356	Parcelrack	561709	female	C544_plug		562477	male
C357	Parcelrack	561847	male	C544_socket		562479	female
C357	Parcelrack	561862	female	C545		561550	male
C380A	Dash	564222	male	C545		561667	female
C380A	Dash	564224	female	C558	Parcelrack	562503	male
C381	Parcel_Rack	561847	male	C558	Parcelrack	562507	female

CONNECTORS LIST

No	Location	Part #	Gender	No	Location	Part #	Gender
C564	Parcelrack	562503	male	C606		561605	female
C564	Parcelrack	562507	female	C612_plug		561687	male
C564_Sp	Parcelrack	562503	male	C612_socket		561685	female
C564_Sp	Parcelrack	562507	female	C614	Passenger_Area	563071	male
C566	Parcelrack	562503	male	C614	Passenger_Area	563040	female
C566	Parcelrack	562507	female	C615	Passenger_Area	563071	male
C567	Parcelrack	562503	male	C615	Passenger_Area	563040	female
C567	Parcelrack	562507	female	C617	Mirror_LH	563801	male
C574	Parcel_Rack_RH	562549	male	C617	Mirror_LH	563800	female
C574	Parcel_Rack_RH	562550	female	C618	Mirror_RH	563801	male
C575	Parcel_Rack_RH	562503	male	C618	Mirror_RH	563800	female
C575	Parcel_Rack_RH	562507	female	C619_plug		562485	male
C576B	Parcel_Rack_RH	562006	male	C619_socket		562486	female
C576B	Parcel_Rack_RH	560908	female	C621	Aisle_section	560898	male
C576BB	Parcelrack	562006	male	C621	Aisle_section	560900	female
C576BB	Parcelrack	560908	female	C624_plug	Rear_Galley	561690	male
C577A	Parcel_Rack	562006	male	C624_socket	Rear_Galley	561566	female
C577A	Parcel_Rack	560908	female	C626	FJB	562485	male
C577AA	Parcelrack	562006	male	C626	FJB	562486	female
C577AA	Parcelrack	560908	female	C629	DashBoard	561690	male
C578	Parcel_Rack_LH	562503	male	C629	DashBoard	561566	female
C578	Parcel_Rack_LH	562507	female	C630	Parcel_Rack	561690	male
C579	Parcel_Rack_LH	562549	male	C630	Parcel_Rack	561566	female
C579	Parcel_Rack_LH	562550	female	C633	Aisle_section	560898	male
C582	FJB	561690	female	C633	Aisle_section	560900	female
C582	FJB	561566	female	C633A		560898	male
C600	Dash	563226	male	C633A		560900	female
C600	Dash	563613	female	C633B		560898	male
C600A	Dash	563226	male	C633B		560900	female
C600A	Dash	563613	female	C634	Aisle_section	560898	male
C600B	Dash	563226	male	C634	Aisle_section	560900	female
C600B	Dash	563613	female	C634A		560898	male
C601	LHRoofWinAjar	561476	male	C634A		560900	female
C601	LHRoofWinAjar	561477	female	C636	Aisle_section	560898	male
C602	RH_Roof_Win_Ajar	561476	male	C636	Aisle_section	560900	female
C602	RH_Roof_Win_Ajar	561477	female	C645	Aisle_section	560898	male
C602A		561668	male	C645	Aisle_section	560900	female
C602A		561551	female	C660	Rear_Galley	562646	male
C603	RHRoofWinAjar	561476	male	C660	Rear_Galley	562647	female
C603	RHRoofWinAjar	561477	female	C662	FJB	562477	male
C603.		561669	male	C662	FJB	562479	female
C603.		561670	female	C662._plug		562477	male
C606		561577	male	C662._socket		562479	female

CONNECTORS LIST

No	Location	Part #	Gender	No	Location	Part #	Gender
C700	FJB	561637	male	C_AUX_2	Parcelrack	563071	male
C700	FJB	561636	female	C_AUX_2	Parcelrack	563040	female
C700:2	FJB		outofrange.	C_INV1	Parcelrack	562337	male
C700:3			outofrange.	C_INV1	Parcelrack	562338	male
C700:4			outofrange.	C_INV2	Parcelrack	562337	male
C700:7			outofrange.	C_INV2	Parcelrack	562338	male
C710	Front_LH_ParcelRack	561637	male	C_LineOut	Parcelrack	563962	male
C710	Front_LH_ParcelRack	561636	female	C_LineOut	Parcelrack	564489	female
C752_plug	Parcel_Rack	901062	male	C_Mo9	Evap_Cmpt	561577	male
C752_socket	Parcel_Rack	901283	female	C_Mo9	Evap_Cmpt	561605	female
C753_plug	Parcel_Rack	901062	male	C_Mo9:2	Evap_Cmpt	561577	male
C753_socket	Parcel_Rack	901283	female	C_Mo9:2	Evap_Cmpt	561605	female
C766	Parcelrack	561662	male	C_Se51	dash	563589	male
C766	Parcelrack	561661	female	C_Se51	dash	563590	female
C768	Parcel_Rack	901062	male	C_USB	Parcel_Rack	562069	male
C768	Parcel_Rack	901283	female	C_USB	Parcel_Rack	562070	female
C769	Parcel_Rack	901062	male	CCAN1	FJB	562650	male
C769	Parcel_Rack	901283	female	CCAN1	FJB	562649	female
C777	Dash	562477	male	CCAN2	FJB	562650	male
C777	Dash	562479	female	CCAN2	FJB	562649	female
C_A60DB	Parcel_Rack	563071	male	CCAN3	FJB	562650	male
C_A60DB	Parcel_Rack	563040	female	CCAN3	FJB	562649	female
C_A69R	Parcel_Rack	563025	male	CCAN4	FJB	562650	male
C_A97	Dash	563226	male	CCAN4	FJB	562649	female
C_A97	Dash	563613	female	CCust	RJB	562477	male
C_ALT	Enginecmpt.	562581	male	CCust	RJB	562479	female
C_ALT	Enginecmpt.	562583	female	CCust.	RJB	562477	male
C_ALT3	Enginecmpt.	562477	male	CCust.	RJB	562479	female
C_ALT3	Enginecmpt.	562479	female	CFHPR1	Parcelrack	564560	male
C_AUDIO_AUX	Parcel_Rack	562557	male	CIND-1.A	Parcelrack	560908	female
C_AUDIO_AUX	Parcel_Rack	562558	female	CIND-1.B	Parcelrack	560908	female
C_AUDIO_AUX.		562557	male	CIND-2.A	Parcelrack	560908	female
C_AUDIO_AUX.		562558	female	CIND-2.B	Parcelrack	560908	female
C_AUDIO_AUX_LH		562557	male	CIND-11.A	Parcelrack	560908	female
C_AUDIO_AUX_LH		562558	female	CIND-11.B	Parcelrack	560908	female
C_AUDIO_AUX_RH		562557	male	CINDWC-1.A	Parcelrack	560908	female
C_AUDIO_AUX_RH		562558	female	CINDWC-1.B	Parcelrack	560908	female
C_Audio_HDMI_L	Parcel_Rack	901062	male	CL1	FJB	562485	male
C_Audio_HDMI_L	Parcel_Rack	901283	female	CL1	FJB	562486	female
C_Audio_HDMI_R	Parcel_Rack	901062	male	CL58A	Aisle_Section	560898	male
C_Audio_HDMI_R	Parcel_Rack	901283	female	CL58A	Aisle_Section	560900	female
C_AUX	Parcelrack	563071	male	CL58B		560898	male
C_AUX	Parcelrack	563040	female	CL58B		560900	female

CONNECTORS LIST

No	Location	Part #	Gender	No	Location	Part #	Gender
CMo61		561247	male	L22	Upper_front	562486	female
CMo61		561248	female	L23	Upper_front	562486	female
CP1	Passenger_Area	561782	male	L24	Upper_front	562486	female
CP1	Passenger_Area	561781	female	L25	Upper_front	562486	female
CP2	Passenger_Area	561782	male	L26	Upper_front	562486	female
CP2	Passenger_Area	561781	female	L27	Upper_front	562486	female
CP3	Passengersarea	561782	male	L28	Parcelrack	560898	male
CP3	Passengersarea	561781	female	L29	Parcelrack	560898	male
CP4	Passenger_Area	561782	male	L30	Parcelrack	560898	male
CP4	Passenger_Area	561781	female	L30A.A	Parcelrack	560898	male
CP5	Passenger_Area	561782	male	L30B.A	Parcelrack	560898	male
CP5	Passenger_Area	561781	female	L31	Parcelrack	560898	male
CP7		562337	male	L32	Parcelrack	560898	male
CP7		562338	female	L33	Parcelrack	560898	male
CPA17B	RJB	562337	male	L34	Parcelrack	560898	male
CPA17B	RJB	562338	female	L35	Parcelrack	560898	male
CPmod		561782	male	L36	Parcelrack	560898	male
CPmod		561781	female	L37	Parcelrack	560898	male
CSo53	Rear_axle_cmpt.	561690	male	L38	Parcelrack	560898	male
CSo53	Rear_axle_cmpt.	561566	female	L39	Parcelrack	560898	male
CSo58		561690	male	L40	Parcelrack	560898	male
CSo58		561566	female	L41	Parcelrack	560898	male
CSw102	Rear_vehicule	562549	male	L42	Parcelrack	560898	male
CSw102	Rear_vehicule	562550	female	L43	Parcelrack	560898	male
CSX1	Engine_Cmpt	563135	male	L44	Parcelrack	560898	male
CSX1	Engine_Cmpt	563134	female	L45	Parcelrack	560898	male
CSX3	Engine_Cmpt	563135	male	L46	Parcelrack	560898	male
CSX3	Engine_Cmpt	563134	female	L47	Parcelrack	560898	male
CT_IN	Rear_Vehicle	560167	male	L48	Parcelrack	560898	male
CT_IN	Rear_Vehicle	560159	female	L49	Parcelrack	560898	male
CT_IN2	Engine_Cmpt	560167	male	L50	Parcelrack	560898	male
CT_IN2	Engine_Cmpt	560159	female	L51	Parcelrack	560898	male
CT_Out	Rear_Vehicle	560233	female	L52	Parcelrack	560898	male
EI	Enginecmpt.	563739	male	L52	Parcelrack	560900	female
L1A	Engine_Cmpt	560774	male	L52A	Parcelrack	560898	male
L16.A	Frontroof	562615	female	L53	Parcelrack	560898	male
L16.B	Frontroof	562615	female	L53	Parcelrack	560900	female
L17.A	Frontroof	562615	female	L53A	Parcelrack	560898	male
L17.B	Frontroof	562615	female	L54	Parcelrack	560898	male
L18	Entrance_Door	562549	male	L54	Parcelrack	560900	female
L19	Entracedoor	562486	female	L54A	Parcelrack	560898	male
L20	Entracedoorstep	562486	female	L55	Parcelrack	560898	male
L21	Upper_front	562486	female	L55	Parcelrack	560900	female

CONNECTORS LIST

No	Location	Part #	Gender	No	Location	Part #	Gender
L55A	Parcelrack	560898	male	L97.B		563069	female
L56	Parcelrack	560898	male	L98.A		563069	female
L56	Parcelrack	560900	female	L98.B	Outside_Front_RH	563069	female
L56A	Parcelrack	560898	male	L140	Lavatory	561247	male
L57	Parcelrack	560898	male	L141	Upper_front	561247	male
L57	Parcelrack	560900	female	L142	Lavatory	562006	male
L57A	Parcelrack	560898	male	L143	Parcel_rack	561186	male
L58	Parcelrack	560898	male	L144	Parcelrack	561186	male
L58	Parcelrack	560900	female	L145	Parcelrack	561186	male
L58A	Parcelrack	560898	male	L146	Parcelrack	561186	male
L63	Front_Side_LH	562155	male	L147	Parcelrack	561186	male
L64	Outside_Front_RH	562155	male	L148	Parcelrack	561186	male
L64X	Aisle_Section	560898	male	L149	Parcelrack	561186	male
L65	Outside_Front_LH	562155	male	L150	Parcelrack	561186	male
L66	Out_Side_Front_LH	562155	male	L151	Parcelrack	561186	male
L67	4th_Lugg_Cmpt	562155	male	L152	Parcelrack	561186	male
L68	4th_Lugg_Cmpt	562155	male	L153	Parcelrack	561186	male
L69	4th_Lugg_Cmpt	562155	male	L154	Parcelrack	561186	male
L70	4th_Lugg_Cmpt	562155	male	L155	Parcelrack	561186	male
L72	Rear_Vehicle	562155	male	L156	Parcelrack	561186	male
L74	Rear_Vehicle	562155	male	L157	Parcelrack	561186	male
L75	Rearenginedoor	562155	male	L158	Parcelrack	561186	male
L76	Rear_engine_door	562155	male	L173	Parcelrack	563590	female
L81.A	Rear_Vehicle	562835	female	L174A	Parcelrack	563590	female
L81.B	Rear_Vehicle	562834	male	L175	Engine_Cmpt.	563590	female
L82A	Rearvehicule	562348	female	L176	5th_Lugg_Cmpt	561247	male
L83A	Rearvehicule	562348	female	L177	5th_Lugg_Cmpt	561247	male
L84	Rear_roof	562486	female	L178	3rd_Lugg_Cmpt	561247	male
L85	Rear_roof	562486	female	L179	3rd_Lugg_Cmpt	561247	male
L86	Rear_roof	562486	female	L180	2nd_Lugg_Cmpt	561247	male
L87	Rear_roof	562486	female	L181	2nd_Lugg_Cmpt	561247	male
L88	Rear_roof	562486	female	L182	1st_Lugg_Cmpt	561247	male
L89	Rear_roof	562486	female	L183	1st_Lugg_Cmpt	561247	male
L90	Rear_roof	562486	female	L184	Servicecmpt.	561247	male
L93.A		563069	female	L185.A	Servicecmpt.	561539	male
L93.B	Engine_Cmpt.	563069	female	L185.B	Servicecmpt.	561539	male
L94.A		563069	female	L186.A	Dash	561539	male
L94.B	Engine_Cmpt.	563069	female	L186.B	Dash	561539	male
L95	Outside_Front_LH	562485	male	L187	Engine_Cmpt	561690	male
L95A	Outside_Front_LH	562485	male	L188	Service_Cmpt	562486	female
L96	Outside_Front_RH	562485	male	L193.A	Dash	560488	female
L96A	Outside_Front_RH	562485	male	L193.B	Dash	560488	female
L97.A		563069	female	L194.A	Dash	562019	female

CONNECTORS LIST

No	Location	Part #	Gender	No	Location	Part #	Gender
L194.B	Dash	560488	female	L314	Front_vehicle	562789	male
L195.A	Dash	560488	female	L315	Front_vehicle	562789	male
L195.B	Dash	560488	female	L319	Under_WCL_platform	561247	male
L199	Enginecmpt.	562848	male	L320		561247	male
L201	Upper_front	561247	male	L350A.A	Rearaxlecmpt.	564552	male
L202	Upper_front	561247	male	L350A.B	Rearaxlecmpt.	563340	male
L203	RH_Console	561690	male	L350A.C	Rearaxlecmpt.	562251	male
L204	Parcel_Rack_RH	562803	male	L600	Luggage_Cmpt	562155	male
L205	Enginecmpt.	562485	male	L601	Luggage_Cmpt	562155	male
L206	Parcel_Rack_RH	562803	male	L602	Luggage_Cmpt	562155	male
L211	Entrace_Door_step	562486	female	L603	Luggage_Cmpt	562155	male
L212	outside_rear_LH_RH	563589	male	L604	Luggage_Cmpt	562155	male
L213	outside_rear_LH_RH	563589	male	L605	Luggage_Cmpt	562155	male
L214	outside_rear_LH_RH	563589	male	L606	Luggage_Cmpt	562155	male
L243	Parcelrack	561186	male	L607	Luggage_Cmpt	562155	male
L244	Parcelrack	561186	male	L634	Aisle_Section	560898	male
L245	Parcelrack	561186	male	L635	Aisle_Section	560898	male
L246	Parcelrack	561186	male	L650.A	Aisle_Section	560898	male
L247	Parcel_rack	561186	male	L660_1	Rear_Galley	560898	male
L248	Parcelrack	561186	male	L660_2	Rear_Galley	560898	male
L249	Parcelrack	561186	male	L660_3	Rear_Galley	560898	male
L250	Parcel_rack	561186	male	L661.A	Rear_Galley	560081	female
L251	Parcel_rack	561186	male	L661.B	Rear_Galley	560081	female
L252	Parcelrack	561186	male	Mic_Driver_1.A	Parcel_rack	560999	male
L253	Parcel_rack	561186	male	Mic_Driver_2.A	Parcel_rack	560999	male
L254	Parcelrack	561186	male	Mic_Driver_3.A	Parcel_rack	560999	male
L255	Parcel_rack	561186	male	Mic_Guide_1.A	Parcel_rack	560999	male
L256	Parcelrack	561186	male	Mic_Guide_2.A	Parcel_rack	560999	male
L257	Parcelrack	561186	male	Mic_Guide_3.A	Parcel_rack	560999	male
L258	Parcel_rack	561186	male	Mo.10		561515	male
L282	Engine_Cmpt	561690	male	Mo.10		561552	female
L285.A	Rear_Vehicle	562835	female	Mo.11		561515	male
L285.B	Rear_Vehicle	562834	male	Mo.11		561552	female
L286.A	Rear_Vehicle	562835	female	Mo3	Dash	561667	female
L286.B	Rear_Vehicle	562834	male	Mo4		564161	male
L290	Engine_door	562565	female	Mo5	Upper_front	561550	male
L291	Engine_door	562565	female	Mo6	Front_vehicle	561690	male
L298A	Enginecmpt.	563590	female	Mo7		563691	male
L306	RJBcmpt.	561247	male	Mo7.		561890	male
L309.	Rear_LH_Lugg	564576	male	Mo8		563691	male
L309D.	Drivers_Area	564576	male	Mo8.		561890	male
L310.	Rear_LH_Lugg	564576	male	Mo10	Parcel_rack	561515	male
L310D.	Drivers_Area	564576	male	Mo11	Parcel_rack	561515	male

CONNECTORS LIST

No	Location	Part #	Gender	No	Location	Part #	Gender
Mo12	Engine_Cmpt	561690	male	PR1A	Passenger_Area	561781	female
Mo13	Engine_Cmpt	561690	female	R1		562486	female
Mo14	Engine_Cmpt	561566	female	R3	RJB	563409	male
Mo15	Front_Ceiling	560900	female	R4	FJB	564496	male
Mo16	Front_Ceiling	560900	female	R5	RJB	564496	male
Mo17	RH_Console	563626	male	R12	Evap_Cmpt	563409	male
Mo18		562474	male	R16	RJB	564496	male
Mo19	Fr_Service_Door	562474	male	R20	RJB	564496	male
Mo20	Fr_Service_Door	562474	male	R21	FJB	560525	male
Mo21	Upper_front	561186	male	R23A	FJB	564496	male
Mo22	RH_Console	561186	male	R26	Evap_Cmpt	564496	male
Mo24	RH_Console	562348	female	R27	Dash	564496	male
Mo25	RH_Console	562348	female	R28	FJB	564496	male
Mo27		563691	male	R29	RJB	563409	male
Mo27.		561890	male	R30	FJB	564496	male
Mo28		563691	male	R31	FJB	564496	male
Mo28.		561890	male	R34	RJB	564210	male
Mo54	Service_Cmpt	562474	male	R36	Dash	564496	male
Mo61	Parcel_rack	561248	female	R37	Dash	564496	male
Mo62	FrontHatch	562486	female	R38	FJB	564496	male
Mo63	RearHatch	562486	female	R40	RJB	564496	male
Mo65	Enginecmpt.	568089	male	R47	Parcelrack	564496	male
Mo67	Enginecmpt.	568089	male	R72	5th_Bay	563409	male
Mo68	Enginecmpt.	568089	male	R73	5th_Bay	563409	male
Mo69	Enginecmpt.	568089	male	R210		560525	male
Mo70	Enginecmpt.	568089	male	R622		561183	male
Mo71	Enginecmpt.	568089	male	R623		561183	male
Mo72	Enginecmpt.	568089	male	R624		561183	male
Mo73	Enginecmpt.	568089	male	R_12VISS	Parcel_rack	564496	male
PC1	FJB	562650	male	Res3.A	ParcelRack	563590	female
PC1	FJB	562649	female	Res4	RH_Console	563590	female
PF	FJB	561782	male	Res6	FJB	563590	female
PF	FJB	561781	female	Res6A	FJB	563589	male
PF1	Passenger_Area	561782	male	Res6A	FJB	563590	female
PF1	Passenger_Area	561781	female	Res6B	FJB	563589	male
PF1A	Passenger_Area	561782	male	Res6B	FJB	563590	female
PF1A	Passenger_Area	561781	female	Res7	dash	563590	female
Pot2	Dash	561550	male	Res15	Engine_Cmpt	561782	male
PR	Parcelrack	561782	male	Res31	Ureacmpt.	562350	male
PR	Parcelrack	561781	female	Res32	Ureacmpt.	563764	female
PR1	Passenger_Area	561782	male	Res46	Rear_axle_cmpt	563590	female
PR1	Passenger_Area	561781	female	Res53	dash	563590	female
PR1A	Passenger_Area	561782	male	Res99	dash	563590	female

CONNECTORS LIST

No	Location	Part #	Gender	No	Location	Part #	Gender
Se2	Service_Cmpt	561566	female	Se54	Service_Cmpt	563159	female
Se4	Window_RH	561477	female	Se55	Service_Cmpt	563159	female
Se5	Window_RH	561477	female	Se56	WCLdoor	562479	female
Se6	Window_RH	561477	female	Se60	Service_Cmpt	563409	male
Se7	Window_LH	561477	female	Se63	Rearaxlecmpt.	641132	female
Se8	Window_LH	561477	female	Se64	Rearaxlecmpt.	641132	female
Se9	Window_LH	561477	female	Se65	Dash	564042	female
Se10	FJB	561477	female	Se66	FJB	564039	female
Se11.A	Cond_Cmpt	560082	female	Se67	Frontaxlecmpt.	563159	female
Se11.B	Cond_Cmpt	560082	female	Se69	Frontaxlecmpt.	563159	female
Se11.C	Cond_Cmpt	560082	female	Se74	Rear_Axle_Cmpt	563340	male
Se13	Engine_Cmpt	562350	male	Se79	Front_Axle	563340	male
Se14.A	Driver_Area	561782	male	Se89	EngineCmpt	562350	male
Se14.B	Driver_Area	561781	female	Se94	WCLdoor	562877	female
Se15	RH_Console	560898	male	Se100	WCLdoor	562479	female
Se17	Entrace_Door	560081	female	shell1_633		561626	female
Se18	Servicecmpt.	561566	female	shell1_1618	Driver_Area	562471	male
Se19_P	Service_Cmpt	563677	male	So3	RH_Console	641385	male
Se19_S	Service_Cmpt	563677	male	So4	RH_Console	641385	male
Se20	Evap_Cmpt	562426	male	So5	RH_Console	641385	male
Se21	Dash	561248	female	So6	RH_Console	641385	male
Se23	Engine_Cmpt	563159	male	So7	Service_Cmpt	561566	female
Se24	Evap_Cmpt	563758	female	So8	Servicecmpt.	641385	male
Se25	Passenger_Area	561248	female	So9	Enginecmpt.	560016	female
Se28	Pneumatic_plate	561690	male	So10	Cond_Cmpt	562485	male
Se29	Engine_Cmpt	561566	female	So11	Cond_Cmpt	561566	female
Se30	Enginedoor	562877	female	So13	Evap_Cmpt	563204	female
Se31	Enginedoor	562877	female	So14	Servicecmpt.	641385	male
Se32	Rear_Axle_Cmpt	562426	male	So15	Servicecmpt.	641385	male
Se33	Rear_Axle_Cmpt	562856	male	So16	Servicecmpt.	641385	male
Se34	Rear_Axle_Cmpt	562426	male	So17	Servicecmpt.	562848	male
Se35	Rear_Axle_Cmpt	562426	male	So18	Pneumatic_plate	641385	male
Se36	Rear_Axle_Cmpt	562427	male	SO18_RH		641385	male
Se37	Front_Axle_LH	641132	female	So19	Pneumatic_plate	641385	male
Se38	Front_Axle_RH	641132	female	SO19_RH		641385	male
Se39	Rear_Axle_LH	641132	female	So20	Servicecmpt.	641385	male
Se40	Rear_Axle_LH	641132	female	So21	Front_Axle_Cmpt	564046	female
Se41	Condensor_cmpt.	562877	female	So22	Front_Axle_Cmpt	564046	female
Se45	Servicecmpt.	563409	male	So23	Rear_Axle_Cmpt	564046	female
Se46	Rearaxlecmpt.	562348	female	So24	Rear_Axle_Cmpt	564046	female
Se49	Engine_Cmpt	561690	male	So27	Rearaxlecmpt.	564045	female
Se51	Driverseat	563589	male	So50	Rearaxlecmpt.	564046	female
Se53	Service_Cmpt	563159	female	So52	Rearaxlecmpt.	564045	female

CONNECTORS LIST

No	Location	Part #	Gender	No	Location	Part #	Gender
So54	Enginecmpt.	564045	female	Spk12_L	Parcel_Rack_LH	563994	male
So60		562848	male	Spk12_R	Parcel_Rack_RH	563994	male
So70		561566	female	Spk13_L	Parcel_Rack_LH	563994	male
spBar4	Enginecmpt.	564135	male	Spk13_R	Parcel_Rack_RH	563994	male
spBar5	Enginecmpt.	564135	male	Spk14_L	Parcel_Rack_LH	563994	male
spBar6	Enginecmpt.	564135	male	Spk14_R	Parcel_Rack_RH	563994	male
spBar7	Enginecmpt.	564135	male	Spk15_L	Parcel_Rack_LH	563994	male
spBar11	Engine_Cmpt.	564135	male	Spk15_R	Parcel_Rack_RH	563994	male
spBar12	Engine_Cmpt.	564135	male	Spk16_L	Parcel_Rack_LH	563994	male
spBar13	Enginecmpt.	564135	male	Spk16_R	Parcel_Rack_RH	563994	male
spBar14	Enginecmpt.	564135	male	Spk16_R_Lav		563994	male
spBar15	Enginecmpt.	564135	male	SpkDr_L	Parcel_Rack_LH	563994	male
spBar16	Enginecmpt.	564135	male	SpkDr_R	Parcel_Rack_RH	563994	male
spBar19	Condensorcmpt.	564135	male	Sub1.A	Passenger_Area	564004	female
spBar20	Condensorcmpt.	564135	male	Sub2.A	Passenger_Area	564004	female
spBar21	Condensorcmpt.	564135	male	Sw1.C258	Driver_Area	561188	female
spBar22	Enginecmpt.	564135	male	Sw1.C259	Driver_Area	561186	male
spBar23	Enginecmpt.	564135	male	Sw2	Dash	562763	male
spBar24	Enginecmpt.	564135	male	Sw3	Dash	562763	male
spBar26	Rear_axle_cmpt	564135	male	Sw4	Dash	562763	male
spBar27	Rear_axle_cmpt	564135	male	Sw5	Dash	562763	male
Spk1_L	Parcel_Rack_LH	563994	male	Sw6	Dash	562763	male
Spk1_R	Parcel_Rack_RH	563994	male	Sw10A	LH_Console	562763	male
Spk2_L	Parcel_Rack_LH	563994	male	Sw12		562763	male
Spk2_R	Parcel_Rack_RH	563994	male	Sw14	Dash	562763	male
Spk3_L	Parcel_Rack_LH	563994	male	Sw16	Dash	562763	male
Spk3_R	Parcel_Rack_RH	563994	male	Sw17	Dash	562763	male
Spk4_L	Parcel_Rack_LH	563994	male	SW18_RH		562763	male
Spk4_R	Parcel_Rack_RH	563994	male	Sw18A	LH_Console	562763	male
Spk5_L	Parcel_Rack_LH	563994	male	Sw20	Dash	562763	male
Spk5_R	Parcel_Rack_RH	563994	male	Sw21	Dash	562763	male
Spk6_L	Parcel_Rack_LH	563994	male	Sw24	Dash	562763	male
Spk6_R	Parcel_Rack_RH	563994	male	Sw25	Dash	562763	male
Spk7_L	Parcel_Rack_LH	563994	male	Sw26	Dash	562763	male
Spk7_R	Parcel_Rack_RH	563994	male	Sw27	Dash	562763	male
Spk8_L	Parcel_Rack_LH	563994	male	Sw29	Dash	562763	male
Spk8_R	Parcel_Rack_RH	563994	male	Sw30	RJB	563135	male
Spk9_L	Parcel_Rack_LH	563994	male	Sw32	Dash	561477	female
Spk9_R	Parcel_Rack_RH	563994	male	Sw33	Dash	561476	male
Spk10_L	Parcel_Rack_LH	563994	male	Sw34	Outside_Front_RH	562477	male
Spk10_R	Parcel_Rack_RH	563994	male	Sw35	Console	562763	male
Spk11_L	Parcel_Rack_LH	563994	male	Sw38	LH_Console	562763	male
Spk11_R	Parcel_Rack_RH	563994	male	Sw39.A	RJB	562403	female

CONNECTORS LIST

No	Location	Part #	Gender	No	Location	Part #	Gender
Sw39.B	RJB	562403	female	Sw96.B	WCL_Door	562615	female
Sw40	LH_Console	561690	male	Sw96.C	WCLdoor	562615	female
Sw41	LH_Console	562749	male	Sw97.A	WCLsystem	562615	female
Sw42	Lugg_Cmpt	561636	female	Sw97.B	WCLsystem	562615	female
Sw43	LH_Console	561690	male	Sw97.C	WCLsystem	562615	female
Sw44.A	FJB	562403	female	Sw98.A	WCLsystem	562615	female
Sw44.B	FJB	562403	female	Sw98.B	WCLsystem	562615	female
Sw45.A	5th_Lugg_Cmpt	562485	male	Sw98.C	WCLsystem	562615	female
Sw45.B	5th_Lugg_Cmpt	562486	female	Sw100	dash	562763	male
Sw46.A	5th_Lugg_Cmpt	562485	male	Sw107	dash	562763	male
Sw46.B	5th_Lugg_Cmpt	562486	female	Sw108	dash	562763	male
Sw47.A	3rd_Lugg_Cmpt	562485	male	Sw122		562763	male
Sw47.B	3rd_Lugg_Cmpt	562486	female	Sw124		562763	male
Sw48.A	3rd_Lugg_Cmpt	562485	male	Sw125.A		561457	female
Sw48.B	3rd_Lugg_Cmpt	562486	female	Sw125.B		561457	female
Sw49.A	2nd_Lugg_Cmpt	562485	male	Sw126		562763	male
Sw49.B	2nd_Lugg_Cmpt	562486	female	Sw137	Dash	562763	male
Sw50.A	2nd_Lugg_Cmpt	562485	male	Sw149	Dash	562763	male
Sw50.B	2nd_Lugg_Cmpt	562486	female	Sw156	LH_Console	562763	male
Sw51.A	1st_Lugg_Cmpt	562485	male	Sw157	Dash	562763	male
Sw51.B	1st_Lugg_Cmpt	562486	female	Sw158	Dash	562763	male
Sw52.A	1st_Lugg_Cmpt	562485	male	Sw161		562763	male
Sw52.B	1st_Lugg_Cmpt	562486	female	Sw162		562763	male
Sw55.A	Lavatory	560488	female	Sw221		562763	male
Sw55.B	Lavatory	560488	female	Sw619		562763	male
Sw56.A	Lavatory	560488	female	Sw629	Dash	562763	male
Sw56.B	Lavatory	560488	female	Sw660	Rear_Galley	562763	male
Sw58	Engine_Cmpt.	563135	male	Sw661	Rear_Galley	562763	male
Sw59	Enginecmpt.	563135	male	Sw663	Rear_Galley	562763	male
Sw63A	LHConsole	562763	male	Sw670	dash	562763	male
Sw64.A	Service_Cmpt	560815	female	sym698_166.A	Parcel_rack	564489	female
Sw64.B	Service_Cmpt	560815	female	sym698_166.B	Parcel_rack	562706	female
Sw70		562763	male	sym698_166.C	Parcel_rack	562706	female
Sw82	RJB	563135	male	sym699_166.A	Parcel_rack	564489	female
Sw83.A	Dash	560082	female	sym699_166.B	Parcel_rack	562706	female
Sw83.B	Dash	560815	female	sym699_166.C	Parcel_rack	562706	female
Sw83.C	Dash	560082	female	sym700_166.A	Parcel_rack	564489	female
Sw83.D	Dash	560815	female	sym700_166.B	Parcel_rack	562706	female
Sw85	LH_Console	562749	male	sym700_166.C	Parcel_rack	562706	female
Sw95.A	WCLdoor	562615	female	sym770_34.A		561566	female
Sw95.B	WCLdoor	562615	female	sym808_476.A		561566	female
Sw95.C	WCLdoor	562615	female	sym809_476.A		561566	female
Sw96.A	WCL_Door	562615	female	sym812_291.A	Parcelrack	565180	female

CONNECTORS LIST

No	Location	Part #	Gender				
sym948_1199.A		564221	male				
sym948_1199.B		564518	male				
sym953_1199.P1		562350	male				
sym953_1199.P2		563322	female				
sym953_1199.P4		568088	male				
sym1055_1288		562011	male				
tab69	Parcelrack	561626	N/A				
Tab70a	Parcelrack	561626	N/A				
Tab70b	Parcelrack	561626	N/A				
tab71a	Parcelrack	561626	N/A				
Tab600		561904	N/A				
Tab601		561108	N/A				
Tab602		561108	N/A				
Tab603		561108	N/A				
Tab604		561108	N/A				
TermA43J1_21		564629	N/A				
TermA43J2_13		564629	N/A				
TermA52J1_6		564629	N/A				
TermA52J1_16		564629	N/A				
TermL150	Parcel_rack	562505	N/A				
TermL248	Parcel_rack	562505	N/A				
Tstat_26.A		560079	N/A				
VECF1	FJB	563186	male				
VECF2	FJB	563183	male				
VECF3	FJB	563185	male				
VECF4	FJB	563182	male				
VECF9	FJB	563448	male				
VECF10	FJB	563181	male				
VECF11	FJB	563184	male				
VECF12	FJB	563187	male				
VECR1	RJB	563186	male				
VECR2	RJB	563183	male				
VECR3	RJB	563185	male				
VECR4	RJB	563182	male				
VECR4.	RJB	563182	male				
VECR9	RJB	563448	male				
VECR10	RJB	563181	male				
VECR11	RJB	563184	male				
VECR12	RJB	563187	male				
VECT3	Rear_vehicule	563718	male				
VECT4	Rear_vehicule	563714	male				
Y80	Engine_Cmpt	563789	male				
Y81	Cond_Cmpt	563793	male				

CONNECTORS LIST

No	Location	Part #	Gender	No	Location	Part #	Gender
24SS_OP	Parcel_Rack_LH	563071	male	A36.JB	FJB	562765	male
24SS_OP	Parcel_Rack_LH	563040	female	A36.JC	FJB	562957	male
24SS_OP_2	Parcel_Rack_LH	563071	male	A39.P101	Parcel_Rack_LH	563201	male
24SS_OP_2	Parcel_Rack_LH	563040	female	A39.P901	Parcel_Rack_LH	563953	male
120V_inlet	Rearvehicule	561572	male	A41.J1	FJB	563679	male
A1	RJB	563975	male	A41.J2	FJB	564037	male
A2	FJB	563984	male	A41.J3	FJB	564004	male
A3	Dash	562363	male	A60.A	Parcel_Rack_LH	563071	male
A4.A	Service_Cmpt	562428	female	A60.B	Parcel_Rack_LH	562706	female
A4.B	Service_Cmpt	561188	female	A60.C	Parcel_Rack_LH	901110	male
A5	Service_Cmpt	562428	female	A60.D	Parcel_Rack_LH	901110	male
A6	Engine_Cmpt	562427	male	A61.A	Parcel_Rack_LH	562464	male
A7	Rear_Axle_Cmpt	563979	male	A61.B	Parcel_Rack_LH	562465	male
A9.Cx1	FJB	564041	female	A65.A	Parcel_Rack_LH	563025	male
A9.Cx2	FJB	563678	male	A65.B4	Parcel_Rack_LH	bidon	male
A9.Cx3	FJB	564037	female	A65.B5	Parcel_Rack_LH	bidon	male
A9.Cx4	FJB	564038	female	A65.B6	Parcel_Rack_LH	bidon	male
A10.X1	Engine_Cmpt	563135	male	A65.D	Parcel_Rack_LH	bidon	male
A10.X3	Engine_Cmpt	563134	female	A65.E	Parcelrack	563071	male
A11	LH_Console	563142	male	A65.G1	Parcel_Rack_LH	563071	male
A14.A	Dash	562766	male	A65.G2	Parcel_Rack_LH	563071	male
A14.B	Dash	562767	male	A65.G3	Parcel_Rack_LH	563071	male
A14.C	Dash	562765	male	A65.H1	Parcel_Rack_LH	561716	female
A15	Dash	562464	male	A65.H2	Parcel_Rack_LH	561716	female
A17.D	RJB	561932	male	A65.H3	Parcel_Rack_LH	561716	female
A18.J1	FJB	562794	male	A65.J	Parcel_Rack_LH	562465	male
A18.J2	FJB	562650	male	A69L.A	Parcel_Rack_LH	563025	male
A19	LH_Console	562878	female	A69L.B1	Parcel_Rack_LH	bidon	male
A20	Parcel_Rack_LH	561477	female	A69L.B2	Parcel_Rack_LH	bidon	male
A25	Parcel_Rack_LH	563025	male	A69L.B3	Parcel_Rack_LH	bidon	male
A26.P1	Enginecmpt.	562350	male	A69L.B4	Parcel_Rack_LH	bidon	male
A26.P2	Enginecmpt.	563322	female	A69L.C	Parcel_Rack_LH	bidon	male
A26.P4	Enginecmpt.	568088	male	A69R.A	Parcel_Rack_LH	563025	male
A27	Service_Cmpt	562929	male	A69R.B1	Parcel_Rack_LH	bidon	male
A28	Service_Cmpt	562928	male	A69R.B2	Parcel_Rack_LH	bidon	male
A29.	Dash	562464	male	A69R.B3	Parcel_Rack_LH	bidon	male
A29.	Dash	565871	female	A69R.B4	Parcel_Rack_LH	bidon	male
A33.A	Parcel_Rack_LH	563071	male	A69R.C	Parcel_Rack_LH	bidon	male
A33.B	Parcel_Rack_LH	562330	female	A70a	Parcelrack	561540	female
A34.J	Enginecmpt.	568118	male	A70b	Parcelrack	561540	female
A34.K	Enginecmpt.	564270	male	A77	Parcelrack	564547	male
A34.L	Enginecmpt.	564269	male	A78	Parcelrack	562583	female
A36.JA	FJB	562767	male	A79	Parcelrack	562583	female

CONNECTORS LIST

No	Location	Part #	Gender	No	Location	Part #	Gender
A80	Parcelrack	562479	female	A131.B	Engine_Cmpt	561781	female
A81.JA	FJB	562767	male	A137A	Condensercmpt.	20429843	male
A81.JB	FJB	562765	male	A138	Cond_Cmpt	563787	male
A81.JC	FJB	562957	male	A139	Dash	564501	male
A83.A	Dash	565970	female	A150	Parcelrack	21280133	male
A95.A	Parcelrack	564489	female	A152.A	Parcelrack	561550	male
A95.B	Parcelrack	562706	female	A152.B	Parcelrack	563071	male
A95.C	Parcelrack	562706	female	A152.C	Parcelrack	563071	male
A96.A	FJB	564205	male	A152.D	Parcelrack	563071	male
A97	Dash	563226	male	A152.E	Parcelrack	563071	male
A97A	FJB	563226	male	A152.F	Parcelrack	563071	male
A97A	FJB	563613	female	A152.G	Parcelrack	563071	male
A97B	FJB	563226	male	A152.H	Parcelrack	563071	male
A97B	FJB	563613	female	A152.I	Parcelrack	563071	male
A97S.A1	Dash	564401	male	A152.J	Parcelrack	563071	male
A97S.A2	Dash	564402	male	A152.K	Parcelrack	562779	male
A97S.A3	Dash	564403	male	A152.L	Parcelrack	562779	male
A99	FJB	564205	male	A162.A	FrontCab	561566	female
A100	Front_axle_cmpt	563632	male	A162.B	FrontCab	561782	male
A101	Rear_axle_cmpt	563632	male	A164.A	RH_trapezoidal_window	561566	female
A102	Rear_axle_cmpt	563632	male	A164.B	RH_trapezoidal_window	561782	male
A103	Dash	562070	female	A166	RearCab	561637	male
A107	EngineCmpt.	560336	male	A614.A	Parcelrack	561550	male
A108	RJB	562766	male	A614.C1	Parcelrack	563071	male
A109A	FJB	564141	male	A614.C2	Parcelrack	563071	male
A111	RJB	562550	female	A614.C3	Parcelrack	563071	male
A113.A	Parcel_Rack_LH	563960	male	A614.C4	Parcelrack	563071	male
A113.B	Parcel_Rack_LH	563962	male	A614.C5	Parcelrack	563071	male
A113.C1	Parcel_Rack_LH	563956	male	A614.C6	Parcelrack	563071	male
A113.C2	Parcel_Rack_LH	563957	male	A614.I/O	ParcelRack	bidon	male
A113.C3	Parcel_Rack_LH	563958	male	A614.P1	Parcelrack	562783	male
A114A	Dash	564252	male	A614.P2	Parcelrack	562783	male
A120.A	Dashboard	563960	male	A614.P3	Parcelrack	562783	male
A120.B	Dashboard	563962	male	AE41.J1	FJB	563679	male
A120.C1	Dashboard	563956	male	AE41.J2	FJB	564037	female
A120.C2	Dashboard	563957	male	AE41.J3	FJB	564004	male
A120.C3	Dashboard	563958	male	AE42.J1	FJB	563679	male
A121.Vsa	Dash	563679	male	AE42.J2	FJB	564037	female
A121.Vsb	Dash	563678	male	AE42.J3	FJB	564004	male
A121.Vsc	Dash	564037	male	AE43.J1	FJB	563679	male
A121.Vsd	Dash	564118	male	AE43.J2	FJB	564037	male
A130	Driver_Area	563226	male	AE43.J3	FJB	565957	male
A131.A	Engine_Cmpt	561782	male	AE44.J1	FJB	563679	male

CONNECTORS LIST

No	Location	Part #	Gender	No	Location	Part #	Gender
AE44.J2	FJB	564037	female	AE55.J3	Dash	564004	male
AE44.J3	FJB	565957	male	AE56.J1	Dash	563679	male
AE45.J1	FJB	563679	male	AE56.J2	Dash	564037	male
AE45.J2	FJB	564037	female	AE56.J3	Dash	564004	male
AE45.J3	FJB	565957	male	AE57.J1	WCLcmpt.	563679	male
AE46.J1	FJB	563679	male	AE57.J2	WCLcmpt.	564037	male
AE46.J2	FJB	564037	female	AE57.J3	WCLcmpt.	564004	male
AE46.J3	FJB	565957	male	AltLL.A	Enginecmpt.	563746	female
AE47.J1	RH_console	563679	male	AltLL.B	Enginecmpt.	560815	female
AE47.J2	RH_console	564037	female	AltLL.C	Enginecmpt.	564469	female
AE47.J3	RH_console	565957	male	AltLR.A	enginecmpt.	563746	female
AE48.J1	RH_console	563679	male	AltLR.B	Enginecmpt.	560815	female
AE48.J2	RH_console	564037	female	AltLR.C	Enginecmpt.	564469	female
AE48.J3	RH_console	565957	male	AltUR.A	Enginecmpt.	563746	female
AE49..J1	RJB	563679	male	AltUR.B	Enginecmpt.	560815	female
AE49..J2	RJB	564037	male	AltUR.C	Enginecmpt.	564469	female
AE49..J3	RJB	565957	male	B85	Engine_Cmpt	563815	male
AE49.J1	RJB	563679	male	B96	Engine_Cmpt	563821	male
AE49.J2	RJB	564037	male	B96B	Engine_Cmpt	563823	male
AE49.J3	RJB	565957	male	B97	Engine_Cmpt	563816	male
AE50..J1	RJB	563679	male	B98	Engine_Cmpt	563817	male
AE50..J2	RJB	564037	male	B99	Engine_Cmpt	563815	male
AE50..J3	RJB	565957	male	B115A	Enginecmpt.	564226	male
AE50.J1	RJB	563679	male	B142C	Condensercmpt.	563793	male
AE50.J2	RJB	564037	male	B310	Enginecmpt.	565967	male
AE50.J3	RJB	565957	male	C1	FJB	563589	male
AE51.J1	RJB	563679	male	C1	FJB	563590	female
AE51.J2	RJB	564037	female	C1S	FJB	563589	male
AE51.J3	RJB	565957	male	C1S	FJB	563590	female
AE52..J1	RJB	563679	male	C2	Service_Cmpt	563580	male
AE52..J2	RJB	564037	male	C2	Service_Cmpt	563581	female
AE52..J3	RJB	565957	male	C2A	FJB	563580	male
AE52.J1	RJB	563679	male	C2A	FJB	563581	female
AE52.J2	RJB	564037	female	C2B	FJB	564034	male
AE52.J3	RJB	565957	male	C2B	FJB	564035	female
AE53.J1	LH_ParcelRack	563679	male	C3_plug	RJB	563589	male
AE53.J2	LH_ParcelRack	564037	female	C3_socket	RJB	563590	female
AE53.J3	LH_ParcelRack	565957	male	C3AP	FJB	563589	male
AE54.J1	Evaporatorcmpt.	563679	male	C3AP	FJB	563590	female
AE54.J2	Evaporatorcmpt.	564037	female	C3AS	FJB	563589	male
AE54.J3	Evaporatorcmpt.	565957	male	C3AS	FJB	563590	female
AE55.J1	Dash	563679	male	C3S	RJB	563593	male
AE55.J2	Dash	564037	female	C3S	RJB	563590	female

CONNECTORS LIST

No	Location	Part #	Gender	No	Location	Part #	Gender
C4	FJB	563580	male	C25	Parcel_Rack_LH	561667	female
C4	FJB	563581	female	C26	Ureacmpt.	563226	male
C5	FJB	563589	male	C26	Ureacmpt.	563613	female
C5	FJB	563590	female	C26A	Ureacmpt	568110	male
C5S	FJB	563589	male	C26A	Ureacmpt	568109	female
C5S	FJB	563590	female	C26B	Ureacmpt.	563227	male
C6	FJB	563582	male	C26B	Ureacmpt.	563614	female
C6	FJB	563583	female	C29	4rd_Lugg_Cmpt	563651	male
C7	Service_Cmpt	562581	male	C29	3rd_Lugg_Cmpt	563652	female
C7	Service_Cmpt	562583	female	C30	3rd_Lugg_Cmpt	561710	male
C8	FJB	563227	male	C30	3rd_Lugg_Cmpt	561709	female
C8	FJB	563614	female	C31W	Parcelrack	563227	male
C9	RJB	561986	male	C31W	Parcelrack	563614	female
C9	RJB	561987	female	C32	lavatory	561734	male
C10	Engine_Cmpt	562581	male	C32	Lavatory	561735	female
C10	Engine_Cmpt	562583	female	C32W	WCLcmpt.	561669	male
C11	Service_Cmpt	563580	male	C32W	WCLcmpt.	561670	female
C11	Service_Cmpt	563581	female	C33	WCLcmpt.	564034	male
C12	Engine_Cmpt	562581	male	C33	WCLcmpt.	564035	female
C12	Engine_Cmpt	562583	female	C34	RH_Console	561986	male
C13_plug	RH_Console	563589	male	C34	RH_Console	561987	female
C13_socket	RH_Console	563590	female	C36	FJB	561986	male
C13S	RH_Console	563589	male	C36	FJB	561987	female
C13S	RH_Console	563590	female	C37.	Parcel_Rack_LH	561734	male
C15A	EvaporatorCmpt	568110	male	C37.	Parcel_Rack_LH	561735	female
C15A	EvaporatorCmpt	568109	female	C38.	Parcelrack	561734	male
C16	RJB	561577	male	C38.	Parcelrack	561735	female
C16	RJB	561605	female	C39	Parcelrack	562503	male
C17	RJB	560195	male	C39	Parcelrack	562507	female
C17	RJB	560169	female	C39A	Firesuppressioncmpt.	561782	male
C18	FJB	561986	male	C39A	Firesuppressioncmpt.	561781	female
C18	FJB	561987	female	C40	Dash	562485	male
C19	RJB	561986	male	C40	Dash	562486	female
C19	RJB	561987	female	C41	RJB	561782	male
C20A	Evap_Cmpt	562485	male	C41	RJB	561781	female
C20A	Evap_Cmpt	562486	female	C44_plug	FJB	561577	male
C20B	Evap_Cmpt	562485	male	C44_socket	FJB	561605	female
C20B	Evap_Cmpt	562486	female	C45	FJB	561643	male
C23	Evaporatorcmpt.	564034	male	C45	FJB	561642	female
C23	Evaporatorcmpt.	564035	female	C46	3rdlugg.cmpt.	562549	male
C24_plug	Evap_Cmpt	561690	male	C46	3rdlugg.cmpt.	562550	female
C24_socket	Evap_Cmpt	561566	female	C47	FJB	565207	male
C25	Parcel_Rack_LH	561550	male	C48	RJB	565208	male

CONNECTORS LIST

No	Location	Part #	Gender	No	Location	Part #	Gender
C49	FJB	562005	male	C94_socket	FJB	563590	female
C49	FJB	561714	female	C96	FJB	561646	male
C50	RJB	563933	male	C96	FJB	561645	female
C50	RJB	563932	female	C97	FJB	561643	male
C54	Engine_Cmpt.	563226	male	C97	FJB	561642	female
C54	Engine_Cmpt.	563613	female	C99	Enginecmpt.	562581	male
C54A	Ureacmpt	568110	male	C99	Enginecmpt.	562583	female
C54A	Ureacmpt	568109	female	C100	Evaporatorcmpt.	562477	male
C54B	Engine_Cmpt.	562477	male	C100	Evaporatorcmpt.	562479	female
C54B	Engine_Cmpt.	562479	female	C100S	Evaporator_Cmpt.	562477	male
C55	Evap_Cmpt	561577	male	C100S	Evaporator_Cmpt.	562479	female
C55	Evap_Cmpt	561605	female	C101	Service_Cmpt	561690	male
C59	RJB	561643	male	C101	Service_Cmpt	561566	female
C59	RJB	561642	female	C103_plug	FJB	562485	male
C63	Entrace_Door	562581	male	C103_socket	FJB	562486	female
C63	Entrace_Door	562583	female	C105_plug	FJB	562581	male
C64	Engine_Cmpt	568110	male	C105_socket	FJB	562583	female
C64	Engine_Cmpt	568109	female	C106_plug	FJB	562581	male
C64X	Aisle_section	560898	male	C106_socket	FJB	562583	female
C64X	Aisle_section	560900	female	C107A	Enginecmpt.	562885	female
C66_plug	Evap_Cmpt	561577	male	C107A	Enginecmpt.	562884	female
C66_socket	Evap_Cmpt	561605	female	C107B	Enginecmpt.	562885	female
C67	Parcelrack	561734	male	C107B	Enginecmpt.	562884	female
C67	Parcelrack	561735	female	C107C	Enginecmpt.	562885	female
C69_plug	FJB	561690	male	C107C	Enginecmpt.	562884	female
C69_socket	FJB	561566	female	C108	Dash	562557	male
C70	FJB	562557	male	C108	dash	562558	female
C70	FJB	562558	female	C110	Dash	568110	male
C71	FJB	561646	male	C110	Dash	568109	female
C71	FJB	561645	female	C119A	Rear_engine_door	568110	male
C72	FJB	561646	male	C119A	Rear_engine_door	568109	female
C72	FJB	561645	female	C124	DashBoard	562503	male
C74	FJB	561645	female	C124	DashBoard	562507	female
C74	FJB	561646	male	C131A	Engine_Cmpt	561782	male
C87	Engine_Cmpt	562485	male	C131A	Engine_Cmpt	561781	female
C87	Engine_Cmpt	562486	female	C131B	Engine_Cmpt	561782	male
C88	WCL_Cmpt.	563226	male	C131B	Engine_Cmpt	561781	female
C88	WCL_Cmpt.	563613	female	C144	RJB	560852	male
C90	RJB	563582	male	C144	RJB	560851	female
C90	RJB	563583	female	C152	Cond_Cmpt	561611	male
C91	RJB	562285	male	C152	Cond_Cmpt	561610	female
C91	RJB	562282	female	C162	FrontCab	561690	male
C94_plug	FJB	563589	male	C162	FrontCab	561566	female

CONNECTORS LIST

No	Location	Part #	Gender	No	Location	Part #	Gender
C164A	RH_Trapezoidal_Window	561690	male	C225	FJB	562649	female
C164A	RH_Trapezoidal_Window	561566	female	C226	FJB	562650	male
C164AA	RH_Trapezoidal_Window	561690	male	C226	FJB	562649	female
C164AA	RH_Trapezoidal_Window	561566	female	C226a_plug	FJB	562650	male
C164B	RH_Trapezoidal_Window	561782	male	C226a_socket	FJB	562649	female
C164B	RH_Trapezoidal_Window	561781	female	C279	Service_Cmpt	562477	male
C164BB	RH_Trapezoidal_Window	561782	male	C279	Service_Cmpt	562479	female
C164BB	RH_Trapezoidal_Window	561781	female	C279A	Service_Cmpt	562477	male
C167	FJB	561577	male	C279A	Service_Cmpt	562479	female
C167	FJB	561605	female	C284	Parcel_Rack	561782	male
C170	LH_Console	561637	male	C284	Parcel_Rack	561781	female
C170	LH_Console	561636	female	C284_1	Parcel_Rack	561782	male
C171	LH_Console	561646	male	C284_1	Parcel_Rack	561781	female
C171	LH_Console	561645	female	C284_2	Parcel_Rack	561782	male
C175	RJB	563226	male	C284_2	Parcel_Rack	561781	female
C175	RJB	563613	female	C284_3	Parcel_Rack	561782	male
C175.	RJB	563226	male	C284_3	Parcel_Rack	561781	female
C175.	RJB	563613	female	C284_4	Parcel_Rack	561782	male
C187	RJB	561577	male	C284_4	Parcel_Rack	561781	female
C187	RJB	561605	female	C284_5	Parcel_Rack	561782	male
C188	Evap_Cmpt	561577	male	C284_5	Parcel_Rack	561781	female
C188	Evap_Cmpt	561605	female	C284_6	Parcel_Rack	561782	male
C189	RJB	561986	male	C284_6	Parcel_Rack	561781	female
C189	RJB	561987	female	C333	Upper_front	561550	male
C193_plug	RJB	563589	male	C333	Upper_front	561667	female
C193_socket	RJB	563590	female	C355	RJB	563582	male
C194	FJB	563589	male	C355	RJB	565887	female
C194	FJB	563590	female	C356	Parcelrack	561710	male
C195	dash	563347	male	C356	Parcelrack	561709	female
C195	dash	560489	female	C357	Parcelrack	561847	male
C206	Parcel_Rack_RH	562503	male	C357	Parcelrack	561862	female
C206	Parcel_Rack_RH	562507	female	C380A	Dash	564222	male
C207	Parcel_Rack_LH	562503	male	C380A	Dash	564224	female
C207	Parcel_Rack_LH	562507	female	C381	Parcel_Rack	561847	male
C213	Parcel_Rack_LH	561515	male	C381	Parcel_Rack	561862	female
C213	Parcel_Rack_LH	561552	female	C382	Under_Seat	561580	male
C222	FJB	562477	male	C382	Under_Seat	561582	female
C222	FJB	562479	female	C397	RJB	562285	male
C223	FJB	563227	male	C397	RJB	562282	female
C223	FJB	563614	female	C397.	RJB	562285	male
C224	FJB	561637	male	C397.	RJB	562282	female
C224	FJB	561636	female	C430	LH_Console	562363	male
C225	FJB	562650	male	C430	LH_Console	561188	female

CONNECTORS LIST

No	Location	Part #	Gender	No	Location	Part #	Gender
C452	Dash	561986	male	C582	FJB	561566	female
C452	Dash	561987	female	C600	Dash	563226	male
C463	Rearaxlecmpt	568112	male	C600	Dash	563613	female
C463	Rearaxlecmpt	568111	female	C600A	Dash	563226	male
C464	FJB	564222	male	C600A	Dash	563613	female
C464	FJB	564224	female	C600B	Dash	563226	male
C464A	Dash	564222	male	C600B	Dash	563613	female
C464A	Dash	564224	female	C601	LHRoofWinAjar	561476	male
C464B	FJB	564222	male	C601	LHRoofWinAjar	561477	female
C464B	FJB	564224	female	C602	RH_Roof_Win_Ajar	561476	male
C465	Parcelrack	562581	male	C602	RH_Roof_Win_Ajar	561477	female
C465	Parcelrack	562583	female	C603	RHRoofWinAjar	561476	male
C506	FJB	561687	male	C603	RHRoofWinAjar	561477	female
C506	FJB	561685	female	C603.	Parcelrack	561669	male
C542	Parcelrack	561550	male	C603.	Parcelrack	561670	female
C542	Parcelrack	561667	female	C614	Passenger_Area	563071	male
C558	Parcelrack	562503	male	C614	Passenger_Area	563040	female
C558	Parcelrack	562507	female	C615	Passenger_Area	563071	male
C564	Parcelrack	562503	male	C615	Passenger_Area	563040	female
C564	Parcelrack	562507	female	C617	Mirror_LH	563801	male
C564_Sp	Parcelrack	562503	male	C617	Mirror_LH	563800	female
C564_Sp	Parcelrack	562507	female	C618	Mirror_RH	563801	male
C566	Parcelrack	562503	male	C618	Mirror_RH	563800	female
C566	Parcelrack	562507	female	C621	Aisle_section	560898	male
C567	Parcelrack	562503	male	C621	Aisle_section	560900	female
C567	Parcelrack	562507	female	C624_plug	Rear_Galley	561690	male
C574	Parcel_Rack_RH	562549	male	C624_socket	Rear_Galley	561566	female
C574	Parcel_Rack_RH	562550	female	C626	FJB	562485	male
C575	Parcel_Rack_RH	562503	male	C626	FJB	562486	female
C575	Parcel_Rack_RH	562507	female	C629	DashBoard	561690	male
C576B	Parcel_Rack_RH	562006	male	C629	DashBoard	561566	female
C576B	Parcel_Rack_RH	560908	female	C630	Parcel_Rack	561690	male
C576BB	Parcelrack	562006	male	C630	Parcel_Rack	561566	female
C576BB	Parcelrack	560908	female	C633	Aisle_section	560898	male
C577A	Parcel_Rack	562006	male	C633	Aisle_section	560900	female
C577A	Parcel_Rack	560908	female	C634	Aisle_section	560898	male
C577AA	Parcelrack	562006	male	C634	Aisle_section	560900	female
C577AA	Parcelrack	560908	female	C636	Aisle_section	560898	male
C578	Parcel_Rack_LH	562503	male	C636	Aisle_section	560900	female
C578	Parcel_Rack_LH	562507	female	C645	Aisle_section	560898	male
C579	Parcel_Rack_LH	562549	male	C645	Aisle_section	560900	female
C579	Parcel_Rack_LH	562550	female	C660	Rear_Galley	562646	male
C582	FJB	561690	female	C660	Rear_Galley	562647	female

CONNECTORS LIST

No	Location	Part #	Gender	No	Location	Part #	Gender
C662	FJB	562477	male	C_Mo9	Evap_Cmpt	561577	male
C662	FJB	562479	female	C_Mo9	Evap_Cmpt	561605	female
C700	FJB	561637	male	C_Mo9:2	Evap_Cmpt	561577	male
C700	FJB	561636	female	C_Mo9:2	Evap_Cmpt	561605	female
C710	Front_LH_ParcelRack	561637	male	C_Se51	dash	563589	male
C710	Front_LH_ParcelRack	561636	female	C_Se51	dash	563590	female
C752_plug	Parcel_Rack	901062	male	C_USB	Parcel_Rack	562069	male
C752_socket	Parcel_Rack	901283	female	C_USB	Parcel_Rack	562070	female
C753_plug	Parcel_Rack	901062	male	CCAN1	FJB	562650	male
C753_socket	Parcel_Rack	901283	female	CCAN1	FJB	562649	female
C766	Parcelrack	561662	male	CCAN2	FJB	562650	male
C766	Parcelrack	561661	female	CCAN2	FJB	562649	female
C768	Parcel_Rack	901062	male	CCAN3	FJB	562650	male
C768	Parcel_Rack	901283	female	CCAN3	FJB	562649	female
C769	Parcel_Rack	901062	male	CCAN4	FJB	562650	male
C769	Parcel_Rack	901283	female	CCAN4	FJB	562649	female
C777	Dash	562477	male	CCust	RJB	562477	male
C777	Dash	562479	female	CCust	RJB	562479	female
C_A60DB	Parcel_Rack	563071	male	CCust.	RJB	562477	male
C_A60DB	Parcel_Rack	563040	female	CCust.	RJB	562479	female
C_A69R	Parcel_Rack	563025	male	CFHPR1	Parcelrack	564560	male
C_A97	Dash	563226	male	CIND-1.A	Parcelrack	560908	female
C_A97	Dash	563613	female	CIND-1.B	Parcelrack	560908	female
C_ALT	Enginecmpt.	562581	male	CIND-2.A	Parcelrack	560908	female
C_ALT	Enginecmpt.	562583	female	CIND-2.B	Parcelrack	560908	female
C_ALT3	Enginecmpt.	562477	male	CIND-11.A	Parcelrack	560908	female
C_ALT3	Enginecmpt.	562479	female	CIND-11.B	Parcelrack	560908	female
C_AUDIO_AUX	Parcel_Rack	562557	male	CINDWC-1.A	Parcelrack	560908	female
C_AUDIO_AUX	Parcel_Rack	562558	female	CINDWC-1.B	Parcelrack	560908	female
C_Audio_HDMI_	Parcel_Rack	901062	male	CL1	FJB	562485	male
C_Audio_HDMI_	Parcel_Rack	901283	female	CL1	FJB	562486	female
C_Audio_HDMI_	Parcel_Rack	901062	male	CL58A	Aisle_Section	560898	male
C_Audio_HDMI_	Parcel_Rack	901283	female	CL58A	Aisle_Section	560900	female
C_AUX	Parcelrack	563071	male	CP1	Passenger_Area	561782	male
C_AUX	Parcelrack	563040	female	CP1	Passenger_Area	561781	female
C_AUX_2	Parcelrack	563071	male	CP2	Passenger_Area	561782	male
C_AUX_2	Parcelrack	563040	female	CP2	Passenger_Area	561781	female
C_INV1	Parcelrack	562337	male	CP3	Passengersarea	561782	male
C_INV1	Parcelrack	562338	male	CP3	Passengersarea	561781	female
C_INV2	Parcelrack	562337	male	CP4	Passenger_Area	561782	male
C_INV2	Parcelrack	562338	male	CP4	Passenger_Area	561781	female
C_LineOut	Parcelrack	563962	male	CP5	Passenger_Area	561782	male
C_LineOut	Parcelrack	564489	female	CP5	Passenger_Area	561781	female

CONNECTORS LIST

No	Location	Part #	Gender	No	Location	Part #	Gender
CPA17B	RJB	562337	male	L38	Parcelrack	560898	male
CPA17B	RJB	562338	female	L39	Parcelrack	560898	male
CSo53	Rear_axle_cmpt.	561690	male	L40	Parcelrack	560898	male
CSo53	Rear_axle_cmpt.	561566	female	L41	Parcelrack	560898	male
CSw102	Rear_vehicule	562549	male	L42	Parcelrack	560898	male
CSw102	Rear_vehicule	562550	female	L43	Parcelrack	560898	male
CSX1	Engine_Cmpt	563135	male	L44	Parcelrack	560898	male
CSX1	Engine_Cmpt	563134	female	L45	Parcelrack	560898	male
CSX3	Engine_Cmpt	563135	male	L46	Parcelrack	560898	male
CSX3	Engine_Cmpt	563134	female	L47	Parcelrack	560898	male
CT_IN	Rear_Vehicle	560167	male	L48	Parcelrack	560898	male
CT_IN	Rear_Vehicle	560159	female	L49	Parcelrack	560898	male
CT_IN2	Engine_Cmpt	560167	male	L50	Parcelrack	560898	male
CT_IN2	Engine_Cmpt	560159	female	L51	Parcelrack	560898	male
CT_Out	Rear_Vehicle	560233	female	L52	Parcelrack	560898	male
EI	Enginecmpt.	563739	male	L52	Parcelrack	560900	female
L1A	Engine_Cmpt	560774	male	L52A	Parcelrack	560898	male
L16.A	Frontroof	562615	female	L53	Parcelrack	560898	male
L16.B	Frontroof	562615	female	L53	Parcelrack	560900	female
L17.A	Frontroof	562615	female	L53A	Parcelrack	560898	male
L17.B	Frontroof	562615	female	L54	Parcelrack	560898	male
L18	Entrance_Door	562549	male	L54	Parcelrack	560900	female
L19	Entracedoor	562486	female	L54A	Parcelrack	560898	male
L20	Entracedoorstep	562486	female	L55	Parcelrack	560898	male
L21	Upper_front	562486	female	L55	Parcelrack	560900	female
L22	Upper_front	562486	female	L55A	Parcelrack	560898	male
L23	Upper_front	562486	female	L56	Parcelrack	560898	male
L24	Upper_front	562486	female	L56	Parcelrack	560900	female
L25	Upper_front	562486	female	L56A	Parcelrack	560898	male
L26	Upper_front	562486	female	L57	Parcelrack	560898	male
L27	Upper_front	562486	female	L57	Parcelrack	560900	female
L28	Parcelrack	560898	male	L57A	Parcelrack	560898	male
L29	Parcelrack	560898	male	L58	Parcelrack	560898	male
L30	Parcelrack	560898	male	L58	Parcelrack	560900	female
L30A.A	Parcelrack	560898	male	L58A	Parcelrack	560898	male
L30B.A	Parcelrack	560898	male	L63	Front_Side_LH	562155	male
	Parcelrack	560898	male	L64	Outside_Front_RH	562155	male
	Parcelrack	560898	male	L64X	Aisle_Section	560898	male
L33	Parcelrack	560898	male	L65	Outside_Front_LH	562155	male
L34	Parcelrack	560898	male	L66	Out_Side_Front_LH	562155	male
L35	Parcelrack	560898	male	L67	4th_Lugg_Cmpt	562155	male
L36	Parcelrack	560898	male	L68	4th_Lugg_Cmpt	562155	male
L37	Parcelrack	560898	male	L69	4th_Lugg_Cmpt	562155	male

CONNECTORS LIST

No	Location	Part #	Gender	No	Location	Part #	Gender
L70	4th_Lugg_Cmpt	562155	male	L174A	Parcelrack	563590	female
L72	Rear_Vehicle	562155	male	L175	Engine_Cmpt.	563590	female
L74	Rear_Vehicle	562155	male	L176	5th_Lugg_Cmpt	561247	male
L75	Rearenginedoor	562155	male	L177	5th_Lugg_Cmpt	561247	male
L76	Rear_engine_door	562155	male	L178	3rd_Lugg_Cmpt	561247	male
L81.A	Rear_Vehicle	562835	female	L179	3rd_Lugg_Cmpt	561247	male
L81.B	Rear_Vehicle	562834	male	L180	2nd_Lugg_Cmpt	561247	male
L82A	Rearvehicule	562348	female	L181	2nd_Lugg_Cmpt	561247	male
L83A	Rearvehicule	562348	female	L182	1st_Lugg_Cmpt	561247	male
L84	Rear_roof	562486	female	L183	1st_Lugg_Cmpt	561247	male
L85	Rear_roof	562486	female	L184	Servicecmpt.	561247	male
L86	Rear_roof	562486	female	L185.A	Servicecmpt.	561539	male
L87	Rear_roof	562486	female	L185.B	Servicecmpt.	561539	male
L88	Rear_roof	562486	female	L186.A	Dash	561539	male
L89	Rear_roof	562486	female	L186.B	Dash	561539	male
L90	Rear_roof	562486	female	L187	Engine_Cmpt	561690	male
L93.B	Engine_Cmpt.	563069	female	L188	Service_Cmpt	562486	female
L94.B	Engine_Cmpt.	563069	female	L193.A	Dash	560488	female
L95	Outside_Front_LH	562485	male	L193.B	Dash	560488	female
L95A	Outside_Front_LH	562485	male	L194.A	Dash	562019	female
L96	Outside_Front_RH	562485	male	L194.B	Dash	560488	female
L96A	Outside_Front_RH	562485	male	L195.A	Dash	560488	female
L98.B	Outside_Front_RH	563069	female	L195.B	Dash	560488	female
L140	Lavatory	561247	male	L199	Enginecmpt.	562848	male
L141	Upper_front	561247	male	L201	Upper_front	561247	male
L142	Lavatory	562006	male	L202	Upper_front	561247	male
L143	Parcel_rack	561186	male	L203	RH_Console	561690	male
L144	Parcelrack	561186	male	L204	Parcel_Rack_RH	562803	male
L145	Parcelrack	561186	male	L205	Enginecmpt.	562485	male
L146	Parcelrack	561186	male	L206	Parcel_Rack_RH	562803	male
L147	Parcelrack	561186	male	L211	Entrace_Door_step	562486	female
L148	Parcelrack	561186	male	L212	outside_rear_LH_RH	563589	male
L149	Parcelrack	561186	male	L213	outside_rear_LH_RH	563589	male
L150	Parcelrack	561186	male	L214	outside_rear_LH_RH	563589	male
L151	Parcelrack	561186	male	L243	Parcelrack	561186	male
L152	Parcelrack	561186	male	L244	Parcelrack	561186	male
L153	Parcelrack	561186	male	L245	Parcelrack	561186	male
L154	Parcelrack	561186	male	L246	Parcelrack	561186	male
L155	Parcelrack	561186	male	L247	Parcel_rack	561186	male
L156	Parcelrack	561186	male	L248	Parcelrack	561186	male
L157	Parcelrack	561186	male	L249	Parcelrack	561186	male
L158	Parcelrack	561186	male	L250	Parcel_rack	561186	male
L173	Parcelrack	563590	female	L251	Parcel_rack	561186	male

CONNECTORS LIST

No	Location	Part #	Gender	No	Location	Part #	Gender
L252	Parcelrack	561186	male	Mic_Driver_2.A	Parcel_rack	560999	male
L253	Parcel_rack	561186	male	Mic_Driver_3.A	Parcel_rack	560999	male
L254	Parcelrack	561186	male	Mic_Guide_1.A	Parcel_rack	560999	male
L255	Parcel_rack	561186	male	Mic_Guide_2.A	Parcel_rack	560999	male
L256	Parcelrack	561186	male	Mic_Guide_3.A	Parcel_rack	560999	male
L257	Parcelrack	561186	male	Mo3	Dash	561667	female
L258	Parcel_rack	561186	male	Mo4	Dash	564161	male
L282	Engine_Cmpt	561690	male	Mo5	Upper_front	561550	male
L285.A	Rear_Vehicle	562835	female	Mo6	Front_vehicle	561690	male
L285.B	Rear_Vehicle	562834	male	Mo7	Cond cmpt	563691	male
L286.A	Rear_Vehicle	562835	female	Mo8	Cond cmpt	563691	male
L286.B	Rear_Vehicle	562834	male	Mo10	Parcel_rack	561515	male
L290	Engine_door	562565	female	Mo11	Parcel_rack	561515	male
L291	Engine_door	562565	female	Mo12	Engine_Cmpt	561690	male
L298A	Enginecmpt.	563590	female	Mo13	Engine_Cmpt	561690	female
L306	RJBcmpt.	561247	male	Mo14	Engine_Cmpt	561566	female
L309.	Rear_LH_Lugg	564576	male	Mo15	Front_Ceiling	560900	female
L309D.	Drivers_Area	564576	male	Mo16	Front_Ceiling	560900	female
L310.	Rear_LH_Lugg	564576	male	Mo17	RH_Console	563626	male
L310D.	Drivers_Area	564576	male	Mo18	Fr_Service_Door	562474	male
L314	Front_vehicle	562789	male	Mo19	Fr_Service_Door	562474	male
L315	Front_vehicle	562789	male	Mo20	Fr_Service_Door	562474	male
L319	Under_WCL_platform	561247	male	Mo21	Upper_front	561186	male
L350A.A	Rearaxlecmpt.	564552	male	Mo22	RH_Console	561186	male
L350A.B	Rearaxlecmpt.	563340	male	Mo27	Cond cmpt	563691	male
L350A.C	Rearaxlecmpt.	562251	male	Mo28	Cond cmpt	563691	male
L600	Luggage_Cmpt	562155	male	Mo54	Service_Cmpt	562474	male
L601	Luggage_Cmpt	562155	male	Mo61	Parcel_rack	561248	female
L602	Luggage_Cmpt	562155	male	Mo62	FrontHatch	562486	female
L603	Luggage_Cmpt	562155	male	Mo63	RearHatch	562486	female
L604	Luggage_Cmpt	562155	male	Mo65	Enginecmpt.	568089	male
L605	Luggage_Cmpt	562155	male	Mo67	Enginecmpt.	568089	male
L606	Luggage_Cmpt	562155	male	Mo68	Enginecmpt.	568089	male
L607	Luggage_Cmpt	562155	male	Mo69	Enginecmpt.	568089	male
L634	Aisle_Section	560898	male	Mo70	Enginecmpt.	568089	male
L635	Aisle_Section	560898	male	Mo71	Enginecmpt.	568089	male
L650.A	Aisle_Section	560898	male	Mo72	Enginecmpt.	568089	male
L660_1	Rear_Galley	560898	male	Mo73	Enginecmpt.	568089	male
L660_2	Rear_Galley	560898	male	PC1	FJB	562650	male
L660_3	Rear_Galley	560898	male	PC1	FJB	562649	female
L661.A	Rear_Galley	560081	female	PF	FJB	561782	male
L661.B	Rear_Galley	560081	female	PF	FJB	561781	female
Mic_Driv	Parcel_rack	560999	male	PF1	Passenger_Area	561782	male

CONNECTORS LIST

No	Location	Part #	Gender	No	Location	Part #	Gender
PF1	Passenger_Area	561781	female	Res31	Ureacmpt.	562350	male
PF1A	Passenger_Area	561782	male	Res32	Ureacmpt.	563764	female
PF1A	Passenger_Area	561781	female	Res46	FJB	563590	female
Pot2	Dash	561550	male	Res53	dash	563590	female
PR	Parcelrack	561782	male	Res99	dash	563590	female
PR	Parcelrack	561781	female	Se2	Service_Cmpt	561566	female
PR1	Passenger_Area	561782	male	Se4	Window_RH	561477	female
PR1	Passenger_Area	561781	female	Se5	Window_RH	561477	female
PR1A	Passenger_Area	561782	male	Se6	Window_RH	561477	female
PR1A	Passenger_Area	561781	female	Se7	Window_LH	561477	female
R1	RJB	562486	female	Se8	Window_LH	561477	female
R3	RJB	563409	male	Se9	Window_LH	561477	female
R4	FJB	564496	male	Se10	FJB	561477	female
R5	RJB	564496	male	Se11.A	Cond_Cmpt	560082	female
R12	Evap_Cmpt	563409	male	Se11.B	Cond_Cmpt	560082	female
R16	RJB	564496	male	Se11.C	Cond_Cmpt	560082	female
R20	RJB	564496	male	Se13	Engine_Cmpt	562350	male
R21	FJB	560525	male	Se14.A	Driver_Area	561782	male
R23A	FJB	564496	male	Se14.B	Driver_Area	561781	female
R26	Evap_Cmpt	564496	male	Se15	RH_Console	560898	male
R27	Dash	564496	male	Se17	Entrace_Door	560081	female
R28	FJB	564496	male	Se18	Servicecmpt.	561566	female
R29	RJB	563409	male	Se19_P	Service_Cmpt	563677	male
R30	FJB	564496	male	Se19_S	Service_Cmpt	563677	male
R31	FJB	564496	male	Se20	Evap_Cmpt	562426	male
R34	RJB	564210	male	Se21	Dash	561248	female
R36	Dash	564496	male	Se23	Engine_Cmpt	563159	male
R37	Dash	564496	male	Se24	Evap_Cmpt	563758	female
R38	FJB	564496	male	Se25	Passenger_Area	561248	female
R40	RJB	564496	male	Se28	Pneumatic_plate	561690	male
R47	Parcelrack	564496	male	Se29	Engine_Cmpt	561566	female
R72	5th_Bay	563409	male	Se30	Enginedoor	562877	female
R73	5th_Bay	563409	male	Se31	Enginedoor	562877	female
R_12VIS	Parcel_rack	564496	male	Se32	Rear_Axle_Cmpt	562426	male
Res3.A	ParcelRack	563590	female	Se33	Rear_Axle_Cmpt	562856	male
Res4	RH_Console	563590	female	Se34	Rear_Axle_Cmpt	562426	male
Res6	FJB	563590	female	Se35	Rear_Axle_Cmpt	562426	male
Res6A	FJB	563589	male	Se36	Rear_Axle_Cmpt	562427	male
Res6A	FJB	563590	female	Se37	Front_Axle_LH	641132	female
Res6B	FJB	563589	male	Se38	Front_Axle_RH	641132	female
Res6B	FJB	563590	female	Se39	Rear_Axle_LH	641132	female
Res7	dash	563590	female	Se40	Rear_Axle_LH	641132	female
Res15	Engine_Cmpt	561782	male	Se41	Condensor_cmpt.	562877	female

CONNECTORS LIST

No	Location	Part #	Gender	No	Location	Part #	Gender
Se45	Servicecmpt.	563409	male	So52	Rearaxlecmpt.	564045	female
Se46	Rearaxlecmpt.	562348	female	So54	Enginecmpt.	564045	female
Se49	Engine_Cmpt	561690	male	spBar4	Enginecmpt.	564135	male
Se51	Driverseat	563589	male	spBar5	Enginecmpt.	564135	male
Se53	Service_Cmpt	563159	female	spBar6	Enginecmpt.	564135	male
Se54	Service_Cmpt	563159	female	spBar7	Enginecmpt.	564135	male
Se55	Service_Cmpt	563159	female	spBar11	Engine_Cmpt.	564135	male
Se56	WCLdoor	562479	female	spBar12	Engine_Cmpt.	564135	male
Se60	Service_Cmpt	563409	male	spBar13	Enginecmpt.	564135	male
Se63	Rearaxlecmpt.	641132	female	spBar14	Enginecmpt.	564135	male
Se64	Rearaxlecmpt.	641132	female	spBar15	Enginecmpt.	564135	male
Se65	Dash	564042	female	spBar16	Enginecmpt.	564135	male
Se66	FJB	564039	female	spBar19	Condensorcmpt.	564135	male
Se67	Frontaxlecmpt.	563159	female	spBar20	Condensorcmpt.	564135	male
Se69	Frontaxlecmpt.	563159	female	spBar21	Condensorcmpt.	564135	male
Se74	Rear_Axle_Cmpt	563340	male	spBar22	Enginecmpt.	564135	male
Se79	Front_Axle	563340	male	spBar23	Enginecmpt.	564135	male
Se89	EngineCmpt	562350	male	spBar24	Enginecmpt.	564135	male
Se94	WCLdoor	562877	female	spBar26	Rear_axle_cmpt	564135	male
Se100	WCLdoor	562479	female	spBar27	Rear_axle_cmpt	564135	male
So3	RH_Console	641385	male	Spk1_L	Parcel_Rack_LH	563994	male
So4	RH_Console	641385	male	Spk1_R	Parcel_Rack_RH	563994	male
So5	RH_Console	641385	male	Spk2_L	Parcel_Rack_LH	563994	male
So6	RH_Console	641385	male	Spk2_R	Parcel_Rack_RH	563994	male
So7	Service_Cmpt	561566	female	Spk3_L	Parcel_Rack_LH	563994	male
So8	Servicecmpt.	641385	male	Spk3_R	Parcel_Rack_RH	563994	male
So9	Enginecmpt.	560016	female	Spk4_L	Parcel_Rack_LH	563994	male
So10	Cond_Cmpt	562485	male	Spk4_R	Parcel_Rack_RH	563994	male
So11	Cond_Cmpt	561566	female	Spk5_L	Parcel_Rack_LH	563994	male
So13	Evap_Cmpt	563204	female	Spk5_R	Parcel_Rack_RH	563994	male
So14	Servicecmpt.	641385	male	Spk6_L	Parcel_Rack_LH	563994	male
So15	Servicecmpt.	641385	male	Spk6_R	Parcel_Rack_RH	563994	male
So16	Servicecmpt.	641385	male	Spk7_L	Parcel_Rack_LH	563994	male
So17	Servicecmpt.	562848	male	Spk7_R	Parcel_Rack_RH	563994	male
So18	Pneumatic_plate	641385	male	Spk8_L	Parcel_Rack_LH	563994	male
So19	Pneumatic_plate	641385	male	Spk8_R	Parcel_Rack_RH	563994	male
So20	Servicecmpt.	641385	male	Spk9_L	Parcel_Rack_LH	563994	male
So21	Front_Axle_Cmpt	564046	female	Spk9_R	Parcel_Rack_RH	563994	male
So22	Front_Axle_Cmpt	564046	female	Spk10_L	Parcel_Rack_LH	563994	male
So23	Rear_Axle_Cmpt	564046	female	Spk10_R	Parcel_Rack_RH	563994	male
So24	Rear_Axle_Cmpt	564046	female	Spk11_L	Parcel_Rack_LH	563994	male
So27	Rearaxlecmpt.	564045	female	Spk11_R	Parcel_Rack_RH	563994	male
So50	Rearaxlecmpt.	564046	female	Spk12_L	Parcel_Rack_LH	563994	male

CONNECTORS LIST

No	Location	Part #	Gender	No	Location	Part #	Gender
Spk12_R	Parcel_Rack_RH	563994	male	Sw42	Lugg_Cmpt	561636	female
Spk13_L	Parcel_Rack_LH	563994	male	Sw43	LH_Console	561690	male
Spk13_R	Parcel_Rack_RH	563994	male	Sw44.A	FJB	562403	female
Spk14_L	Parcel_Rack_LH	563994	male	Sw44.B	FJB	562403	female
Spk14_R	Parcel_Rack_RH	563994	male	Sw45.A	5th_Lugg_Cmpt	562485	male
Spk15_L	Parcel_Rack_LH	563994	male	Sw45.B	5th_Lugg_Cmpt	562486	female
Spk15_R	Parcel_Rack_RH	563994	male	Sw46.A	5th_Lugg_Cmpt	562485	male
Spk16_L	Parcel_Rack_LH	563994	male	Sw46.B	5th_Lugg_Cmpt	562486	female
Spk16_R	Parcel_Rack_RH	563994	male	Sw47.A	3rd_Lugg_Cmpt	562485	male
SpkDr_L	Parcel_Rack_LH	563994	male	Sw47.B	3rd_Lugg_Cmpt	562486	female
SpkDr_R	Parcel_Rack_RH	563994	male	Sw48.A	3rd_Lugg_Cmpt	562485	male
Sub1.A	Passenger_Area	564004	female	Sw48.B	3rd_Lugg_Cmpt	562486	female
Sub2.A	Passenger_Area	564004	female	Sw49.A	2nd_Lugg_Cmpt	562485	male
Sw1.C258	Driver_Area	561188	female	Sw49.B	2nd_Lugg_Cmpt	562486	female
Sw1.C259	Driver_Area	561186	male	Sw50.A	2nd_Lugg_Cmpt	562485	male
Sw2	Dash	562763	male	Sw50.B	2nd_Lugg_Cmpt	562486	female
Sw3	Dash	562763	male	Sw51.A	1st_Lugg_Cmpt	562485	male
Sw4	Dash	562763	male	Sw51.B	1st_Lugg_Cmpt	562486	female
Sw5	Dash	562763	male	Sw52.A	1st_Lugg_Cmpt	562485	male
Sw6	Dash	562763	male	Sw52.B	1st_Lugg_Cmpt	562486	female
Sw10A	LH_Console	562763	male	Sw55.A	Lavatory	560488	female
Sw12	Dash	562763	male	Sw55.B	Lavatory	560488	female
Sw14	Dash	562763	male	Sw56.A	Lavatory	560488	female
Sw16	Dash	562763	male	Sw56.B	Lavatory	560488	female
Sw17	Dash	562763	male	Sw58	Engine_Cmpt.	563135	male
Sw18A	LH_Console	562763	male	Sw59	Enginecmpt.	563135	male
Sw20	Dash	562763	male	Sw63A	LHConsole	562763	male
Sw21	Dash	562763	male	Sw64.A	Service_Cmpt	560815	female
Sw24	Dash	562763	male	Sw64.B	Service_Cmpt	560815	female
Sw25	Dash	562763	male	Sw82	RJB	563135	male
Sw26	Dash	562763	male	Sw83.A	Dash	560082	female
Sw27	Dash	562763	male	Sw83.B	Dash	560815	female
Sw29	Dash	562763	male	Sw83.C	Dash	560082	female
Sw30	RJB	563135	male	Sw83.D	Dash	560815	female
Sw32	Dash	561477	female	Sw85	LH_Console	562749	male
Sw33	Dash	561476	male	Sw95.A	WCLdoor	562615	female
Sw34	Outside_Front_RH	562477	male	Sw95.B	WCLdoor	562615	female
Sw35	Console	562763	male	Sw95.C	WCLdoor	562615	female
Sw38	LH_Console	562763	male	Sw96.A	WCL_Door	562615	female
Sw39.A	RJB	562403	female	Sw96.B	WCL_Door	562615	female
Sw39.B	RJB	562403	female	Sw96.C	WCLdoor	562615	female
Sw40	LH_Console	561690	male	Sw97.A	WCLsystem	562615	female
Sw41	LH_Console	562749	male	Sw97.B	WCLsystem	562615	female

CONNECTORS LIST

No	Location	Part #	Gender	No	Location	Part #	Gender
Sw97.C	WCLsystem	562615	female	Y81	Cond_Cmpt	563793	male
Sw98.A	WCLsystem	562615	female				
Sw98.B	WCLsystem	562615	female				
Sw98.C	WCLsystem	562615	female				
Sw100	dash	562763	male				
Sw107	dash	562763	male				
Sw108	dash	562763	male				
Sw137	Dash	562763	male				
Sw149	Dash	562763	male				
Sw156	LH_Console	562763	male				
Sw157	Dash	562763	male				
Sw158	Dash	562763	male				
Sw629	Dash	562763	male				
Sw660	Rear_Galley	562763	male				
Sw661	Rear_Galley	562763	male				
Sw663	Rear_Galley	562763	male				
Sw670	dash	562763	male				
tab69	Parcelrack	561626	N/A				
Tab70a	Parcelrack	561626	N/A				
Tab70b	Parcelrack	561626	N/A				
tab71a	Parcelrack	561626	N/A				
TermL150	Parcel_rack	562505	N/A				
TermL248	Parcel_rack	562505	N/A				
VECF1	FJB	563186	male				
VECF2	FJB	563183	male				
VECF3	FJB	563185	male				
VECF4	FJB	563182	male				
VECF9	FJB	563448	male				
VECF10	FJB	563181	male				
VECF11	FJB	563184	male				
VECF12	FJB	563187	male				
VECR1	RJB	563186	male				
VECR2	RJB	563183	male				
VECR3	RJB	563185	male				
VECR4	RJB	563182	male				
VECR4.	RJB	563182	male				
VECR9	RJB	563448	male				
VECR10	RJB	563181	male				
VECR11	RJB	563184	male				
VECR12	RJB	563187	male				
VECT3	Rear_vehicule	563718	male				
VECT4	Rear_vehicule	563714	male				
Y80	Engine_Cmpt	563789	male				

CONNECTORS LIST

No	Location	Part #	Gender	No	Location	Part #	Gender
24SS_OP	Parcel_Rack_LH	563071	male	A34.L	Enginecmpt.	564269	male
24SS_OP	Parcel_Rack_LH	563040	female	A36.JA	FJB	562767	male
24SS_OP_2	Parcel_Rack_LH	563071	male	A36.JB	FJB	562765	male
24SS_OP_2	Parcel_Rack_LH	563040	female	A36.JC	FJB	562957	male
120V_inlet	Rearvehicule	561572	male	A39.P101	Parcel_Rack_LH	563201	male
A1	RJB	563975	male	A39.P901	Parcel_Rack_LH	563953	male
A2	FJB	563984	male	A40	Dash	563884	male
A3	Dash	562363	male	A41.J1	FJB	563679	male
A4.A	Service_Cmpt	562428	female	A41.J2	FJB	564037	male
A4.B	Service_Cmpt	561188	female	A41.J3	FJB	564004	male
A5	Service_Cmpt	562428	female	A60.A	Parcel_Rack_LH	563071	male
A6	Engine_Cmpt	562427	male	A60.B	Parcel_Rack_LH	562706	female
A7	Rear_Axle_Cmpt	563979	male	A60.C	Parcel_Rack_LH	901110	male
A9.Cx1	FJB	564041	female	A60.D	Parcel_Rack_LH	901110	male
A9.Cx2	FJB	563678	male	A60.E	Parcel_Rack_LH	560799	female
A9.Cx3	FJB	564037	female	A61.A	Parcel_Rack_LH	562464	male
A9.Cx4	FJB	564038	female	A61.B	Parcel_Rack_LH	562465	male
A10.X1	Engine_Cmpt	563135	male	A65..A	ParcelRack	563025	male
A10.X3	Engine_Cmpt	563134	female	A65..E	ParcelRack	563071	male
A11	LH_Console	563142	male	A65..G1	ParcelRack	563071	male
A14.A	Dash	562766	male	A65..G2	ParcelRack	563071	male
A14.B	Dash	562767	male	A65..G3	ParcelRack	563071	male
A14.C	Dash	562765	male	A65..H1	ParcelRack	561716	female
A15	Dash	562464	male	A65..H2	ParcelRack	561716	female
A17.D	RJB	561932	male	A65..H3	ParcelRack	561716	female
A18.J1	FJB	562794	male	A65..J	ParcelRack	562465	male
A18.J2	FJB	562650	male	A69L.A	Parcel_Rack_LH	563025	male
A19	LH_Console	562878	female	A69L.B1	Parcel_Rack_LH	bidon	male
A20	Parcel_Rack_LH	561477	female	A69L.B2	Parcel_Rack_LH	bidon	male
A24.A	RHConsol	561890	male	A69L.B3	Parcel_Rack_LH	bidon	male
A24.B	RHConsol	561566	female	A69L.B4	Parcel_Rack_LH	bidon	male
A25	Parcel_Rack_LH	563025	male	A69L.C	Parcel_Rack_LH	bidon	male
A26.P1	Enginecmpt.	562350	male	A69R.A	Parcel_Rack_LH	563025	male
A26.P2	Enginecmpt.	563322	female	A69R.B1	Parcel_Rack_LH	bidon	male
A26.P4	Enginecmpt.	568088	male	A69R.B2	Parcel_Rack_LH	bidon	male
A27	Service_Cmpt	562929	male	A69R.B3	Parcel_Rack_LH	bidon	male
A28	Service_Cmpt	562928	male	A69R.B4	Parcel_Rack_LH	bidon	male
A29.	Dash	562464	male	A69R.C	Parcel_Rack_LH	bidon	male
A29.	Dash	565871	female	A70a	ParcelRack	561540	female
A33.A	Parcel_Rack_LH	563071	male	A70b	ParcelRack	561540	female
A33.B	Parcel_Rack_LH	562330	female	A77	Parcelrack	564547	male
A34.J	Enginecmpt.	568118	male	A78	Parcelrack	562583	female
A34.K	Enginecmpt.	564270	male	A79	Parcelrack	562583	female

CONNECTORS LIST

No	Location	Part #	Gender	No	Location	Part #	Gender
A80	Parcelrack	562479	female	A122.A	ParcelRack	563960	male
A81.CN1	FJB	562767	male	A122.B	ParcelRack	563962	male
A81.CN3A	FJB	564741	male	A122.C1	ParcelRack	563956	male
A81.CN3B	FJB	564742	male	A122.C2	ParcelRack	563957	male
A83.A	FJB	565970	female	A122.C3	ParcelRack	563958	male
A95.A	Parcelrack	564489	female	A123.A	ParcelRack	563960	male
A95.B	Parcelrack	562706	female	A123.B	ParcelRack	563962	male
A95.C	Parcelrack	562706	female	A123.C1	ParcelRack	563956	male
A96.A	FJB	564205	male	A123.C2	ParcelRack	563957	male
A97	Dash	563226	male	A123.C3	ParcelRack	563958	male
A97A	FJB	563226	male	A124.A	ParcelRack	563960	male
A97A	FJB	563613	female	A124.B	ParcelRack	563962	male
A97B	FJB	563226	male	A124.C1	ParcelRack	563956	male
A97B	FJB	563613	female	A124.C2	ParcelRack	563957	male
A97S.A1	Dash	564401	male	A124.C3	ParcelRack	563958	male
A97S.A2	Dash	564402	male	A130	Driver_Area	563226	male
A97S.A3	Dash	564403	male	A131.A	Engine_Cmpt	561782	male
A99	FJB	564205	male	A131.B	Engine_Cmpt	561781	female
A100	AxleCompt	563632	male	A137A	Condensercmpt.	20429843	male
A101	AxleCompt	563632	male	A138	Cond_Cmpt	563787	male
A102	AxleCompt	563632	male	A139	Dash	564501	male
A103	Dash	562070	female	A150	Parcelrack	21280133	male
A107	EngineCmpt.	560336	male	A152.A	Parcelrack	561550	male
A108	RJB	562766	male	A152.B	Parcelrack	563071	male
A109A	FJB	564141	male	A152.C	Parcelrack	563071	male
A111	RJB	562550	female	A152.D	Parcelrack	563071	male
A113.A	Parcel_Rack_LH	563960	male	A152.E	Parcelrack	563071	male
A113.B	Parcel_Rack_LH	563962	male	A152.F	Parcelrack	563071	male
A113.C1	Parcel_Rack_LH	563956	male	A152.G	Parcelrack	563071	male
A113.C2	Parcel_Rack_LH	563957	male	A152.H	Parcelrack	563071	male
A113.C3	Parcel_Rack_LH	563958	male	A152.I	Parcelrack	563071	male
A114A	Dash	564252	male	A152.J	Parcelrack	563071	male
A116	Dash	563872	female	A152.K	Parcelrack	562779	male
A120.A	Dashboard	563960	male	A152.L	Parcelrack	562779	male
A120.B	Dashboard	563962	male	A162.	FrontCab	561637	male
A120.C1	Dashboard	563956	male	A162.A	FrontCab	561566	female
A120.C2	Dashboard	563957	male	A162.B	FrontCab	561782	male
A120.C3	Dashboard	563958	male	A164.A	RH_trapezoidal_window	561566	female
A121.USB	Dash	563878	male	A164.B	RH_trapezoidal_window	561782	male
A121.Vsa	Dash	563679	male	A165	DriverArea	560641	male
A121.Vsb	Dash	563678	male	A166	RearCab	561637	male
A121.Vsc	Dash	564037	male	A222M..A	DriverArea	563040	female
A121.Vsd	Dash	564118	male	A222M..B	DriverArea	565871	female

CONNECTORS LIST

No	Location	Part #	Gender	No	Location	Part #	Gender
A222M..C	DriverArea	564537	female	AE43.J3	FJB	565957	male
A222M.A	DriverArea	563040	female	AE44.J1	FJB	563679	male
A222M.B	DriverArea	565871	female	AE44.J2	FJB	564037	female
A222M.C	DriverArea	564537	female	AE44.J3	FJB	565957	male
A222W..A	OutsideFrontLH	563409	male	AE45.J1	FJB	563679	male
A222W..B	OutsideFrontLH	563409	male	AE45.J2	FJB	564037	female
A222W.A	OutsideFrontLH	563409	male	AE45.J3	FJB	565957	male
A222W.B	OutsideFrontLH	563409	male	AE46.J1	FJB	563679	male
A223M..A	INsideFrontRH	563040	female	AE46.J2	FJB	564037	female
A223M..B	INsideFrontRH	565871	female	AE46.J3	FJB	565957	male
A223M..C	INsideFrontRH	564537	female	AE47.J1	RH_console	563679	male
A223M.A	INsideFrontRH	563040	female	AE47.J2	RH_console	564037	female
A223M.B	INsideFrontRH	565871	female	AE47.J3	RH_console	565957	male
A223M.C	INsideFrontRH	564537	female	AE48.J1	RH_console	563679	male
A223W..A	OutsideFrontRH	563409	male	AE48.J2	RH_console	564037	female
A223W..B	OutsideFrontRH	563409	male	AE48.J3	RH_console	565957	male
A223W.A	OutsideFrontRH	563409	male	AE49..J1	RJB	563679	male
A223W.B	OutsideFrontRH	563409	male	AE49..J2	RJB	564037	male
A309.A	Lugg	564576	male	AE49..J3	RJB	565957	male
A309.B	Lugg	564576	male	AE49.J1	RJB	563679	male
A309.C	Lugg	561566	female	AE49.J2	RJB	564037	male
A310.A	Lugg	564576	male	AE49.J3	RJB	565957	male
A310.B	Lugg	564576	male	AE50..J1	RJB	563679	male
A310.C	Lugg	561566	female	AE50..J2	RJB	564037	male
A614.A	Parcelrack	561550	male	AE50..J3	RJB	565957	male
A614.C1	Parcelrack	563071	male	AE50.J1	RJB	563679	male
A614.C2	Parcelrack	563071	male	AE50.J2	RJB	564037	male
A614.C3	Parcelrack	563071	male	AE50.J3	RJB	565957	male
A614.C4	Parcelrack	563071	male	AE51.J1	RJB	563679	male
A614.C5	Parcelrack	563071	male	AE51.J2	RJB	564037	female
A614.C6	Parcelrack	563071	male	AE51.J3	RJB	565957	male
A614.I/O	ParcelRack	bidon	male	AE52..J1	RJB	563679	male
A614.P1	Parcelrack	562783	male	AE52..J2	RJB	564037	male
A614.P2	Parcelrack	562783	male	AE52..J3	RJB	565957	male
A614.P3	Parcelrack	562783	male	AE52.J1	RJB	563679	male
AE41.J1	FJB	563679	male	AE52.J2	RJB	564037	female
AE41.J2	FJB	564037	female	AE52.J3	RJB	565957	male
AE41.J3	FJB	564004	male	AE53.J1	LH_ParcelRack	563679	male
AE42.J1	FJB	563679	male	AE53.J2	LH_ParcelRack	564037	female
AE42.J2	FJB	564037	female	AE53.J3	LH_ParcelRack	565957	male
AE42.J3	FJB	564004	male	AE54.J1	Evaporatorcmpt.	563679	male
AE43.J1	FJB	563679	male	AE54.J2	Evaporatorcmpt.	564037	female
AE43.J2	FJB	564037	male	AE54.J3	Evaporatorcmpt.	565957	male

CONNECTORS LIST

No	Location	Part #	Gender	No	Location	Part #	Gender
AE55.J1	Dash	563679	male	C3S	RJB	563593	male
AE55.J2	Dash	564037	female	C3S	RJB	563590	female
AE55.J3	Dash	564004	male	C4	FJB	563580	male
AE56.J1	Dash	563679	male	C4	FJB	563581	female
AE56.J2	Dash	564037	male	C5	FJB	563589	male
AE56.J3	Dash	564004	male	C5	FJB	563590	female
AE57.J1	WCLcmpt.	563679	male	C5S	FJB	563589	male
AE57.J2	WCLcmpt.	564037	male	C5S	FJB	563590	female
AE57.J3	WCLcmpt.	564004	male	C6	FJB	563582	male
AltLL.A	Enginecmpt.	563746	female	C6	FJB	563583	female
AltLL.B	Enginecmpt.	560815	female	C7	Service_Cmpt	562581	male
AltLL.C	Enginecmpt.	564469	female	C7	Service_Cmpt	562583	female
AltLR.A	enginecmpt.	563746	female	C8	FJB	563227	male
AltLR.B	Enginecmpt.	560815	female	C8	FJB	563614	female
AltLR.C	Enginecmpt.	564469	female	C9	RJB	561986	male
AltUR.A	Enginecmpt.	563746	female	C9	RJB	561987	female
AltUR.B	Enginecmpt.	560815	female	C10	Engine_Cmpt	562581	male
AltUR.C	Enginecmpt.	564469	female	C10	Engine_Cmpt	562583	female
B85	Engine_Cmpt	563815	male	C11	Service_Cmpt	563580	male
B96	Engine_Cmpt	563821	male	C11	Service_Cmpt	563581	female
B96B	Engine_Cmpt	563823	male	C12	Engine_Cmpt	562581	male
B97	Engine_Cmpt	563816	male	C12	Engine_Cmpt	562583	female
B98	Engine_Cmpt	563817	male	C13_plug	RH_Console	563589	male
B99	Engine_Cmpt	563815	male	C13_socket	RH_Console	563590	female
B115A	Enginecmpt.	564226	male	C13S	RH_Console	563589	male
B142C	Condensercmpt.	563793	male	C13S	RH_Console	563590	female
B310	Enginecmpt.	565967	male	C15A	EvaporatorCmpt	568110	male
C1	FJB	563589	male	C15A	EvaporatorCmpt	568109	female
C1	FJB	563590	female	C16	RJB	561577	male
C1S	FJB	563589	male	C16	RJB	561605	female
C1S	FJB	563590	female	C17	RJB	560195	male
C2	Service_Cmpt	563580	male	C17	RJB	560169	female
C2	Service_Cmpt	563581	female	C18	FJB	561986	male
C2A	FJB	563580	male	C18	FJB	561987	female
C2A	FJB	563581	female	C19	RJB	561986	male
C2B	FJB	564034	male	C19	RJB	561987	female
C2B	FJB	564035	female	C20A	Evap_Cmpt	562485	male
C3_plug	RJB	563589	male	C20A	Evap_Cmpt	562486	female
C3_socket	RJB	563590	female	C20B	Evap_Cmpt	562485	male
C3AP	FJB	563589	male	C20B	Evap_Cmpt	562486	female
C3AP	FJB	563590	female	C23	Evaporatorcmpt.	564034	male
C3AS	FJB	563589	male	C23	Evaporatorcmpt.	564035	female
C3AS	FJB	563590	female	C24_plug	Evap_Cmpt	561690	male

CONNECTORS LIST

No	Location	Part #	Gender	No	Location	Part #	Gender
C24_socket	Evap_Cmpt	561566	female	C47	FJB	565207	male
C25	Parcel_Rack_LH	561550	male	C48	RJB	565208	male
C25	Parcel_Rack_LH	561667	female	C49	FJB	562005	male
C26	Ureacmpt.	563226	male	C49	FJB	561714	female
C26	Ureacmpt.	563613	female	C50	RJB	563933	male
C26A	Ureacmpt	568110	male	C50	RJB	563932	female
C26A	Ureacmpt	568109	female	C54	Engine_Cmpt.	563226	male
C26B	Ureacmpt.	563227	male	C54	Engine_Cmpt.	563613	female
C26B	Ureacmpt.	563614	female	C54A	Ureacmpt	568110	male
C29	4rd_Lugg_Cmpt	563651	male	C54A	Ureacmpt	568109	female
C29	3rd_Lugg_Cmpt	563652	female	C54B	Engine_Cmpt.	562477	male
C30	3rd_Lugg_Cmpt	561710	male	C54B	Engine_Cmpt.	562479	female
C30	3rd_Lugg_Cmpt	561709	female	C55	Evap_Cmpt	561577	male
C31W	Parcelrack	563227	male	C55	Evap_Cmpt	561605	female
C31W	Parcelrack	563614	female	C59	RJB	561643	male
C32	lavatory	561734	male	C59	RJB	561642	female
C32	Lavatory	561735	female	C63	Entrace_Door	562581	male
C32W	WCLcmpt.	561669	male	C63	Entrace_Door	562583	female
C32W	WCLcmpt.	561670	female	C64	Engine_Cmpt	568110	male
C33	WCLcmpt.	564034	male	C64	Engine_Cmpt	568109	female
C33	WCLcmpt.	564035	female	C64X	Aisle_section	560898	male
C34	RH_Console	561986	male	C64X	Aisle_section	560900	female
C34	RH_Console	561987	female	C66_plug	Evap_Cmpt	561577	male
C36	FJB	561986	male	C66_socket	Evap_Cmpt	561605	female
C36	FJB	561987	female	C67	Parcelrack	561734	male
C37.	Parcel_Rack_LH	561734	male	C67	Parcelrack	561735	female
C37.	Parcel_Rack_LH	561735	female	C69_plug	FJB	561690	male
C38.	Parcelrack	561734	male	C69_socket	FJB	561566	female
C38.	Parcelrack	561735	female	C70	FJB	562557	male
C39	Parcelrack	562503	male	C70	FJB	562558	female
C39	Parcelrack	562507	female	C71	FJB	561646	male
C39A	Firesuppressioncmpt.	561782	male	C71	FJB	561645	female
C39A	Firesuppressioncmpt.	561781	female	C72	FJB	561646	male
C40	Dash	562485	male	C72	FJB	561645	female
C40	Dash	562486	female	C74	FJB	561645	female
C41	RJB	561782	male	C74	FJB	561646	male
C41	RJB	561781	female	C87	Engine_Cmpt	562485	male
C44_plug	FJB	561577	male	C87	Engine_Cmpt	562486	female
C44_socket	FJB	561605	female	C88	WCL_Cmpt.	563226	male
C45	FJB	561643	male	C88	WCL_Cmpt.	563613	female
C45	FJB	561642	female	C90	RJB	563582	male
C46	3rdlugg.cmpt.	562549	male	C90	RJB	563583	female
C46	3rdlugg.cmpt.	562550	female	C91	RJB	562285	male

CONNECTORS LIST

No	Location	Part #	Gender	No	Location	Part #	Gender
C91	RJB	562282	female	C152	Cond_Cmpt	561611	male
C94_plug	FJB	563589	male	C152	Cond_Cmpt	561610	female
C94_socket	FJB	563590	female	C157_plug	FJB	561637	male
C96	FJB	561646	male	C157_socket	FJB	561636	female
C96	FJB	561645	female	C159	ParcelRack	561577	male
C97	FJB	561643	male	C159	ParcelRack	561605	female
C97	FJB	561642	female	C159_LH_plug	ParcelRack	561247	male
C99	Enginecmpt.	562581	male	C159_LH_socket	ParcelRack	561248	female
C99	Enginecmpt.	562583	female	C162	FrontCab	561690	male
C100	Evaporatorcmpt.	562477	male	C162	FrontCab	561566	female
C100	Evaporatorcmpt.	562479	female	C164A	RH_Trapezoidal_Window	561690	male
C100S	Evaporator_Cmpt.	562477	male	C164A	RH_Trapezoidal_Window	561566	female
C100S	Evaporator_Cmpt.	562479	female	C164AA	RH_Trapezoidal_Window	561690	male
C101	Service_Cmpt	561690	male	C164AA	RH_Trapezoidal_Window	561566	female
C101	Service_Cmpt	561566	female	C164B	RH_Trapezoidal_Window	561782	male
C103_plug	FJB	562485	male	C164B	RH_Trapezoidal_Window	561781	female
C103_socket	FJB	562486	female	C164BB	RH_Trapezoidal_Window	561782	male
C105_plug	FJB	562581	male	C164BB	RH_Trapezoidal_Window	561781	female
C105_socket	FJB	562583	female	C166	RrParcelRack	561637	male
C106_plug	FJB	562581	male	C166	RrParcelRack	561636	female
C106_socket	FJB	562583	female	C167	FJB	561577	male
C107A	Enginecmpt.	562885	female	C167	FJB	561605	female
C107A	Enginecmpt.	562884	female	C167.	FJB	561577	male
C107B	Enginecmpt.	562885	female	C167.	FJB	561605	female
C107B	Enginecmpt.	562884	female	C170	LH_Console	561637	male
C107C	Enginecmpt.	562885	female	C170	LH_Console	561636	female
C107C	Enginecmpt.	562884	female	C171	LH_Console	561646	male
C108	Dash	562557	male	C171	LH_Console	561645	female
C108	dash	562558	female	C175	RJB	563226	male
C110	Dash	568110	male	C175	RJB	563613	female
C110	Dash	568109	female	C175.	RJB	563226	male
C119A	Rear_engine_door	568110	male	C175.	RJB	563613	female
C119A	Rear_engine_door	568109	female	C187	RJB	561577	male
C124	DashBoard	562503	male	C187	RJB	561605	female
C124	DashBoard	562507	female	C188	Evap_Cmpt	561577	male
C129	Dash	563858	male	C188	Evap_Cmpt	561605	female
C129	Dash	563859	female	C189	RJB	561986	male
C131A	Engine_Cmpt	561782	male	C189	RJB	561987	female
C131A	Engine_Cmpt	561781	female	C193_plug	RJB	563589	male
C131B	Engine_Cmpt	561782	male	C193_socket	RJB	563590	female
C131B	Engine_Cmpt	561781	female	C194	FJB	563589	male
C144	RJB	560852	male	C194	FJB	563590	female
C144	RJB	560851	female	C195	dash	563347	male

CONNECTORS LIST

No	Location	Part #	Gender	No	Location	Part #	Gender
C195	dash	560489	female	C298	P.Rack	561611	male
C195A	dash	563347	male	C298	P.Rack	561610	female
C195A	dash	560489	female	C333	Upper_front	561550	male
C195B	dash	563347	male	C333	Upper_front	561667	female
C195B	dash	560489	female	C355	RJB	563582	male
C195C	dash	564222	male	C355	RJB	565887	female
C195C	dash	564224	female	C356	Parcelrack	561710	male
C206	Parcel_Rack_RH	562503	male	C356	Parcelrack	561709	female
C206	Parcel_Rack_RH	562507	female	C357	Parcelrack	561847	male
C207	Parcel_Rack_LH	562503	male	C357	Parcelrack	561862	female
C207	Parcel_Rack_LH	562507	female	C380A	Dash	564222	male
C213	Parcel_Rack_LH	561515	male	C380A	Dash	564224	female
C213	Parcel_Rack_LH	561552	female	C381	Parcel_Rack	561847	male
C222	FJB	562477	male	C381	Parcel_Rack	561862	female
C222	FJB	562479	female	C382	Under_Seat	561580	male
C223	FJB	563227	male	C382	Under_Seat	561582	female
C223	FJB	563614	female	C382.B_plug	Under_Seat	561637	male
C224	FJB	561637	male	C382.B_socket	Under_Seat	561636	female
C224	FJB	561636	female	C383_plug	RrSeatLH	562464	male
C225	FJB	562650	male	C383_socket	RrSeatLH	565871	female
C225	FJB	562649	female	C397	RJB	562285	male
C226	FJB	562650	male	C397	RJB	562282	female
C226	FJB	562649	female	C397.	RJB	562285	male
C226a_plug	FJB	562650	male	C397.	RJB	562282	female
C226a_socket	FJB	562649	female	C430	LH_Console	562363	male
C279	Service_Cmpt	562477	male	C430	LH_Console	561188	female
C279	Service_Cmpt	562479	female	C430.	LH_Console	562363	male
C279A	Service_Cmpt	562477	male	C430.	LH_Console	561188	female
C279A	Service_Cmpt	562479	female	C430..	LH_Console	562363	male
C284	Parcel_Rack	561782	male	C430..	LH_Console	561188	female
C284	Parcel_Rack	561781	female	C452	Dash	561986	male
C284_1	Parcel_Rack	561782	male	C452	Dash	561987	female
C284_1	Parcel_Rack	561781	female	C463	Rearaxlecmpt	568112	male
C284_2	Parcel_Rack	561782	male	C463	Rearaxlecmpt	568111	female
C284_2	Parcel_Rack	561781	female	C464	FJB	564222	male
C284_3	Parcel_Rack	561782	male	C464	FJB	564224	female
C284_3	Parcel_Rack	561781	female	C464A	Dash	564222	male
C284_4	Parcel_Rack	561782	male	C464A	Dash	564224	female
C284_4	Parcel_Rack	561781	female	C464B	FJB	564222	male
C284_5	Parcel_Rack	561782	male	C464B	FJB	564224	female
C284_5	Parcel_Rack	561781	female	C465	Parcelrack	562581	male
C284_6	Parcel_Rack	561782	male	C465	Parcelrack	562583	female
C284_6	Parcel_Rack	561781	female	C506	FJB	561687	male

CONNECTORS LIST

No	Location	Part #	Gender	No	Location	Part #	Gender
C506	FJB	561685	female	C600.Spare_plug	Dash	563226	male
C540	ParcelRack	562477	male	C600.Spare_socket	Dash	563613	female
C540	ParcelRack	562479	female	C600A	Dash	563226	male
C540._plug	ParcelRack	562477	male	C600A	Dash	563613	female
C540._socket	ParcelRack	562479	female	C600B	Dash	563226	male
C541	ParcelRack	563226	male	C600B	Dash	563613	female
C541	ParcelRack	563613	female	C601	LHRoofWinAjar	561476	male
C542	Parcelrack	561550	male	C601	LHRoofWinAjar	561477	female
C542	Parcelrack	561667	female	C602	RH_Roof_Win_Ajar	561476	male
C543	ParcelRack	561607	male	C602	RH_Roof_Win_Ajar	561477	female
C543	ParcelRack	561606	female	C602A	RH_Roof_Win_Ajar	561668	male
C545	ParcelRack	561550	male	C602A	RH_Roof_Win_Ajar	561551	female
C545	ParcelRack	561667	female	C603	RHRoofWinAjar	561476	male
C558	Parcelrack	562503	male	C603	RHRoofWinAjar	561477	female
C558	Parcelrack	562507	female	C603.	Parcelrack	561669	male
C564	Parcelrack	562503	male	C603.	Parcelrack	561670	female
C564	Parcelrack	562507	female	C606	Lugg._Cmpt	561577	male
C564_Sp	Parcelrack	562503	male	C606	Lugg._Cmpt	561605	female
C564_Sp	Parcelrack	562507	female	C612_plug	PRack	561687	male
C566	Parcelrack	562503	male	C612_socket	PRack	561685	female
C566	Parcelrack	562507	female	C614	Passenger_Area	563071	male
C567	Parcelrack	562503	male	C614	Passenger_Area	563040	female
C567	Parcelrack	562507	female	C615	Passenger_Area	563071	male
C574	Parcel_Rack_RH	562549	male	C615	Passenger_Area	563040	female
C574	Parcel_Rack_RH	562550	female	C617	Mirror_LH	563801	male
C575	Parcel_Rack_RH	562503	male	C617	Mirror_LH	563800	female
C575	Parcel_Rack_RH	562507	female	C618	Mirror_RH	563801	male
C576B	Parcel_Rack_RH	562006	male	C618	Mirror_RH	563800	female
C576B	Parcel_Rack_RH	560908	female	C619_plug	Dash	562485	male
C576BB	Parcelrack	562006	male	C619_socket	PRack	562486	female
C576BB	Parcelrack	560908	female	C621	Aisle_section	560898	male
C577A	Parcel_Rack	562006	male	C621	Aisle_section	560900	female
C577A	Parcel_Rack	560908	female	C624_plug	Rear_Galley	561690	male
C577AA	Parcelrack	562006	male	C624_socket	Rear_Galley	561566	female
C577AA	Parcelrack	560908	female	C626	FJB	562485	male
C578	Parcel_Rack_LH	562503	male	C626	FJB	562486	female
C578	Parcel_Rack_LH	562507	female	C629	DashBoard	561690	male
C579	Parcel_Rack_LH	562549	male	C629	DashBoard	561566	female
C579	Parcel_Rack_LH	562550	female	C630	Parcel_Rack	561690	male
C582	FJB	561690	female	C630	Parcel_Rack	561566	female
C582	FJB	561566	female	C633	Aisle_section	560898	male
C600	Dash	563226	male	C633	Aisle_section	560900	female
C600	Dash	563613	female	C633A	Aisle_section	560898	male

CONNECTORS LIST

No	Location	Part #	Gender	No	Location	Part #	Gender
C633A	Aisle_section	560900	female	C_ALT	Enginecmpt.	562583	female
C633B	Aisle_section	560898	male	C_ALT3	Enginecmpt.	562477	male
C633B	Aisle_section	560900	female	C_ALT3	Enginecmpt.	562479	female
C634	Aisle_section	560898	male	C_AUDIO_AUX	Parcel_Rack	562557	male
C634	Aisle_section	560900	female	C_AUDIO_AUX	Parcel_Rack	562558	female
C634A	Aisle_section	560898	male	C_AUDIO_AUX.	Parcel_Rack	562557	male
C634A	Aisle_section	560900	female	C_AUDIO_AUX.	Parcel_Rack	562558	female
C636	Aisle_section	560898	male	C_AUDIO_AUX_LH	Parcel_Rack	562557	male
C636	Aisle_section	560900	female	C_AUDIO_AUX_LH	Parcel_Rack	562558	female
C645	Aisle_section	560898	male	C_AUDIO_AUX_RH	Parcel_Rack	562557	male
C645	Aisle_section	560900	female	C_AUDIO_AUX_RH	Parcel_Rack	562558	female
C660	Rear_Galley	562646	male	C_Audio_HDMI_L	Parcel_Rack	901062	male
C660	Rear_Galley	562647	female	C_Audio_HDMI_L	Parcel_Rack	901283	female
C662	FJB	562477	male	C_Audio_HDMI_R	Parcel_Rack	901062	male
C662	FJB	562479	female	C_Audio_HDMI_R	Parcel_Rack	901283	female
C662._plug	FJB	562477	male	C_AUX	Parcelrack	563071	male
C662._socket	FJB	562479	female	C_AUX	Parcelrack	563040	female
C700	FJB	561637	male	C_AUX_2	Parcelrack	563071	male
C700	FJB	561636	female	C_AUX_2	Parcelrack	563040	female
C700:2	FJB	561637	male	C_INV1	Parcelrack	562337	male
C700:7	FJB	561636	female	C_INV1	Parcelrack	562338	male
C710	Front_LH_ParcelRack	561637	male	C_INV2	Parcelrack	562337	male
C710	Front_LH_ParcelRack	561636	female	C_INV2	Parcelrack	562338	male
C752_plug	Parcel_Rack	901062	male	C_LineOut	Parcelrack	563962	male
C752_socket	Parcel_Rack	901283	female	C_LineOut	Parcelrack	564489	female
C753_plug	Parcel_Rack	901062	male	C_Mo9	Evap_Cmpt	561577	male
C753_socket	Parcel_Rack	901283	female	C_Mo9	Evap_Cmpt	561605	female
C766	Parcelrack	561662	male	C_Mo9:2	Evap_Cmpt	561577	male
C766	Parcelrack	561661	female	C_Mo9:2	Evap_Cmpt	561605	female
C768	Parcel_Rack	901062	male	C_Se51	dash	563589	male
C768	Parcel_Rack	901283	female	C_Se51	dash	563590	female
C769	Parcel_Rack	901062	male	C_USB	Parcel_Rack	562069	male
C769	Parcel_Rack	901283	female	C_USB	Parcel_Rack	562070	female
C777	Dash	562477	male	CCAN1	FJB	562650	male
C777	Dash	562479	female	CCAN1	FJB	562649	female
C_159RH_plug	Dash	561247	male	CCAN2	FJB	562650	male
C_159RH_socket	Dash	561248	female	CCAN2	FJB	562649	female
C_A60DB	Parcel_Rack	563071	male	CCAN3	FJB	562650	male
C_A60DB	Parcel_Rack	563040	female	CCAN3	FJB	562649	female
C_A69R	Parcel_Rack	563025	male	CCAN4	FJB	562650	male
C_A97	Dash	563226	male	CCAN4	FJB	562649	female
C_A97	Dash	563613	female	CCust	RJB	562477	male
C_ALT	Enginecmpt.	562581	male	CCust	RJB	562479	female

CONNECTORS LIST

No	Location	Part #	Gender	No	Location	Part #	Gender
CCust.	RJB	562477	male	CSX1	Engine_Cmpt	563134	female
CCust.	RJB	562479	female	CSX3	Engine_Cmpt	563135	male
CFHPR1	Parcelrack	564560	male	CSX3	Engine_Cmpt	563134	female
CIND-1.A	Parcelrack	560908	female	CT_IN	Rear_Vehicle	560167	male
CIND-1.B	Parcelrack	560908	female	CT_IN	Rear_Vehicle	560159	female
CIND-2.A	Parcelrack	560908	female	CT_IN2	Engine_Cmpt	560167	male
CIND-2.B	Parcelrack	560908	female	CT_IN2	Engine_Cmpt	560159	female
CIND-11.A	Parcelrack	560908	female	CT_Out	Rear_Vehicle	560233	female
CIND-11.B	Parcelrack	560908	female	EI	Enginecmpt.	563739	male
CINDWC-1.A	Parcelrack	560908	female	L1A	Engine_Cmpt	560774	male
CINDWC-1.B	Parcelrack	560908	female	L16.A	Frontroof	562615	female
CL1	FJB	562485	male	L16.B	Frontroof	562615	female
CL1	FJB	562486	female	L17.A	Frontroof	562615	female
CL58A	Aisle_Section	560898	male	L17.B	Frontroof	562615	female
CL58A	Aisle_Section	560900	female	L18	Entrance_Door	562549	male
CL58B	Aisle_Section	560898	male	L19	Entracedoor	562486	female
CL58B	Aisle_Section	560900	female	L20	Entracedoorstep	562486	female
CMo61	Parcelrack	561247	male	L21	Upper_front	562486	female
CMo61	Parcelrack	561248	female	L22	Upper_front	562486	female
CP1	Passenger_Area	561782	male	L23	Upper_front	562486	female
CP1	Passenger_Area	561781	female	L24	Upper_front	562486	female
CP2	Passenger_Area	561782	male	L25	Upper_front	562486	female
CP2	Passenger_Area	561781	female	L26	Upper_front	562486	female
CP3	Passengersarea	561782	male	L27	Upper_front	562486	female
CP3	Passengersarea	561781	female	L28	Parcelrack	560898	male
CP4	Passenger_Area	561782	male	L29	Parcelrack	560898	male
CP4	Passenger_Area	561781	female	L30	Parcelrack	560898	male
CP5	Passenger_Area	561782	male	L30A.A	Parcelrack	560898	male
CP5	Passenger_Area	561781	female	L30B.A	Parcelrack	560898	male
CP7	Passenger_Area	562337	male	L31	Parcelrack	560898	male
CP7	Passenger_Area	562338	female	L32	Parcelrack	560898	male
CP_Dr	Passsection	561782	male	L33	Parcelrack	560898	male
CPA17B	RJB	562337	male	L34	Parcelrack	560898	male
CPA17B	RJB	562338	female	L35	Parcelrack	560898	male
CPmod	Passenger_Area	561782	male	L36	Parcelrack	560898	male
CPmod	Passenger_Area	561781	female	L37	Parcelrack	560898	male
CSo53	Rear_axle_cmpt.	561690	male	L38	Parcelrack	560898	male
CSo53	Rear_axle_cmpt.	561566	female	L39	Parcelrack	560898	male
CSo58	Rear_axle_cmpt.	561690	male	L40	Parcelrack	560898	male
CSo58	Rear_axle_cmpt.	561566	female	L41	Parcelrack	560898	male
CSw102	Rear_vehicule	562549	male	L42	Parcelrack	560898	male
CSw102	Rear_vehicule	562550	female	L43	Parcelrack	560898	male
CSX1	Engine_Cmpt	563135	male	L44	Parcelrack	560898	male

CONNECTORS LIST

No	Location	Part #	Gender	No	Location	Part #	Gender
L45	Parcelrack	560898	male	L82A	Rearvehicule	562348	female
L46	Parcelrack	560898	male	L83A	Rearvehicule	562348	female
L47	Parcelrack	560898	male	L84	Rear_roof	562486	female
L48	Parcelrack	560898	male	L85	Rear_roof	562486	female
L49	Parcelrack	560898	male	L86	Rear_roof	562486	female
L50	Parcelrack	560898	male	L87	Rear_roof	562486	female
L51	Parcelrack	560898	male	L88	Rear_roof	562486	female
L52	Parcelrack	560898	male	L89	Rear_roof	562486	female
L52	Parcelrack	560900	female	L90	Rear_roof	562486	female
L52A	Parcelrack	560898	male	L93.A	Rear_roof	563069	female
L53	Parcelrack	560898	male	L93.B	Engine_Cmpt.	563069	female
L53	Parcelrack	560900	female	L94.A	Engine_Cmpt.	563069	female
L53A	Parcelrack	560898	male	L94.B	Engine_Cmpt.	563069	female
L54	Parcelrack	560898	male	L95	Outside_Front_LH	562485	male
L54	Parcelrack	560900	female	L95A	Outside_Front_LH	562485	male
L54A	Parcelrack	560898	male	L96	Outside_Front_RH	562485	male
L55	Parcelrack	560898	male	L96A	Outside_Front_RH	562485	male
L55	Parcelrack	560900	female	L97.A	Outside_Front_LH	563069	female
L55A	Parcelrack	560898	male	L97.B	Outside_Front_LH	563069	female
L56	Parcelrack	560898	male	L98.A	Outside_Front_RH	563069	female
L56	Parcelrack	560900	female	L98.B	Outside_Front_RH	563069	female
L56A	Parcelrack	560898	male	L140	Lavatory	561247	male
L57	Parcelrack	560898	male	L141	Upper_front	561247	male
L57	Parcelrack	560900	female	L142	Lavatory	562006	male
L57A	Parcelrack	560898	male	L143	Parcel_rack	561186	male
L58	Parcelrack	560898	male	L144	Parcelrack	561186	male
L58	Parcelrack	560900	female	L145	Parcelrack	561186	male
L58A	Parcelrack	560898	male	L146	Parcelrack	561186	male
L63	Front_Side_LH	562155	male	L147	Parcelrack	561186	male
L64	Outside_Front_RH	562155	male	L148	Parcelrack	561186	male
L64X	Aisle_Section	560898	male	L149	Parcelrack	561186	male
L65	Outside_Front_LH	562155	male	L150	Parcelrack	561186	male
L66	Out_Side_Front_LH	562155	male	L151	Parcelrack	561186	male
L67	4th_Lugg_Cmpt	562155	male	L152	Parcelrack	561186	male
L68	4th_Lugg_Cmpt	562155	male	L153	Parcelrack	561186	male
L69	4th_Lugg_Cmpt	562155	male	L154	Parcelrack	561186	male
L70	4th_Lugg_Cmpt	562155	male	L155	Parcelrack	561186	male
L72	Rear_Vehicle	562155	male	L156	Parcelrack	561186	male
L74	Rear_Vehicle	562155	male	L157	Parcelrack	561186	male
L75	Rearenginedoor	562155	male	L158	Parcelrack	561186	male
L76	Rear_engine_door	562155	male	L173	Parcelrack	563590	female
L81.A	Rear_Vehicle	562835	female	L174A	Parcelrack	563590	female
L81.B	Rear_Vehicle	562834	male	L175	Engine_Cmpt.	563590	female

CONNECTORS LIST

No	Location	Part #	Gender	No	Location	Part #	Gender
L176	5th_Lugg_Cmpt	561247	male	L254	Parcelrack	561186	male
L177	5th_Lugg_Cmpt	561247	male	L255	Parcel_rack	561186	male
L178	3rd_Lugg_Cmpt	561247	male	L256	Parcelrack	561186	male
L179	3rd_Lugg_Cmpt	561247	male	L257	Parcelrack	561186	male
L180	2nd_Lugg_Cmpt	561247	male	L258	Parcel_rack	561186	male
L181	2nd_Lugg_Cmpt	561247	male	L282	Engine_Cmpt	561690	male
L182	1st_Lugg_Cmpt	561247	male	L285.A	Rear_Vehicle	562835	female
L183	1st_Lugg_Cmpt	561247	male	L285.B	Rear_Vehicle	562834	male
L184	Servicecmpt.	561247	male	L286.A	Rear_Vehicle	562835	female
L185.A	Servicecmpt.	561539	male	L286.B	Rear_Vehicle	562834	male
L185.B	Servicecmpt.	561539	male	L290	Engine_door	562565	female
L186.A	Dash	561539	male	L291	Engine_door	562565	female
L186.B	Dash	561539	male	L298A	Enginecmpt.	563590	female
L187	Engine_Cmpt	561690	male	L306	RJBcmpt.	561247	male
L188	Service_Cmpt	562486	female	L309.	Rear_LH_Lugg	564576	male
L193.A	Dash	560488	female	L309D.	Drivers_Area	564576	male
L193.B	Dash	560488	female	L310.	Rear_LH_Lugg	564576	male
L194.A	Dash	562019	female	L310D.	Drivers_Area	564576	male
L194.B	Dash	560488	female	L314	Front_vehicle	562789	male
L195.A	Dash	560488	female	L315	Front_vehicle	562789	male
L195.B	Dash	560488	female	L319	Under_WCL_platform	561247	male
L199	Enginecmpt.	562848	male	L320	Luggage_Cmpt	561247	male
L201	Upper_front	561247	male	L350A.A	Rearaxlecmpt.	564552	male
L202	Upper_front	561247	male	L350A.B	Rearaxlecmpt.	563340	male
L203	RH_Console	561690	male	L350A.C	Rearaxlecmpt.	562251	male
L204	Parcel_Rack_RH	562803	male	L600	Luggage_Cmpt	562155	male
L205	Enginecmpt.	562485	male	L601	Luggage_Cmpt	562155	male
L206	Parcel_Rack_RH	562803	male	L602	Luggage_Cmpt	562155	male
L211	Entrace_Door_step	562486	female	L603	Luggage_Cmpt	562155	male
L212	outside_rear_LH_RH	563589	male	L604	Luggage_Cmpt	562155	male
L213	outside_rear_LH_RH	563589	male	L605	Luggage_Cmpt	562155	male
L214	outside_rear_LH_RH	563589	male	L606	Luggage_Cmpt	562155	male
L243	Parcelrack	561186	male	L607	Luggage_Cmpt	562155	male
L244	Parcelrack	561186	male	L634	Aisle_Section	560898	male
L245	Parcelrack	561186	male	L635	Aisle_Section	560898	male
L246	Parcelrack	561186	male	L650.A	Aisle_Section	560898	male
L247	Parcel_rack	561186	male	L660_1	Rear_Galley	560898	male
L248	Parcelrack	561186	male	L660_2	Rear_Galley	560898	male
L249	Parcelrack	561186	male	L660_3	Rear_Galley	560898	male
L250	Parcel_rack	561186	male	L661.A	Rear_Galley	560081	female
L251	Parcel_rack	561186	male	L661.B	Rear_Galley	560081	female
L252	Parcelrack	561186	male	Mic_Driver_1.A	Parcel_rack	560999	male
L253	Parcel_rack	561186	male	Mic_Driver_2.A	Parcel_rack	560999	male

CONNECTORS LIST

No	Location	Part #	Gender	No	Location	Part #	Gender
Mic_Driver_3.A	Parcel_rack	560999	male	Mo72	Enginecmpt.	568089	male
Mic_Guide_1.A	Parcel_rack	560999	male	Mo73	Enginecmpt.	568089	male
Mic_Guide_2.A	Parcel_rack	560999	male	PC1	FJB	562650	male
Mic_Guide_3.A	Parcel_rack	560999	male	PC1	FJB	562649	female
Mo.10	Parcel_rack	561515	male	PF	FJB	561782	male
Mo.10	Parcel_rack	561552	female	PF	FJB	561781	female
Mo.11	Parcel_rack	561515	male	PF1	Passenger_Area	561782	male
Mo.11	Parcel_rack	561552	female	PF1	Passenger_Area	561781	female
Mo3	Dash	561667	female	PF1A	Passenger_Area	561782	male
Mo4	Dash	564161	male	PF1A	Passenger_Area	561781	female
Mo5	Upper_front	561550	male	Pot2	Dash	561550	male
Mo6	Front_vehicle	561690	male	PR	Parcelrack	561782	male
Mo7	Condcmpt	563691	male	PR	Parcelrack	561781	female
Mo7.	Condcmpt	561890	male	PR1	Passenger_Area	561782	male
Mo8	Condcmpt	563691	male	PR1	Passenger_Area	561781	female
Mo8.	Condcmpt	561890	male	PR1A	Passenger_Area	561782	male
Mo10	Parcel_rack	561515	male	PR1A	Passenger_Area	561781	female
Mo11	Parcel_rack	561515	male	R1	RJB	562486	female
Mo12	Engine_Cmpt	561690	male	R3	RJB	563409	male
Mo13	Engine_Cmpt	561690	female	R4	FJB	564496	male
Mo14	Engine_Cmpt	561566	female	R5	RJB	564496	male
Mo15	Front_Ceiling	560900	female	R12	Evap_Cmpt	563409	male
Mo16	Front_Ceiling	560900	female	R16	RJB	564496	male
Mo17	RH_Console	563626	male	R20	RJB	564496	male
Mo18	Fr_Service_Door	562474	male	R21	FJB	560525	male
Mo19	Fr_Service_Door	562474	male	R23A	FJB	564496	male
Mo20	Fr_Service_Door	562474	male	R26	Evap_Cmpt	564496	male
Mo21	Upper_front	561186	male	R27	Dash	564496	male
Mo22	RH_Console	561186	male	R28	FJB	564496	male
Mo27	Condcmpt	563691	male	R29	RJB	563409	male
Mo27.	Condcmpt	561890	male	R30	FJB	564496	male
Mo28	Condcmpt	563691	male	R31	FJB	564496	male
Mo28.	Condcmpt	561890	male	R34	RJB	564210	male
Mo54	Service_Cmpt	562474	male	R35	RJB	564210	male
Mo61	Parcel_rack	561248	female	R36	Dash	564496	male
Mo62	FrontHatch	562486	female	R37	Dash	564496	male
Mo63	RearHatch	562486	female	R38	FJB	564496	male
Mo65	Enginecmpt.	568089	male	R40	RJB	564496	male
Mo67	Enginecmpt.	568089	male	R47	Parcelrack	564496	male
Mo68	Enginecmpt.	568089	male	R72	5th_Bay	563409	male
Mo69	Enginecmpt.	568089	male	R73	5th_Bay	563409	male
Mo70	Enginecmpt.	568089	male	R210	Parcelrack	560525	male
Mo71	Enginecmpt.	568089	male	R622	Parcelrack	561183	male

CONNECTORS LIST

No	Location	Part #	Gender	No	Location	Part #	Gender
R623		561183	male	Se24	Evap_Cmpt	563758	female
R624		561183	male	Se25	Passenger_Area	561248	female
R_12VISS	Parcel_rack	564496	male	Se28	Pneumatic_plate	561690	male
Res3.A	ParcelRack	563590	female	Se29	Engine_Cmpt	561566	female
Res4	RH_Console	563590	female	Se30	Enginedoor	562877	female
Res6	FJB	563590	female	Se31	Enginedoor	562877	female
Res6A	FJB	563589	male	Se32	Rear_Axle_Cmpt	562426	male
Res6A	FJB	563590	female	Se33	Rear_Axle_Cmpt	562856	male
Res6B	FJB	563589	male	Se34	Rear_Axle_Cmpt	562426	male
Res6B	FJB	563590	female	Se35	Rear_Axle_Cmpt	562426	male
Res7	dash	563590	female	Se36	Rear_Axle_Cmpt	562427	male
Res7A	dash	563589	male	Se37	Front_Axle_LH	641132	female
Res7A	dash	563590	female	Se38	Front_Axle_RH	641132	female
Res7B	dash	563589	male	Se39	Rear_Axle_LH	641132	female
Res7B	dash	563590	female	Se40	Rear_Axle_LH	641132	female
Res15	Engine_Cmpt	561782	male	Se41	Condensor_cmpt.	562877	female
Res31	Ureacmpt.	562350	male	Se45	Servicecmpt.	563409	male
Res32	Ureacmpt.	563764	female	Se46	Rearaxlecmpt.	562348	female
Res46	FJB	563590	female	Se49	Engine_Cmpt	561690	male
Res53	dash	563590	female	Se51	Driverseat	563589	male
Res99	dash	563590	female	Se53	Service_Cmpt	563159	female
Se2	Service_Cmpt	561566	female	Se54	Service_Cmpt	563159	female
Se4	Window_RH	561477	female	Se55	Service_Cmpt	563159	female
Se5	Window_RH	561477	female	Se56	WCLdoor	562479	female
Se6	Window_RH	561477	female	Se57	PneumaticPanel	563159	female
Se7	Window_LH	561477	female	Se60	Service_Cmpt	563409	male
Se8	Window_LH	561477	female	Se63	Rearaxlecmpt.	641132	female
Se9	Window_LH	561477	female	Se64	Rearaxlecmpt.	641132	female
Se10	FJB	561477	female	Se65	Dash	564042	female
Se11.A	Cond_Cmpt	560082	female	Se66	FJB	564039	female
Se11.B	Cond_Cmpt	560082	female	Se67	Frontaxlecmpt.	563159	female
Se11.C	Cond_Cmpt	560082	female	Se69	Frontaxlecmpt.	563159	female
Se13	Engine_Cmpt	562350	male	Se74	Rear_Axle_Cmpt	563340	male
Se14.A	Driver_Area	561782	male	Se79	Front_Axle	563340	male
Se14.B	Driver_Area	561781	female	Se89	EngineCmpt	562350	male
Se15	RH_Console	560898	male	Se94	WCLdoor	562877	female
Se17	Entrace_Door	560081	female	Se100	WCLdoor	562479	female
Se18	Servicecmpt.	561566	female	shell1_633	Driver_Area	561626	female
Se19_P	Service_Cmpt	563677	male	shell1_1618	Driver_Area	562471	male
Se19_S	Service_Cmpt	563677	male	So3	RH_Console	641385	male
Se20	Evap_Cmpt	562426	male	So4	RH_Console	641385	male
Se21	Dash	561248	female	So5	RH_Console	641385	male
Se23	Engine_Cmpt	563159	male	So6	RH_Console	641385	male

CONNECTORS LIST

No	Location	Part #	Gender	No	Location	Part #	Gender
So7	Service_Cmpt	561566	female	spBar27	Rear_axle_cmpt	564135	male
So8	Servicecmpt.	641385	male	Spk1_L	Parcel_Rack_LH	563994	male
So9	Enginecmpt.	560016	female	Spk1_R	Parcel_Rack_RH	563994	male
So10	Cond_Cmpt	562485	male	Spk2_L	Parcel_Rack_LH	563994	male
So11	Cond_Cmpt	561566	female	Spk2_R	Parcel_Rack_RH	563994	male
So13	Evap_Cmpt	563204	female	Spk3_L	Parcel_Rack_LH	563994	male
So14	Servicecmpt.	641385	male	Spk3_R	Parcel_Rack_RH	563994	male
So15	Servicecmpt.	641385	male	Spk4_L	Parcel_Rack_LH	563994	male
So16	Servicecmpt.	641385	male	Spk4_R	Parcel_Rack_RH	563994	male
So17	Servicecmpt.	562848	male	Spk5_L	Parcel_Rack_LH	563994	male
So18	Pneumatic_plate	641385	male	Spk5_R	Parcel_Rack_RH	563994	male
SO18_RH	Pneumatic_plate	641385	male	Spk6_L	Parcel_Rack_LH	563994	male
So19	Pneumatic_plate	641385	male	Spk6_R	Parcel_Rack_RH	563994	male
SO19_RH	Pneumatic_plate	641385	male	Spk7_L	Parcel_Rack_LH	563994	male
So20	Servicecmpt.	641385	male	Spk7_R	Parcel_Rack_RH	563994	male
So21	Front_Axle_Cmpt	564046	female	Spk8_L	Parcel_Rack_LH	563994	male
So22	Front_Axle_Cmpt	564046	female	Spk8_R	Parcel_Rack_RH	563994	male
So23	Rear_Axle_Cmpt	564046	female	Spk9_L	Parcel_Rack_LH	563994	male
So24	Rear_Axle_Cmpt	564046	female	Spk9_R	Parcel_Rack_RH	563994	male
So27	Rearaxlecmpt.	564045	female	Spk10_L	Parcel_Rack_LH	563994	male
So50	Rearaxlecmpt.	564046	female	Spk10_R	Parcel_Rack_RH	563994	male
So52	Rearaxlecmpt.	564045	female	Spk11_L	Parcel_Rack_LH	563994	male
So54	Enginecmpt.	564045	female	Spk11_R	Parcel_Rack_RH	563994	male
So60	Enginecmpt.	562848	male	Spk12_L	Parcel_Rack_LH	563994	male
SO60.	Enginecmpt.	562848	male	Spk12_R	Parcel_Rack_RH	563994	male
So70	Enginecmpt.	561566	female	Spk13_L	Parcel_Rack_LH	563994	male
spBar4	Enginecmpt.	564135	male	Spk13_R	Parcel_Rack_RH	563994	male
spBar5	Enginecmpt.	564135	male	Spk14_L	Parcel_Rack_LH	563994	male
spBar6	Enginecmpt.	564135	male	Spk14_R	Parcel_Rack_RH	563994	male
spBar7	Enginecmpt.	564135	male	Spk15_L	Parcel_Rack_LH	563994	male
spBar11	Engine_Cmpt.	564135	male	Spk15_R	Parcel_Rack_RH	563994	male
spBar12	Engine_Cmpt.	564135	male	Spk16_L	Parcel_Rack_LH	563994	male
spBar13	Enginecmpt.	564135	male	Spk16_R	Parcel_Rack_RH	563994	male
spBar14	Enginecmpt.	564135	male	Spk16_R_Lav	Parcel_Rack_RH	563994	male
spBar15	Enginecmpt.	564135	male	SpkDr_L	Parcel_Rack_LH	563994	male
spBar16	Enginecmpt.	564135	male	SpkDr_R	Parcel_Rack_RH	563994	male
spBar19	Condensorcmpt.	564135	male	Sub1.A	Passenger_Area	564004	female
spBar20	Condensorcmpt.	564135	male	Sub2.A	Passenger_Area	564004	female
spBar21	Condensorcmpt.	564135	male	Sw1.C258	Driver_Area	561188	female
spBar22	Enginecmpt.	564135	male	Sw1.C259	Driver_Area	561186	male
spBar23	Enginecmpt.	564135	male	Sw2	Dash	562763	male
spBar24	Enginecmpt.	564135	male	Sw3	Dash	562763	male
spBar26	Rear_axle_cmpt	564135	male	Sw4	Dash	562763	male

CONNECTORS LIST

No	Location	Part #	Gender	No	Location	Part #	Gender
Sw5	Dash	562763	male	Sw51.B	1st_Lugg_Cmpt	562486	female
Sw6	Dash	562763	male	Sw52.A	1st_Lugg_Cmpt	562485	male
Sw10A	LH_Console	562763	male	Sw52.B	1st_Lugg_Cmpt	562486	female
Sw12	Dash	562763	male	Sw55.A	Lavatory	560488	female
Sw14	Dash	562763	male	Sw55.B	Lavatory	560488	female
Sw16	Dash	562763	male	Sw56.A	Lavatory	560488	female
Sw17.A	Dash	562763	male	Sw56.B	Lavatory	560488	female
SW18_RH	dash	562763	male	Sw58	Engine_Cmpt.	563135	male
Sw18A	dash	562763	male	Sw59	Enginecmpt.	563135	male
Sw20	Dash	562763	male	Sw63A	LHConsole	562763	male
Sw21	Dash	562763	male	Sw64.A	Service_Cmpt	560815	female
Sw24	Dash	562763	male	Sw64.B	Service_Cmpt	560815	female
Sw25	Dash	562763	male	Sw70	dash	562763	male
Sw26	Dash	562763	male	Sw82	dash	563135	male
Sw27	Dash	562763	male	Sw83.A	Dash	560082	female
Sw29	Dash	562763	male	Sw83.B	Dash	560815	female
Sw30	RJB	563135	male	Sw83.C	Dash	560082	female
Sw32	Dash	561477	female	Sw83.D	Dash	560815	female
Sw33	Dash	561476	male	Sw85	LH_Console	562749	male
Sw34	Outside_Front_RH	562477	male	Sw95.A	WCLdoor	562615	female
Sw35	dash	562763	male	Sw95.B	WCLdoor	562615	female
Sw38	LH_Console	562763	male	Sw95.C	WCLdoor	562615	female
Sw39.A	RJB	562403	female	Sw96.A	WCL_Door	562615	female
Sw39.B	RJB	562403	female	Sw96.B	WCL_Door	562615	female
Sw40	LH_Console	561690	male	Sw96.C	WCLdoor	562615	female
Sw41	LH_Console	562749	male	Sw97.A	WCLsystem	562615	female
Sw42	Lugg_Cmpt	561636	female	Sw97.B	WCLsystem	562615	female
Sw43	LH_Console	561690	male	Sw97.C	WCLsystem	562615	female
Sw44.A	FJB	562403	female	Sw98.A	WCLsystem	562615	female
Sw44.B	FJB	562403	female	Sw98.B	WCLsystem	562615	female
Sw45.A	5th_Lugg_Cmpt	562485	male	Sw98.C	WCLsystem	562615	female
Sw45.B	5th_Lugg_Cmpt	562486	female	Sw100	dash	562763	male
Sw46.A	5th_Lugg_Cmpt	562485	male	Sw107	dash	562763	male
Sw46.B	5th_Lugg_Cmpt	562486	female	Sw108	dash	562763	male
Sw47.A	3rd_Lugg_Cmpt	562485	male	Sw122	dash	562763	male
Sw47.B	3rd_Lugg_Cmpt	562486	female	Sw124	dash	562763	male
Sw48.A	3rd_Lugg_Cmpt	562485	male	Sw125.A	dash	561457	female
Sw48.B	3rd_Lugg_Cmpt	562486	female	Sw125.B	dash	561457	female
Sw49.A	2nd_Lugg_Cmpt	562485	male	Sw126	dash	562763	male
Sw49.B	2nd_Lugg_Cmpt	562486	female	Sw137	Dash	562763	male
Sw50.A	2nd_Lugg_Cmpt	562485	male	Sw149	Dash	562763	male
Sw50.B	2nd_Lugg_Cmpt	562486	female	Sw156	LH_Console	562763	male
Sw51.A	1st_Lugg_Cmpt	562485	male	Sw157	Dash	562763	male

CONNECTORS LIST

No	Location	Part #	Gender	No	Location	Part #	Gender
Sw158	Dash	562763	male				
Sw161	Dash	562763	male	VECR12	RJB	563187	male
Sw162	Dash	562763	male	VECT3	Rear_vehicule	563718	male
Sw164	Dash	562763	male	VECT4	Rear_vehicule	563714	male
Sw221	Dash	562763	male	Y80	Engine_Cmpt	563789	male
Sw619	Dash	562763	male	Y81	Cond_Cmpt	563793	male
Sw629	Dash	562763	male				
Sw660	Rear_Galley	562763	male				
Sw661	Rear_Galley	562763	male				
Sw663	Rear_Galley	562763	male				
Sw670	dash	562763	male				
tab69	Parcelrack	561626	N/A				
Tab70a	Parcelrack	561626	N/A				
Tab70b	Parcelrack	561626	N/A				
tab71a	Parcelrack	561626	N/A				
Tab600		561904	N/A				
Tab601		561108	N/A				
Tab602		561108	N/A				
Tab603		561108	N/A				
Tab604		561108	N/A				
TermA43J1_21		564629	N/A				
TermA43J2_13		564629	N/A				
TermA52J1_6		564629	N/A				
TermA52J1_16		564629	N/A				
TermL150	Parcel_rack	562505	N/A				
TermL248	Parcel_rack	562505	N/A				
Tstat_26.A	FJB	560079	N/A				
VECF1	FJB	563186	male				
VECF2	FJB	563183	male				
VECF3	FJB	563185	male				
VECF4	FJB	563182	male				
VECF9	FJB	563448	male				
VECF10	FJB	563181	male				
VECF11	FJB	563184	male				
VECF12	FJB	563187	male				
VECR1	RJB	563186	male				
VECR2	RJB	563183	male				
VECR3	RJB	563185	male				
VECR4	RJB	563182	male				
VECR4.	RJB	563182	male				
VECR9	RJB	563448	male				
VECR10	RJB	563181	male				
VECR11	RJB	563184	male				

CONNECTORS LIST

No	Location	Part #	Gender	No	Location	Part #	Gender
24SS_OP	Parcel_Rack_LH	563071	male	A34.L	Enginecmpt.	564269	male
24SS_OP	Parcel_Rack_LH	563040	female	A36.JA	FJB	562767	male
24SS_OP_2	Parcel_Rack_LH	563071	male	A36.JB	FJB	562765	male
24SS_OP_2	Parcel_Rack_LH	563040	female	A36.JC	FJB	562957	male
120V_inlet	Rearvehicule	561572	male	A39.P101	Parcel_Rack_LH	563201	male
A1	RJB	563975	male	A39.P901	Parcel_Rack_LH	563953	male
A2	FJB	563984	male	A40	Dash	563884	male
A3	Dash	562363	male	A41.J1	FJB	563679	male
A4.A	Service_Cmpt	562428	female	A41.J2	FJB	564037	male
A4.B	Service_Cmpt	561188	female	A41.J3	FJB	564004	male
A5	Service_Cmpt	562428	female	A60.A	Parcel_Rack_LH	563071	male
A6	Engine_Cmpt	562427	male	A60.B	Parcel_Rack_LH	562706	female
A7	Rear_Axle_Cmpt	563979	male	A60.C	Parcel_Rack_LH	901110	male
A9.Cx1	FJB	564041	female	A60.D	Parcel_Rack_LH	901110	male
A9.Cx2	FJB	563678	male	A60.E	Parcel_Rack_LH	560799	female
A9.Cx3	FJB	564037	female	A61.A	Parcel_Rack_LH	562464	male
A9.Cx4	FJB	564038	female	A61.B	Parcel_Rack_LH	562465	male
A10.X1	Engine_Cmpt	563135	male	A65..A	ParcelRack	563025	male
A10.X3	Engine_Cmpt	563134	female	A65..E	ParcelRack	563071	male
A11	LH_Console	563142	male	A65..G1	ParcelRack	563071	male
A14.A	Dash	562766	male	A65..G2	ParcelRack	563071	male
A14.B	Dash	562767	male	A65..G3	ParcelRack	563071	male
A14.C	Dash	562765	male	A65..H1	ParcelRack	561716	female
A15	Dash	562464	male	A65..H2	ParcelRack	561716	female
A17.D	RJB	561932	male	A65..H3	ParcelRack	561716	female
A18.J1	FJB	562794	male	A65..J	ParcelRack	562465	male
A18.J2	FJB	562650	male	A69L.A	Parcel_Rack_LH	563025	male
A19	LH_Console	562878	female	A69L.B1	Parcel_Rack_LH	bidon	male
A20	Parcel_Rack_LH	561477	female	A69L.B2	Parcel_Rack_LH	bidon	male
A24.A	RHConsol	561890	male	A69L.B3	Parcel_Rack_LH	bidon	male
A24.B	RHConsol	561566	female	A69L.B4	Parcel_Rack_LH	bidon	male
A25	Parcel_Rack_LH	563025	male	A69L.C	Parcel_Rack_LH	bidon	male
A26.P1	Enginecmpt.	562350	male	A69R.A	Parcel_Rack_LH	563025	male
A26.P2	Enginecmpt.	563322	female	A69R.B1	Parcel_Rack_LH	bidon	male
A26.P4	Enginecmpt.	568088	male	A69R.B2	Parcel_Rack_LH	bidon	male
A27	Service_Cmpt	562929	male	A69R.B3	Parcel_Rack_LH	bidon	male
A28	Service_Cmpt	562928	male	A69R.B4	Parcel_Rack_LH	bidon	male
A29.	Dash	562464	male	A69R.C	Parcel_Rack_LH	bidon	male
A29.	Dash	565871	female	A70a	ParcelRack	561540	female
A33.A	Parcel_Rack_LH	563071	male	A70b	ParcelRack	561540	female
A33.B	Parcel_Rack_LH	562330	female	A77	Parcelrack	564547	male
A34.J	Enginecmpt.	568118	male	A78	Parcelrack	562583	female
A34.K	Enginecmpt.	564270	male	A79	Parcelrack	562583	female

CONNECTORS LIST

No	Location	Part #	Gender	No	Location	Part #	Gender
A80	Parcelrack	562479	female	A122.A	ParcelRack	563960	male
A81.CN1	FJB	562767	male	A122.B	ParcelRack	563962	male
A81.CN3A	FJB	564741	male	A122.C1	ParcelRack	563956	male
A81.CN3B	FJB	564742	male	A122.C2	ParcelRack	563957	male
A83.A	FJB	565970	female	A122.C3	ParcelRack	563958	male
A95.A	Parcelrack	564489	female	A123.A	ParcelRack	563960	male
A95.B	Parcelrack	562706	female	A123.B	ParcelRack	563962	male
A95.C	Parcelrack	562706	female	A123.C1	ParcelRack	563956	male
A96.A	FJB	564205	male	A123.C2	ParcelRack	563957	male
A97	Dash	563226	male	A123.C3	ParcelRack	563958	male
A97A	FJB	563226	male	A124.A	ParcelRack	563960	male
A97A	FJB	563613	female	A124.B	ParcelRack	563962	male
A97B	FJB	563226	male	A124.C1	ParcelRack	563956	male
A97B	FJB	563613	female	A124.C2	ParcelRack	563957	male
A97S.A1	Dash	564401	male	A124.C3	ParcelRack	563958	male
A97S.A2	Dash	564402	male	A130	Driver_Area	563226	male
A97S.A3	Dash	564403	male	A131.A	Engine_Cmpt	561782	male
A99	FJB	564205	male	A131.B	Engine_Cmpt	561781	female
A100	AxleCompt	563632	male	A137A	Condensercmpt.	20429843	male
A101	AxleCompt	563632	male	A138	Cond_Cmpt	563787	male
A102	AxleCompt	563632	male	A139	Dash	564501	male
A103	Dash	562070	female	A150	Parcelrack	21280133	male
A107	EngineCmpt.	560336	male	A152.A	Parcelrack	561550	male
A108	RJB	562766	male	A152.B	Parcelrack	563071	male
A109A	FJB	564141	male	A152.C	Parcelrack	563071	male
A111	RJB	562550	female	A152.D	Parcelrack	563071	male
A113.A	Parcel_Rack_LH	563960	male	A152.E	Parcelrack	563071	male
A113.B	Parcel_Rack_LH	563962	male	A152.F	Parcelrack	563071	male
A113.C1	Parcel_Rack_LH	563956	male	A152.G	Parcelrack	563071	male
A113.C2	Parcel_Rack_LH	563957	male	A152.H	Parcelrack	563071	male
A113.C3	Parcel_Rack_LH	563958	male	A152.I	Parcelrack	563071	male
A114A	Dash	564252	male	A152.J	Parcelrack	563071	male
A116	Dash	563872	female	A152.K	Parcelrack	562779	male
A120.A	Dashboard	563960	male	A152.L	Parcelrack	562779	male
A120.B	Dashboard	563962	male	A162.	FrontCab	561637	male
A120.C1	Dashboard	563956	male	A162.A	FrontCab	561566	female
A120.C2	Dashboard	563957	male	A162.B	FrontCab	561782	male
A120.C3	Dashboard	563958	male	A164.A	RH_trapezoidal_window	561566	female
A121.USB	Dash	563878	male	A164.B	RH_trapezoidal_window	561782	male
A121.Vsa	Dash	563679	male	A165	DriverArea	560641	male
A121.Vsb	Dash	563678	male	A166	RearCab	561637	male
A121.Vsc	Dash	564037	male	A222M..A	DriverArea	563040	female
A121.Vsd	Dash	564118	male	A222M..B	DriverArea	565871	female

CONNECTORS LIST

No	Location	Part #	Gender	No	Location	Part #	Gender
A222M..C	DriverArea	564537	female	AE43.J3	FJB	565957	male
A222M.A	DriverArea	563040	female	AE44.J1	FJB	563679	male
A222M.B	DriverArea	565871	female	AE44.J2	FJB	564037	female
A222M.C	DriverArea	564537	female	AE44.J3	FJB	565957	male
A222W..A	OutsideFrontLH	563409	male	AE45.J1	FJB	563679	male
A222W..B	OutsideFrontLH	563409	male	AE45.J2	FJB	564037	female
A222W.A	OutsideFrontLH	563409	male	AE45.J3	FJB	565957	male
A222W.B	OutsideFrontLH	563409	male	AE46.J1	FJB	563679	male
A223M..A	INsideFrontRH	563040	female	AE46.J2	FJB	564037	female
A223M..B	INsideFrontRH	565871	female	AE46.J3	FJB	565957	male
A223M..C	INsideFrontRH	564537	female	AE47.J1	RH_console	563679	male
A223M.A	INsideFrontRH	563040	female	AE47.J2	RH_console	564037	female
A223M.B	INsideFrontRH	565871	female	AE47.J3	RH_console	565957	male
A223M.C	INsideFrontRH	564537	female	AE48.J1	RH_console	563679	male
A223W..A	OutsideFrontRH	563409	male	AE48.J2	RH_console	564037	female
A223W..B	OutsideFrontRH	563409	male	AE48.J3	RH_console	565957	male
A223W.A	OutsideFrontRH	563409	male	AE49..J1	RJB	563679	male
A223W.B	OutsideFrontRH	563409	male	AE49..J2	RJB	564037	male
A309.A	Lugg	564576	male	AE49..J3	RJB	565957	male
A309.B	Lugg	564576	male	AE49.J1	RJB	563679	male
A309.C	Lugg	561566	female	AE49.J2	RJB	564037	male
A310.A	Lugg	564576	male	AE49.J3	RJB	565957	male
A310.B	Lugg	564576	male	AE50..J1	RJB	563679	male
A310.C	Lugg	561566	female	AE50..J2	RJB	564037	male
A614.A	Parcelrack	561550	male	AE50..J3	RJB	565957	male
A614.C1	Parcelrack	563071	male	AE50.J1	RJB	563679	male
A614.C2	Parcelrack	563071	male	AE50.J2	RJB	564037	male
A614.C3	Parcelrack	563071	male	AE50.J3	RJB	565957	male
A614.C4	Parcelrack	563071	male	AE51.J1	RJB	563679	male
A614.C5	Parcelrack	563071	male	AE51.J2	RJB	564037	female
A614.C6	Parcelrack	563071	male	AE51.J3	RJB	565957	male
A614.I/O	ParcelRack	bidon	male	AE52..J1	RJB	563679	male
A614.P1	Parcelrack	562783	male	AE52..J2	RJB	564037	male
A614.P2	Parcelrack	562783	male	AE52..J3	RJB	565957	male
A614.P3	Parcelrack	562783	male	AE52.J1	RJB	563679	male
AE41.J1	FJB	563679	male	AE52.J2	RJB	564037	female
AE41.J2	FJB	564037	female	AE52.J3	RJB	565957	male
AE41.J3	FJB	564004	male	AE53.J1	LH_ParcelRack	563679	male
AE42.J1	FJB	563679	male	AE53.J2	LH_ParcelRack	564037	female
AE42.J2	FJB	564037	female	AE53.J3	LH_ParcelRack	565957	male
AE42.J3	FJB	564004	male	AE54.J1	Evaporatorcmpt.	563679	male
AE43.J1	FJB	563679	male	AE54.J2	Evaporatorcmpt.	564037	female
AE43.J2	FJB	564037	male	AE54.J3	Evaporatorcmpt.	565957	male

CONNECTORS LIST

No	Location	Part #	Gender	No	Location	Part #	Gender
AE55.J1	Dash	563679	male	C3S	RJB	563593	male
AE55.J2	Dash	564037	female	C3S	RJB	563590	female
AE55.J3	Dash	564004	male	C4	FJB	563580	male
AE56.J1	Dash	563679	male	C4	FJB	563581	female
AE56.J2	Dash	564037	male	C5	FJB	563589	male
AE56.J3	Dash	564004	male	C5	FJB	563590	female
AE57.J1	WCLcmpt.	563679	male	C5S	FJB	563589	male
AE57.J2	WCLcmpt.	564037	male	C5S	FJB	563590	female
AE57.J3	WCLcmpt.	564004	male	C6	FJB	563582	male
AltLL.A	Enginecmpt.	563746	female	C6	FJB	563583	female
AltLL.B	Enginecmpt.	560815	female	C7	Service_Cmpt	562581	male
AltLL.C	Enginecmpt.	564469	female	C7	Service_Cmpt	562583	female
AltLR.A	enginecmpt.	563746	female	C8	FJB	563227	male
AltLR.B	Enginecmpt.	560815	female	C8	FJB	563614	female
AltLR.C	Enginecmpt.	564469	female	C9	RJB	561986	male
AltUR.A	Enginecmpt.	563746	female	C9	RJB	561987	female
AltUR.B	Enginecmpt.	560815	female	C10	Engine_Cmpt	562581	male
AltUR.C	Enginecmpt.	564469	female	C10	Engine_Cmpt	562583	female
B85	Engine_Cmpt	563815	male	C11	Service_Cmpt	563580	male
B96	Engine_Cmpt	563821	male	C11	Service_Cmpt	563581	female
B96B	Engine_Cmpt	563823	male	C12	Engine_Cmpt	562581	male
B97	Engine_Cmpt	563816	male	C12	Engine_Cmpt	562583	female
B98	Engine_Cmpt	563817	male	C13_plug	RH_Console	563589	male
B99	Engine_Cmpt	563815	male	C13_socket	RH_Console	563590	female
B115A	Enginecmpt.	564226	male	C13S	RH_Console	563589	male
B142C	Condensercmpt.	563515	male	C13S	RH_Console	563590	female
B310	Enginecmpt.	565967	male	C15A	EvaporatorCmpt	568110	male
C1	FJB	563589	male	C15A	EvaporatorCmpt	568109	female
C1	FJB	563590	female	C16	RJB	561577	male
C1S	FJB	563589	male	C16	RJB	561605	female
C1S	FJB	563590	female	C17	RJB	560195	male
C2	Service_Cmpt	563580	male	C17	RJB	560169	female
C2	Service_Cmpt	563581	female	C18	FJB	561986	male
C2A	FJB	563580	male	C18	FJB	561987	female
C2A	FJB	563581	female	C19	RJB	561986	male
C2B	FJB	564034	male	C19	RJB	561987	female
C2B	FJB	564035	female	C20A	Evap_Cmpt	562485	male
C3_plug	RJB	563589	male	C20A	Evap_Cmpt	562486	female
C3_socket	RJB	563590	female	C20B	Evap_Cmpt	562485	male
C3AP	FJB	563589	male	C20B	Evap_Cmpt	562486	female
C3AP	FJB	563590	female	C23	Evaporatorcmpt.	564034	male
C3AS	FJB	563589	male	C23	Evaporatorcmpt.	564035	female
C3AS	FJB	563590	female	C24_plug	Evap_Cmpt	561690	male

CONNECTORS LIST

No	Location	Part #	Gender	No	Location	Part #	Gender
C24_socket	Evap_Cmpt	561566	female	C47	FJB	565207	male
C25	Parcel_Rack_LH	561550	male	C48	RJB	565208	male
C25	Parcel_Rack_LH	561667	female	C49	FJB	562005	male
C26	Ureacmpt.	563226	male	C49	FJB	561714	female
C26	Ureacmpt.	563613	female	C50	RJB	563933	male
C26A	Ureacmpt	568110	male	C50	RJB	563932	female
C26A	Ureacmpt	568109	female	C54	Engine_Cmpt.	563226	male
C26B	Ureacmpt.	563227	male	C54	Engine_Cmpt.	563613	female
C26B	Ureacmpt.	563614	female	C54A	Ureacmpt	568110	male
C29	4rd_Lugg_Cmpt	563651	male	C54A	Ureacmpt	568109	female
C29	3rd_Lugg_Cmpt	563652	female	C54B	Engine_Cmpt.	562477	male
C30	3rd_Lugg_Cmpt	561710	male	C54B	Engine_Cmpt.	562479	female
C30	3rd_Lugg_Cmpt	561709	female	C55	Evap_Cmpt	561577	male
C31W	Parcelrack	563227	male	C55	Evap_Cmpt	561605	female
C31W	Parcelrack	563614	female	C59	RJB	561643	male
C32	lavatory	561734	male	C59	RJB	561642	female
C32	Lavatory	561735	female	C63	Entrace_Door	562581	male
C32W	WCLcmpt.	561669	male	C63	Entrace_Door	562583	female
C32W	WCLcmpt.	561670	female	C64	Engine_Cmpt	568110	male
C33	WCLcmpt.	564034	male	C64	Engine_Cmpt	568109	female
C33	WCLcmpt.	564035	female	C64X	Aisle_section	560898	male
C34	RH_Console	561986	male	C64X	Aisle_section	560900	female
C34	RH_Console	561987	female	C66_plug	Evap_Cmpt	561577	male
C36	FJB	561986	male	C66_socket	Evap_Cmpt	561605	female
C36	FJB	561987	female	C67	Parcelrack	561734	male
C37.	Parcel_Rack_LH	561734	male	C67	Parcelrack	561735	female
C37.	Parcel_Rack_LH	561735	female	C69_plug	FJB	561690	male
C38.	Parcelrack	561734	male	C69_socket	FJB	561566	female
C38.	Parcelrack	561735	female	C70	FJB	562557	male
C39	Parcelrack	562503	male	C70	FJB	562558	female
C39	Parcelrack	562507	female	C71	FJB	561646	male
C39A	Firesuppressioncmpt.	561782	male	C71	FJB	561645	female
C39A	Firesuppressioncmpt.	561781	female	C72	FJB	561646	male
C40	Dash	562485	male	C72	FJB	561645	female
C40	Dash	562486	female	C74	FJB	561645	female
C41	RJB	561782	male	C74	FJB	561646	male
C41	RJB	561781	female	C87	Engine_Cmpt	562485	male
C44_plug	FJB	561577	male	C87	Engine_Cmpt	562486	female
C44_socket	FJB	561605	female	C88	WCL_Cmpt.	563226	male
C45	FJB	561643	male	C88	WCL_Cmpt.	563613	female
C45	FJB	561642	female	C90	RJB	563582	male
C46	3rdlugg.cmpt.	562549	male	C90	RJB	563583	female
C46	3rdlugg.cmpt.	562550	female	C91	RJB	562285	male

CONNECTORS LIST

No	Location	Part #	Gender	No	Location	Part #	Gender
C91	RJB	562282	female	C152	Cond_Cmpt	561611	male
C94_plug	FJB	563589	male	C152	Cond_Cmpt	561610	female
C94_socket	FJB	563590	female	C157_plug	FJB	561637	male
C96	FJB	561646	male	C157_socket	FJB	561636	female
C96	FJB	561645	female	C159	ParcelRack	561577	male
C97	FJB	561643	male	C159	ParcelRack	561605	female
C97	FJB	561642	female	C159_LH_plug	ParcelRack	561247	male
C99	Enginecmpt.	562581	male	C159_LH_socket	ParcelRack	561248	female
C99	Enginecmpt.	562583	female	C162	FrontCab	561690	male
C100	Evaporatorcmpt.	562477	male	C162	FrontCab	561566	female
C100	Evaporatorcmpt.	562479	female	C164A	RH_Trapezoidal_Window	561690	male
C100S	Evaporator_Cmpt.	562477	male	C164A	RH_Trapezoidal_Window	561566	female
C100S	Evaporator_Cmpt.	562479	female	C164AA	RH_Trapezoidal_Window	561690	male
C101	Service_Cmpt	561690	male	C164AA	RH_Trapezoidal_Window	561566	female
C101	Service_Cmpt	561566	female	C164B	RH_Trapezoidal_Window	561782	male
C103_plug	FJB	562485	male	C164B	RH_Trapezoidal_Window	561781	female
C103_socket	FJB	562486	female	C164BB	RH_Trapezoidal_Window	561782	male
C105_plug	FJB	562581	male	C164BB	RH_Trapezoidal_Window	561781	female
C105_socket	FJB	562583	female	C166	RrParcelRack	561637	male
C106_plug	FJB	562581	male	C166	RrParcelRack	561636	female
C106_socket	FJB	562583	female	C167	FJB	561577	male
C107A	Enginecmpt.	562885	female	C167	FJB	561605	female
C107A	Enginecmpt.	562884	female	C167.	FJB	561577	male
C107B	Enginecmpt.	562885	female	C167.	FJB	561605	female
C107B	Enginecmpt.	562884	female	C170	LH_Console	561637	male
C107C	Enginecmpt.	562885	female	C170	LH_Console	561636	female
C107C	Enginecmpt.	562884	female	C171	LH_Console	561646	male
C108	Dash	562557	male	C171	LH_Console	561645	female
C108	dash	562558	female	C175	RJB	563226	male
C110	Dash	568110	male	C175	RJB	563613	female
C110	Dash	568109	female	C175.	RJB	563226	male
C119A	Rear_engine_door	568110	male	C175.	RJB	563613	female
C119A	Rear_engine_door	568109	female	C187	RJB	561577	male
C124	DashBoard	562503	male	C187	RJB	561605	female
C124	DashBoard	562507	female	C188	Evap_Cmpt	561577	male
C129	Dash	563858	male	C188	Evap_Cmpt	561605	female
C129	Dash	563859	female	C189	RJB	561986	male
C131A	Engine_Cmpt	561782	male	C189	RJB	561987	female
C131A	Engine_Cmpt	561781	female	C193_plug	RJB	563589	male
C131B	Engine_Cmpt	561782	male	C193_socket	RJB	563590	female
C131B	Engine_Cmpt	561781	female	C194	FJB	563589	male
C144	RJB	560852	male	C194	FJB	563590	female
C144	RJB	560851	female	C195	dash	563347	male

CONNECTORS LIST

No	Location	Part #	Gender	No	Location	Part #	Gender
C195	dash	560489	female	C298	P.Rack	561611	male
C195A	dash	563347	male	C298	P.Rack	561610	female
C195A	dash	560489	female	C333	Upper_front	561550	male
C195B	dash	563347	male	C333	Upper_front	561667	female
C195B	dash	560489	female	C355	RJB	563582	male
C195C	dash	564222	male	C355	RJB	565887	female
C195C	dash	564224	female	C356	Parcelrack	561710	male
C206	Parcel_Rack_RH	562503	male	C356	Parcelrack	561709	female
C206	Parcel_Rack_RH	562507	female	C357	Parcelrack	561847	male
C207	Parcel_Rack_LH	562503	male	C357	Parcelrack	561862	female
C207	Parcel_Rack_LH	562507	female	C380A	Dash	564222	male
C213	Parcel_Rack_LH	561515	male	C380A	Dash	564224	female
C213	Parcel_Rack_LH	561552	female	C381	Parcel_Rack	561847	male
C222	FJB	562477	male	C381	Parcel_Rack	561862	female
C222	FJB	562479	female	C382	Under_Seat	561580	male
C223	FJB	563227	male	C382	Under_Seat	561582	female
C223	FJB	563614	female	C382.B_plug	Under_Seat	561637	male
C224	FJB	561637	male	C382.B_socket	Under_Seat	561636	female
C224	FJB	561636	female	C383_plug	RrSeatLH	562464	male
C225	FJB	562650	male	C383_socket	RrSeatLH	565871	female
C225	FJB	562649	female	C397	RJB	562285	male
C226	FJB	562650	male	C397	RJB	562282	female
C226	FJB	562649	female	C397.	RJB	562285	male
C226a_plug	FJB	562650	male	C397.	RJB	562282	female
C226a_socket	FJB	562649	female	C430	LH_Console	562363	male
C279	Service_Cmpt	562477	male	C430	LH_Console	561188	female
C279	Service_Cmpt	562479	female	C430.	LH_Console	562363	male
C279A	Service_Cmpt	562477	male	C430.	LH_Console	561188	female
C279A	Service_Cmpt	562479	female	C430..	LH_Console	562363	male
C284	Parcel_Rack	561782	male	C430..	LH_Console	561188	female
C284	Parcel_Rack	561781	female	C452	Dash	561986	male
C284_1	Parcel_Rack	561782	male	C452	Dash	561987	female
C284_1	Parcel_Rack	561781	female	C463	Rearaxlecmpt	568112	male
C284_2	Parcel_Rack	561782	male	C463	Rearaxlecmpt	568111	female
C284_2	Parcel_Rack	561781	female	C464	FJB	564222	male
C284_3	Parcel_Rack	561782	male	C464	FJB	564224	female
C284_3	Parcel_Rack	561781	female	C464A	Dash	564222	male
C284_4	Parcel_Rack	561782	male	C464A	Dash	564224	female
C284_4	Parcel_Rack	561781	female	C464B	FJB	564222	male
C284_5	Parcel_Rack	561782	male	C464B	FJB	564224	female
C284_5	Parcel_Rack	561781	female	C465	Parcelrack	562581	male
C284_6	Parcel_Rack	561782	male	C465	Parcelrack	562583	female
C284_6	Parcel_Rack	561781	female	C506	FJB	561687	male

CONNECTORS LIST

No	Location	Part #	Gender	No	Location	Part #	Gender
C506	FJB	561685	female	C600.Spare_plug	Dash	563226	male
C540	ParcelRack	562477	male	C600.Spare_socket	Dash	563613	female
C540	ParcelRack	562479	female	C600A	Dash	563226	male
C540._plug	ParcelRack	562477	male	C600A	Dash	563613	female
C540._socket	ParcelRack	562479	female	C600B	Dash	563226	male
C541	ParcelRack	563226	male	C600B	Dash	563613	female
C541	ParcelRack	563613	female	C601	LHRoofWinAjar	561476	male
C542	Parcelrack	561550	male	C601	LHRoofWinAjar	561477	female
C542	Parcelrack	561667	female	C602	RH_Roof_Win_Ajar	561476	male
C543	ParcelRack	561607	male	C602	RH_Roof_Win_Ajar	561477	female
C543	ParcelRack	561606	female	C602A	RH_Roof_Win_Ajar	561668	male
C545	ParcelRack	561550	male	C602A	RH_Roof_Win_Ajar	561551	female
C545	ParcelRack	561667	female	C603	RHRoofWinAjar	561476	male
C558	Parcelrack	562503	male	C603	RHRoofWinAjar	561477	female
C558	Parcelrack	562507	female	C603.	Parcelrack	561669	male
C564	Parcelrack	562503	male	C603.	Parcelrack	561670	female
C564	Parcelrack	562507	female	C606	Lugg._Cmpt	561577	male
C564_Sp	Parcelrack	562503	male	C606	Lugg._Cmpt	561605	female
C564_Sp	Parcelrack	562507	female	C612_plug	PRack	561687	male
C566	Parcelrack	562503	male	C612_socket	PRack	561685	female
C566	Parcelrack	562507	female	C614	Passenger_Area	563071	male
C567	Parcelrack	562503	male	C614	Passenger_Area	563040	female
C567	Parcelrack	562507	female	C615	Passenger_Area	563071	male
C574	Parcel_Rack_RH	562549	male	C615	Passenger_Area	563040	female
C574	Parcel_Rack_RH	562550	female	C617	Mirror_LH	563801	male
C575	Parcel_Rack_RH	562503	male	C617	Mirror_LH	563800	female
C575	Parcel_Rack_RH	562507	female	C618	Mirror_RH	563801	male
C576B	Parcel_Rack_RH	562006	male	C618	Mirror_RH	563800	female
C576B	Parcel_Rack_RH	560908	female	C619_plug	Dash	562485	male
C576BB	Parcelrack	562006	male	C619_socket	PRack	562486	female
C576BB	Parcelrack	560908	female	C621	Aisle_section	560898	male
C577A	Parcel_Rack	562006	male	C621	Aisle_section	560900	female
C577A	Parcel_Rack	560908	female	C624_plug	Rear_Galley	561690	male
C577AA	Parcelrack	562006	male	C624_socket	Rear_Galley	561566	female
C577AA	Parcelrack	560908	female	C626	FJB	562485	male
C578	Parcel_Rack_LH	562503	male	C626	FJB	562486	female
C578	Parcel_Rack_LH	562507	female	C629	DashBoard	561690	male
C579	Parcel_Rack_LH	562549	male	C629	DashBoard	561566	female
C579	Parcel_Rack_LH	562550	female	C630	Parcel_Rack	561690	male
C582	FJB	561690	female	C630	Parcel_Rack	561566	female
C582	FJB	561566	female	C633	Aisle_section	560898	male
C600	Dash	563226	male	C633	Aisle_section	560900	female
C600	Dash	563613	female	C633A	Aisle_section	560898	male

CONNECTORS LIST

No	Location	Part #	Gender	No	Location	Part #	Gender
C633A	Aisle_section	560900	female	C_ALT	Enginecmpt.	562583	female
C633B	Aisle_section	560898	male	C_ALT3	Enginecmpt.	562477	male
C633B	Aisle_section	560900	female	C_ALT3	Enginecmpt.	562479	female
C634	Aisle_section	560898	male	C_AUDIO_AUX	Parcel_Rack	562557	male
C634	Aisle_section	560900	female	C_AUDIO_AUX	Parcel_Rack	562558	female
C634A	Aisle_section	560898	male	C_AUDIO_AUX.	Parcel_Rack	562557	male
C634A	Aisle_section	560900	female	C_AUDIO_AUX.	Parcel_Rack	562558	female
C636	Aisle_section	560898	male	C_AUDIO_AUX_LH	Parcel_Rack	562557	male
C636	Aisle_section	560900	female	C_AUDIO_AUX_LH	Parcel_Rack	562558	female
C645	Aisle_section	560898	male	C_AUDIO_AUX_RH	Parcel_Rack	562557	male
C645	Aisle_section	560900	female	C_AUDIO_AUX_RH	Parcel_Rack	562558	female
C660	Rear_Galley	562646	male	C_Audio_HDMI_L	Parcel_Rack	901062	male
C660	Rear_Galley	562647	female	C_Audio_HDMI_L	Parcel_Rack	901283	female
C662	FJB	562477	male	C_Audio_HDMI_R	Parcel_Rack	901062	male
C662	FJB	562479	female	C_Audio_HDMI_R	Parcel_Rack	901283	female
C662._plug	FJB	562477	male	C_AUX	Parcelrack	563071	male
C662._socket	FJB	562479	female	C_AUX	Parcelrack	563040	female
C700	FJB	561637	male	C_AUX_2	Parcelrack	563071	male
C700	FJB	561636	female	C_AUX_2	Parcelrack	563040	female
C700:2	FJB	561637	male	C_INV1	Parcelrack	562337	male
C700:7	FJB	561636	female	C_INV1	Parcelrack	562338	male
C710	Front_LH_ParcelRack	561637	male	C_INV2	Parcelrack	562337	male
C710	Front_LH_ParcelRack	561636	female	C_INV2	Parcelrack	562338	male
C752_plug	Parcel_Rack	901062	male	C_LineOut	Parcelrack	563962	male
C752_socket	Parcel_Rack	901283	female	C_LineOut	Parcelrack	564489	female
C753_plug	Parcel_Rack	901062	male	C_Mo9	Evap_Cmpt	561577	male
C753_socket	Parcel_Rack	901283	female	C_Mo9	Evap_Cmpt	561605	female
C766	Parcelrack	561662	male	C_Mo9:2	Evap_Cmpt	561577	male
C766	Parcelrack	561661	female	C_Mo9:2	Evap_Cmpt	561605	female
C768	Parcel_Rack	901062	male	C_Se51	dash	563589	male
C768	Parcel_Rack	901283	female	C_Se51	dash	563590	female
C769	Parcel_Rack	901062	male	C_USB	Parcel_Rack	562069	male
C769	Parcel_Rack	901283	female	C_USB	Parcel_Rack	562070	female
C777	Dash	562477	male	CCAN1	FJB	562650	male
C777	Dash	562479	female	CCAN1	FJB	562649	female
C_159RH_plug	Dash	561247	male	CCAN2	FJB	562650	male
C_159RH_socket	Dash	561248	female	CCAN2	FJB	562649	female
C_A60DB	Parcel_Rack	563071	male	CCAN3	FJB	562650	male
C_A60DB	Parcel_Rack	563040	female	CCAN3	FJB	562649	female
C_A69R	Parcel_Rack	563025	male	CCAN4	FJB	562650	male
C_A97	Dash	563226	male	CCAN4	FJB	562649	female
C_A97	Dash	563613	female	CCust	RJB	562477	male
C_ALT	Enginecmpt.	562581	male	CCust	RJB	562479	female

CONNECTORS LIST

No	Location	Part #	Gender	No	Location	Part #	Gender
CCust.	RJB	562477	male	CSX1	Engine_Cmpt	563134	female
CCust.	RJB	562479	female	CSX3	Engine_Cmpt	563135	male
CFHPR1	Parcelrack	564560	male	CSX3	Engine_Cmpt	563134	female
CIND-1.A	Parcelrack	560908	female	CT_IN	Rear_Vehicle	560167	male
CIND-1.B	Parcelrack	560908	female	CT_IN	Rear_Vehicle	560159	female
CIND-2.A	Parcelrack	560908	female	CT_IN2	Engine_Cmpt	560167	male
CIND-2.B	Parcelrack	560908	female	CT_IN2	Engine_Cmpt	560159	female
CIND-11.A	Parcelrack	560908	female	CT_Out	Rear_Vehicle	560233	female
CIND-11.B	Parcelrack	560908	female	EI	Enginecmpt.	563739	male
CINDWC-1.A	Parcelrack	560908	female	L1A	Engine_Cmpt	560774	male
CINDWC-1.B	Parcelrack	560908	female	L16.A	Frontroof	562615	female
CL1	FJB	562485	male	L16.B	Frontroof	562615	female
CL1	FJB	562486	female	L17.A	Frontroof	562615	female
CL58A	Aisle_Section	560898	male	L17.B	Frontroof	562615	female
CL58A	Aisle_Section	560900	female	L18	Entrance_Door	562549	male
CL58B	Aisle_Section	560898	male	L19	Entracedoor	562486	female
CL58B	Aisle_Section	560900	female	L20	Entracedoorstep	562486	female
CMo61	Parcelrack	561247	male	L21	Upper_front	562486	female
CMo61	Parcelrack	561248	female	L22	Upper_front	562486	female
CP1	Passenger_Area	561782	male	L23	Upper_front	562486	female
CP1	Passenger_Area	561781	female	L24	Upper_front	562486	female
CP2	Passenger_Area	561782	male	L25	Upper_front	562486	female
CP2	Passenger_Area	561781	female	L26	Upper_front	562486	female
CP3	Passengersarea	561782	male	L27	Upper_front	562486	female
CP3	Passengersarea	561781	female	L28	Parcelrack	560898	male
CP4	Passenger_Area	561782	male	L29	Parcelrack	560898	male
CP4	Passenger_Area	561781	female	L30	Parcelrack	560898	male
CP5	Passenger_Area	561782	male	L30A.A	Parcelrack	560898	male
CP5	Passenger_Area	561781	female	L30B.A	Parcelrack	560898	male
CP7	Passenger_Area	562337	male	L31	Parcelrack	560898	male
CP7	Passenger_Area	562338	female	L32	Parcelrack	560898	male
CP_Dr	Passsection	561782	male	L33	Parcelrack	560898	male
CPA17B	RJB	562337	male	L34	Parcelrack	560898	male
CPA17B	RJB	562338	female	L35	Parcelrack	560898	male
CPmod	Passenger_Area	561782	male	L36	Parcelrack	560898	male
CPmod	Passenger_Area	561781	female	L37	Parcelrack	560898	male
CSo53	Rear_axle_cmpt.	561690	male	L38	Parcelrack	560898	male
CSo53	Rear_axle_cmpt.	561566	female	L39	Parcelrack	560898	male
CSo58	Rear_axle_cmpt.	561690	male	L40	Parcelrack	560898	male
CSo58	Rear_axle_cmpt.	561566	female	L41	Parcelrack	560898	male
CSw102	Rear_vehicule	562549	male	L42	Parcelrack	560898	male
CSw102	Rear_vehicule	562550	female	L43	Parcelrack	560898	male
CSX1	Engine_Cmpt	563135	male	L44	Parcelrack	560898	male

CONNECTORS LIST

No	Location	Part #	Gender	No	Location	Part #	Gender
L45	Parcelrack	560898	male	L82A	Rearvehicule	562348	female
L46	Parcelrack	560898	male	L83A	Rearvehicule	562348	female
L47	Parcelrack	560898	male	L84	Rear_roof	562486	female
L48	Parcelrack	560898	male	L85	Rear_roof	562486	female
L49	Parcelrack	560898	male	L86	Rear_roof	562486	female
L50	Parcelrack	560898	male	L87	Rear_roof	562486	female
L51	Parcelrack	560898	male	L88	Rear_roof	562486	female
L52	Parcelrack	560898	male	L89	Rear_roof	562486	female
L52	Parcelrack	560900	female	L90	Rear_roof	562486	female
L52A	Parcelrack	560898	male	L93.A	Rear_roof	563069	female
L53	Parcelrack	560898	male	L93.B	Engine_Cmpt.	563069	female
L53	Parcelrack	560900	female	L94.A	Engine_Cmpt.	563069	female
L53A	Parcelrack	560898	male	L94.B	Engine_Cmpt.	563069	female
L54	Parcelrack	560898	male	L95	Outside_Front_LH	562485	male
L54	Parcelrack	560900	female	L95A	Outside_Front_LH	562485	male
L54A	Parcelrack	560898	male	L96	Outside_Front_RH	562485	male
L55	Parcelrack	560898	male	L96A	Outside_Front_RH	562485	male
L55	Parcelrack	560900	female	L97.A	Outside_Front_LH	563069	female
L55A	Parcelrack	560898	male	L97.B	Outside_Front_LH	563069	female
L56	Parcelrack	560898	male	L98.A	Outside_Front_RH	563069	female
L56	Parcelrack	560900	female	L98.B	Outside_Front_RH	563069	female
L56A	Parcelrack	560898	male	L140	Lavatory	561247	male
L57	Parcelrack	560898	male	L141	Upper_front	561247	male
L57	Parcelrack	560900	female	L142	Lavatory	562006	male
L57A	Parcelrack	560898	male	L143	Parcel_rack	561186	male
L58	Parcelrack	560898	male	L144	Parcelrack	561186	male
L58	Parcelrack	560900	female	L145	Parcelrack	561186	male
L58A	Parcelrack	560898	male	L146	Parcelrack	561186	male
L63	Front_Side_LH	562155	male	L147	Parcelrack	561186	male
L64	Outside_Front_RH	562155	male	L148	Parcelrack	561186	male
L64X	Aisle_Section	560898	male	L149	Parcelrack	561186	male
L65	Outside_Front_LH	562155	male	L150	Parcelrack	561186	male
L66	Out_Side_Front_LH	562155	male	L151	Parcelrack	561186	male
L67	4th_Lugg_Cmpt	562155	male	L152	Parcelrack	561186	male
L68	4th_Lugg_Cmpt	562155	male	L153	Parcelrack	561186	male
L69	4th_Lugg_Cmpt	562155	male	L154	Parcelrack	561186	male
L70	4th_Lugg_Cmpt	562155	male	L155	Parcelrack	561186	male
L72	Rear_Vehicle	562155	male	L156	Parcelrack	561186	male
L74	Rear_Vehicle	562155	male	L157	Parcelrack	561186	male
L75	Rearenginedoor	562155	male	L158	Parcelrack	561186	male
L76	Rear_engine_door	562155	male	L173	Parcelrack	563590	female
L81.A	Rear_Vehicle	562835	female	L174A	Parcelrack	563590	female
L81.B	Rear_Vehicle	562834	male	L175	Engine_Cmpt.	563590	female

CONNECTORS LIST

No	Location	Part #	Gender	No	Location	Part #	Gender
L176	5th_Lugg_Cmpt	561247	male	L254	Parcelrack	561186	male
L177	5th_Lugg_Cmpt	561247	male	L255	Parcel_rack	561186	male
L178	3rd_Lugg_Cmpt	561247	male	L256	Parcelrack	561186	male
L179	3rd_Lugg_Cmpt	561247	male	L257	Parcelrack	561186	male
L180	2nd_Lugg_Cmpt	561247	male	L258	Parcel_rack	561186	male
L181	2nd_Lugg_Cmpt	561247	male	L282	Engine_Cmpt	561690	male
L182	1st_Lugg_Cmpt	561247	male	L285.A	Rear_Vehicle	562835	female
L183	1st_Lugg_Cmpt	561247	male	L285.B	Rear_Vehicle	562834	male
L184	Servicecmpt.	561247	male	L286.A	Rear_Vehicle	562835	female
L185.A	Servicecmpt.	561539	male	L286.B	Rear_Vehicle	562834	male
L185.B	Servicecmpt.	561539	male	L290	Engine_door	562565	female
L186.A	Dash	561539	male	L291	Engine_door	562565	female
L186.B	Dash	561539	male	L298A	Enginecmpt.	563590	female
L187	Engine_Cmpt	561690	male	L306	RJBcmpt.	561247	male
L188	Service_Cmpt	562486	female	L309.	Rear_LH_Lugg	564576	male
L193.A	Dash	560488	female	L309D.	Drivers_Area	564576	male
L193.B	Dash	560488	female	L310.	Rear_LH_Lugg	564576	male
L194.A	Dash	562019	female	L310D.	Drivers_Area	564576	male
L194.B	Dash	560488	female	L314	Front_vehicle	562789	male
L195.A	Dash	560488	female	L315	Front_vehicle	562789	male
L195.B	Dash	560488	female	L319	Under_WCL_platform	561247	male
L199	Enginecmpt.	562848	male	L320	Luggage_Cmpt	561247	male
L201	Upper_front	561247	male	L350A.A	Rearaxlecmpt.	564552	male
L202	Upper_front	561247	male	L350A.B	Rearaxlecmpt.	563340	male
L203	RH_Console	561690	male	L350A.C	Rearaxlecmpt.	562251	male
L204	Parcel_Rack_RH	562803	male	L600	Luggage_Cmpt	562155	male
L205	Enginecmpt.	562485	male	L601	Luggage_Cmpt	562155	male
L206	Parcel_Rack_RH	562803	male	L602	Luggage_Cmpt	562155	male
L211	Entrace_Door_step	562486	female	L603	Luggage_Cmpt	562155	male
L212	outside_rear_LH_RH	563589	male	L604	Luggage_Cmpt	562155	male
L213	outside_rear_LH_RH	563589	male	L605	Luggage_Cmpt	562155	male
L214	outside_rear_LH_RH	563589	male	L606	Luggage_Cmpt	562155	male
L243	Parcelrack	561186	male	L607	Luggage_Cmpt	562155	male
L244	Parcelrack	561186	male	L634	Aisle_Section	560898	male
L245	Parcelrack	561186	male	L635	Aisle_Section	560898	male
L246	Parcelrack	561186	male	L650.A	Aisle_Section	560898	male
L247	Parcel_rack	561186	male	L660_1	Rear_Galley	560898	male
L248	Parcelrack	561186	male	L660_2	Rear_Galley	560898	male
L249	Parcelrack	561186	male	L660_3	Rear_Galley	560898	male
L250	Parcel_rack	561186	male	L661.A	Rear_Galley	560081	female
L251	Parcel_rack	561186	male	L661.B	Rear_Galley	560081	female
L252	Parcelrack	561186	male	Mic_Driver_1.A	Parcel_rack	560999	male
L253	Parcel_rack	561186	male	Mic_Driver_2.A	Parcel_rack	560999	male

CONNECTORS LIST

No	Location	Part #	Gender	No	Location	Part #	Gender
				Mo73	Enginecmpt.	568089	male
Mic_Driver_3.A	Parcel_rack	560999	male	PC1	FJB	562650	male
Mic_Guide_1.A	Parcel_rack	560999	male	PC1	FJB	562649	female
Mic_Guide_2.A	Parcel_rack	560999	male	PF	FJB	561782	male
Mic_Guide_3.A	Parcel_rack	560999	male	PF	FJB	561781	female
Mo.10	Parcel_rack	561515	male	PF1	Passenger_Area	561782	male
Mo.10	Parcel_rack	561552	female	PF1	Passenger_Area	561781	female
Mo.11	Parcel_rack	561515	male	PF1A	Passenger_Area	561782	male
Mo.11	Parcel_rack	561552	female	PF1A	Passenger_Area	561781	female
Mo3	Dash	561667	female	Pot2	Dash	561550	male
Mo4	Dash	564161	male	PR	Parcelrack	561782	male
Mo5	Upper_front	561550	male	PR	Parcelrack	561781	female
Mo6	Front_vehicle	561690	male	PR1	Passenger_Area	561782	male
Mo7.	Condcmpt	561890	male	PR1	Passenger_Area	561781	female
Mo8.	Condcmpt	561890	male	PR1A	Passenger_Area	561782	male
Mo10	Parcel_rack	561515	male	PR1A	Passenger_Area	561781	female
Mo11	Parcel_rack	561515	male	R1	RJB	562486	female
Mo12	Engine_Cmpt	561690	male	R3	RJB	563409	male
Mo13	Engine_Cmpt	561690	female	R4	FJB	564496	male
Mo14	Engine_Cmpt	561566	female	R5	RJB	564496	male
Mo15	Front_Ceiling	560900	female	R12	Evap_Cmpt	563409	male
Mo16	Front_Ceiling	560900	female	R16	RJB	564496	male
Mo17	RH_Console	563626	male	R20	RJB	564496	male
Mo18	Fr_Service_Door	562474	male	R21	FJB	560525	male
Mo19	Fr_Service_Door	562474	male	R23A	FJB	564496	male
Mo20	Fr_Service_Door	562474	male	R26	Evap_Cmpt	564496	male
Mo21	Upper_front	561186	male	R27	Dash	564496	male
Mo22	RH_Console	561186	male	R28	FJB	564496	male
Mo27.	Condcmpt	561890	male	R29	RJB	563409	male
Mo28	Condcmpt	563691	male	R30	FJB	564496	male
Mo28.	Condcmpt	561890	male	R31	FJB	564496	male
Mo54	Service_Cmpt	562474	male	R34	RJB	564210	male
Mo61	Parcel_rack	561248	female	R35	RJB	564210	male
Mo62	FrontHatch	562486	female	R36	Dash	564496	male
Mo63	RearHatch	562486	female	R37	Dash	564496	male
Mo65	Enginecmpt.	568089	male	R38	FJB	564496	male
Mo67	Enginecmpt.	568089	male	R40	RJB	564496	male
Mo68	Enginecmpt.	568089	male	R47	Parcelrack	564496	male
Mo69	Enginecmpt.	568089	male	R72	5th_Bay	563409	male
Mo70	Enginecmpt.	568089	male	R73	5th_Bay	563409	male
Mo71	Enginecmpt.	568089	male	R210	Parcelrack	560525	male
Mo72	Enginecmpt.	568089	male	R622	Parcelrack	561183	male

CONNECTORS LIST

No	Location	Part #	Gender	No	Location	Part #	Gender
R_12VISS	Parcel_rack	564496	male	Se25	Passenger_Area	561248	female
Res3.A	ParcelRack	563590	female	Se28	Pneumatic_plate	561690	male
Res4	RH_Console	563590	female	Se29	Engine_Cmpt	561566	female
Res6	FJB	563590	female	Se30	Enginedoor	562877	female
Res6A	FJB	563589	male	Se31	Enginedoor	562877	female
Res6A	FJB	563590	female	Se32	Rear_Axle_Cmpt	562426	male
Res6B	FJB	563589	male	Se33	Rear_Axle_Cmpt	562856	male
Res6B	FJB	563590	female	Se34	Rear_Axle_Cmpt	562427	male
Res7	dash	563590	female	Se35	Rear_Axle_Cmpt	562426	male
Res7A	dash	563589	male	Se36	Rear_Axle_Cmpt	562427	male
Res7A	dash	563590	female	Se37	Front_Axle_LH	641132	female
Res7B	dash	563589	male	Se38	Front_Axle_RH	641132	female
Res7B	dash	563590	female	Se39	Rear_Axle_LH	641132	female
Res15	Engine_Cmpt	561782	male	Se40	Rear_Axle_LH	641132	female
Res31	Ureacmpt.	562350	male	Se41	Condensor_cmpt.	562877	female
Res32	Ureacmpt.	563764	female	Se45	Servicecmpt.	563409	male
Res46	FJB	563590	female	Se46	Rearaxlecmpt.	562348	female
Res53	dash	563590	female	Se49	Engine_Cmpt	561690	male
Res99	dash	563590	female	Se51	Driverseat	563589	male
Se2	Service_Cmpt	561566	female	Se53	Service_Cmpt	563159	female
Se4	Window_RH	561477	female	Se54	Service_Cmpt	563159	female
Se5	Window_RH	561477	female	Se55	Service_Cmpt	563159	female
Se6	Window_RH	561477	female	Se56	WCLdoor	562479	female
Se7	Window_LH	561477	female	Se57	PneumaticPanel	563159	female
Se8	Window_LH	561477	female	Se60	Service_Cmpt	563409	male
Se9	Window_LH	561477	female	Se63	Rearaxlecmpt.	641132	female
Se10	FJB	561477	female	Se64	Rearaxlecmpt.	641132	female
Se11.A	Cond_Cmpt	560082	female	Se65	Dash	564042	female
Se11.B	Cond_Cmpt	560082	female	Se66	FJB	564039	female
Se11.C	Cond_Cmpt	560082	female	Se67	Frontaxlecmpt.	563159	female
Se13	Engine_Cmpt	562350	male	Se69	Frontaxlecmpt.	563159	female
Se14.A	Driver_Area	561782	male	Se74	Rear_Axle_Cmpt	563340	male
Se14.B	Driver_Area	561781	female	Se79	Front_Axle	563340	male
Se15	RH_Console	560898	male	Se89	EngineCmpt	562350	male
Se17	Entrace_Door	560081	female	Se94	WCLdoor	562877	female
Se18	Servicecmpt.	561566	female	Se100	WCLdoor	562479	female
Se19_P	Service_Cmpt	563677	male	shell1_633	Driver_Area	561626	female
Se19_S	Service_Cmpt	563677	male	shell1_1618	Driver_Area	562471	male
Se20	Evap_Cmpt	562426	male	So3	RH_Console	641385	male
Se21	Dash	561248	female	So4	RH_Console	641385	male
Se23	Engine_Cmpt	563159	male	So5	RH_Console	641385	male
Se24	Evap_Cmpt	563758	female	So6	RH_Console	641385	male

CONNECTORS LIST

No	Location	Part #	Gender	No	Location	Part #	Gender
So7	Service_Cmpt	561566	female	spBar27	Rear_axle_cmpt	564135	male
So8	Servicecmpt.	641385	male	Spk1_L	Parcel_Rack_LH	563994	male
So9	Enginecmpt.	560016	female	Spk1_R	Parcel_Rack_RH	563994	male
So10	Cond_Cmpt	562485	male	Spk2_L	Parcel_Rack_LH	563994	male
So11	Cond_Cmpt	561566	female	Spk2_R	Parcel_Rack_RH	563994	male
So13	Evap_Cmpt	563204	female	Spk3_L	Parcel_Rack_LH	563994	male
So14	Servicecmpt.	641385	male	Spk3_R	Parcel_Rack_RH	563994	male
So15	Servicecmpt.	641385	male	Spk4_L	Parcel_Rack_LH	563994	male
So16	Servicecmpt.	641385	male	Spk4_R	Parcel_Rack_RH	563994	male
So17	Servicecmpt.	562848	male	Spk5_L	Parcel_Rack_LH	563994	male
So18	Pneumatic_plate	641385	male	Spk5_R	Parcel_Rack_RH	563994	male
SO18_RH	Pneumatic_plate	641385	male	Spk6_L	Parcel_Rack_LH	563994	male
So19	Pneumatic_plate	641385	male	Spk6_R	Parcel_Rack_RH	563994	male
SO19_RH	Pneumatic_plate	641385	male	Spk7_L	Parcel_Rack_LH	563994	male
So20	Servicecmpt.	641385	male	Spk7_R	Parcel_Rack_RH	563994	male
So21	Front_Axle_Cmpt	564046	female	Spk8_L	Parcel_Rack_LH	563994	male
So22	Front_Axle_Cmpt	564046	female	Spk8_R	Parcel_Rack_RH	563994	male
So23	Rear_Axle_Cmpt	564046	female	Spk9_L	Parcel_Rack_LH	563994	male
So24	Rear_Axle_Cmpt	564046	female	Spk9_R	Parcel_Rack_RH	563994	male
So27	Rearaxlecmpt.	564045	female	Spk10_L	Parcel_Rack_LH	563994	male
So50	Rearaxlecmpt.	564046	female	Spk10_R	Parcel_Rack_RH	563994	male
So52	Rearaxlecmpt.	564045	female	Spk11_L	Parcel_Rack_LH	563994	male
So54	Enginecmpt.	564045	female	Spk11_R	Parcel_Rack_RH	563994	male
So60	Enginecmpt.	562848	male	Spk12_L	Parcel_Rack_LH	563994	male
SO60.	Enginecmpt.	562848	male	Spk12_R	Parcel_Rack_RH	563994	male
So70	Enginecmpt.	561566	female	Spk13_L	Parcel_Rack_LH	563994	male
spBar4	Enginecmpt.	564135	male	Spk13_R	Parcel_Rack_RH	563994	male
spBar5	Enginecmpt.	564135	male	Spk14_L	Parcel_Rack_LH	563994	male
spBar6	Enginecmpt.	564135	male	Spk14_R	Parcel_Rack_RH	563994	male
spBar7	Enginecmpt.	564135	male	Spk15_L	Parcel_Rack_LH	563994	male
spBar11	Engine_Cmpt.	564135	male	Spk15_R	Parcel_Rack_RH	563994	male
spBar12	Engine_Cmpt.	564135	male	Spk16_L	Parcel_Rack_LH	563994	male
spBar13	Enginecmpt.	564135	male	Spk16_R	Parcel_Rack_RH	563994	male
spBar14	Enginecmpt.	564135	male	Spk16_R_Lav	Parcel_Rack_RH	563994	male
spBar15	Enginecmpt.	564135	male	SpkDr_L	Parcel_Rack_LH	563994	male
spBar16	Enginecmpt.	564135	male	SpkDr_R	Parcel_Rack_RH	563994	male
spBar19	Condensorcmpt.	564135	male	Sub1.A	Passenger_Area	564004	female
spBar20	Condensorcmpt.	564135	male	Sub2.A	Passenger_Area	564004	female
spBar21	Condensorcmpt.	564135	male	Sw1.C258	Driver_Area	561188	female
spBar22	Enginecmpt.	564135	male	Sw1.C259	Driver_Area	561186	male
spBar23	Enginecmpt.	564135	male	Sw2	Dash	562763	male
spBar24	Enginecmpt.	564135	male	Sw3	Dash	562763	male
spBar26	Rear_axle_cmpt	564135	male	Sw4	Dash	562763	male

CONNECTORS LIST

No	Location	Part #	Gender	No	Location	Part #	Gender
Sw5	Dash	562763	male	Sw51.B	1st_Lugg_Cmpt	562486	female
Sw6	Dash	562763	male	Sw52.A	1st_Lugg_Cmpt	562485	male
Sw10A	LH_Console	562763	male	Sw52.B	1st_Lugg_Cmpt	562486	female
Sw12	Dash	562763	male	Sw55.A	Lavatory	560488	female
Sw14	Dash	562763	male	Sw55.B	Lavatory	560488	female
Sw16	Dash	562763	male	Sw56.A	Lavatory	560488	female
Sw17.A	Dash	562763	male	Sw56.B	Lavatory	560488	female
SW18_RH	dash	562763	male	Sw58	Engine_Cmpt.	563135	male
Sw18A	dash	562763	male	Sw59	Enginecmpt.	563135	male
Sw20	Dash	562763	male	Sw63A	LHConsole	562763	male
Sw21	Dash	562763	male	Sw64.A	Service_Cmpt	560815	female
Sw24	Dash	562763	male	Sw64.B	Service_Cmpt	560815	female
Sw25	Dash	562763	male	Sw70	dash	562763	male
Sw26	Dash	562763	male	Sw82	dash	563135	male
Sw27	Dash	562763	male	Sw83.A	Dash	560082	female
Sw29	Dash	562763	male	Sw83.B	Dash	560815	female
Sw30	RJB	563135	male	Sw83.C	Dash	560082	female
Sw32	Dash	561477	female	Sw83.D	Dash	560815	female
Sw33	Dash	561476	male	Sw85	LH_Console	562749	male
Sw34	Outside_Front_RH	562477	male	Sw95.A	WCLdoor	562615	female
Sw35	dash	562763	male	Sw95.B	WCLdoor	562615	female
Sw38	LH_Console	562763	male	Sw95.C	WCLdoor	562615	female
Sw39.A	RJB	562403	female	Sw96.A	WCL_Door	562615	female
Sw39.B	RJB	562403	female	Sw96.B	WCL_Door	562615	female
Sw40	LH_Console	561690	male	Sw96.C	WCLdoor	562615	female
Sw41	LH_Console	562749	male	Sw97.A	WCLsystem	562615	female
Sw42	Lugg_Cmpt	561636	female	Sw97.B	WCLsystem	562615	female
Sw43	LH_Console	561690	male	Sw97.C	WCLsystem	562615	female
Sw44.A	FJB	562403	female	Sw98.A	WCLsystem	562615	female
Sw44.B	FJB	562403	female	Sw98.B	WCLsystem	562615	female
Sw45.A	5th_Lugg_Cmpt	562485	male	Sw98.C	WCLsystem	562615	female
Sw45.B	5th_Lugg_Cmpt	562486	female	Sw100	dash	562763	male
Sw46.A	5th_Lugg_Cmpt	562485	male	Sw107	dash	562763	male
Sw46.B	5th_Lugg_Cmpt	562486	female	Sw108	dash	562763	male
Sw47.A	3rd_Lugg_Cmpt	562485	male	Sw122	dash	562763	male
Sw47.B	3rd_Lugg_Cmpt	562486	female	Sw124	dash	562763	male
Sw48.A	3rd_Lugg_Cmpt	562485	male	Sw125.A	dash	561457	female
Sw48.B	3rd_Lugg_Cmpt	562486	female	Sw125.B	dash	561457	female
Sw49.A	2nd_Lugg_Cmpt	562485	male	Sw126	dash	562763	male
Sw49.B	2nd_Lugg_Cmpt	562486	female	Sw137	Dash	562763	male
Sw50.A	2nd_Lugg_Cmpt	562485	male	Sw149	Dash	562763	male
Sw50.B	2nd_Lugg_Cmpt	562486	female	Sw156	LH_Console	562763	male
Sw51.A	1st_Lugg_Cmpt	562485	male	Sw157	Dash	562763	male

CONNECTORS LIST

No	Location	Part #	Gender	No	Location	Part #	Gender
Sw158	Dash	562763	male	VECR12	RJB	563187	male
Sw161	Dash	562763	male	VECT3	Rear_vehicule	563718	male
Sw162	Dash	562763	male	VECT4	Rear_vehicule	563714	male
Sw164	Dash	562763	male	Y80	Engine_Cmpt	563789	male
Sw221	Dash	562763	male	Y81	Cond_Cmpt	563793	male
Sw619	Dash	562763	male				
Sw629	Dash	562763	male				
Sw660	Rear_Galley	562763	male				
Sw661	Rear_Galley	562763	male				
Sw663	Rear_Galley	562763	male				
Sw670	dash	562763	male				
tab69	Parcelrack	561626	N/A				
Tab70a	Parcelrack	561626	N/A				
Tab70b	Parcelrack	561626	N/A				
tab71a	Parcelrack	561626	N/A				
TermL150	Parcel_rack	562505	N/A				
TermL248	Parcel_rack	562505	N/A				
Tstat_26.A	FJB	560079	N/A				
VECF1	FJB	563186	male				
VECF2	FJB	563183	male				
VECF3	FJB	563185	male				
VECF4	FJB	563182	male				
VECF9	FJB	563448	male				
VECF10	FJB	563181	male				
VECF11	FJB	563184	male				
VECF12	FJB	563187	male				
VECR1	RJB	563186	male				
VECR2	RJB	563183	male				
VECR3	RJB	563185	male				
VECR4	RJB	563182	male				
VECR4.	RJB	563182	male				
VECR9	RJB	563448	male				
VECR10	RJB	563181	male				
VECR11	RJB	563184	male				

Diodes list

Diode ID	Location	Part No	Function	Page
D1	FJB	561740	Accessories diode	3.2 Ign Start 3 B
D2	FJB	561740	Driver liquid solenoid diode	18.1 Defroster 2 D
D3	RH Console	561740	Flyback diode upper wipers motor	34.1 wiper washer 4 C
D4	RH Console	561740	Flyback diode lower wipers motor	34.1 wiper washer 4 D
D5	RH Console	561740	Flyback diode lower wipers motor	34.1 wiper washer 4 D
D6	RJB	561740	Flyback diode Master relay	3.1 Main Disti 1 B
D7	RH Console	561740	Entrace door diode	29.1 Entrance door 1 B
D8	Evap Cmpt	561740	Parcel rack liquid solenoid diode	18.3 Parcel Rack Vent 2 E
D9	Evap Cmpt	561740	HVAC diode	17.1 Pre Heat 3 B
D10	Evap Cmpt	561740	Pre-Heat diode	17.1 Pre Heat 3 B
D11	Evap Cmpt	561740	Passengers liquid solenoid diode	18.2 HvacPass 2 B
D12	FJB	565973	Horn while fire extinguisher diode	9.1 Horn 2 A
D13	FJB	561740	Front clearance lights diode	26.1 Front Lighting 2 D
D14	FJB	561740	Front clearance lighting while fire extinguisher diode	9.1 Horn 2 A
D15	Service Cmpt	561740	Flyback diode upper defrost water pump	18.4 Upper Defrost 3 D
D18	FJB	561740	5th luggage compartement lighting diode	25.1 Cmpt Lighting 3 C
D26	LH P-Rack	561740	Flyback diode Parcel rack fan	18.3 Parcel Rack Vent 3 B
D27	RH P-Rack	561740	Flyback diode Parcel rack fan	18.3 Parcel Rack Vent 3 C
D29	RJB	561740	Flyback diode Unloader	18.2 HvacPass 3 D
D30	Evap Cmpt	561740	Flyback diode Water pump	18.2 HvacPass 1 D
D31	RJB	561740	Flyback diode A/C clutch	18.2 HvacPass 3 D
D32	Engine Cmpt	561740	Flyback diode Air exhaust	11.1 Lavatory 3 E
D33	RJB	561740	Flyback diode Flushing pump	11.1 Lavatory 3 C
D44	FJB	561740	Ignition diode	3.2 Ign Start 3 B
D55	RJB	561740	Indirect & reading & docking lights diode	23.1 Indirect Lights 1 A
D73	Evap Cmpt	561740	Evaporator relay diode	18.2 HvacPass 4 C
D80	Evap Cmpt	561740	Cut off water preheater diode	38.1 Fire Supp 3 B

DIODES LIST

No	Location	Part #	Function	Page					
D1	FJB	561740	Accessoriesdiode	3,2					
D2	FJB	561740	Driverliquidsolenoiddiode	18,1					
D3	RHConsole	561740	Flybackdiodeupperwipersmotor	34,1					
D4	RHConsole	561740	Flybackdiodelowerwipersmotor	34,1					
D5	RHConsole	561740	Flybackdiodelowerwipersmotor	34,1					
D7	RH_Console	561740	Entracedoordiode	29,1					
D8	Evap_Cmpt	561740	Parcelrackliquidsolenoiddiode	18,3					
D9	Evap_Cmpt	561740	HVACdiode	17,1					
D10	Evap_Cmpt	561740	Pre-Heatdiode	17,1					
D11	Evap_Cmpt	561740	Passengersliquidsolenoiddiode	18,2					
D12	FJB	565973	Hornwhilefireextinguisherdiode	9,1					
D13	FJB	561740	Frontclearancelightsdiode	26,1					
D14	FJB	561740	FireExtinguisher	9,1					
D15	Service_Cmpt	561740	Flybackdiodeupperdefrostwaterpump	18,4					
D16	Evap_Cmpt	561740	MaxTemp	17,1					
D18	FJB	561740	5thluggagecompartementlightingdiode	25,1					
D26	LHP-Rack	561740	FlybackdiodeParcelrackfan	18,3					
D27	RHP-Rack	561740	FlybackdiodeParcelrackfan	18,3					
D29	RJB	561740	FlybackdiodeUnloader	18,2					
D30	Evap_Cmpt	561740	FlybackdiodeWaterpump	18,2					
D31	RJB	561740	FlybackdiodeA/Cclutch	18,2					
D32	Engine_Cmpt	561740	FlybackdiodeAirexhaust	11,1					
D33	RJB	561740	FlybackdiodeFlushingpump	11,1					
D44	FJB	561740	Ignitiondiode	3,2					
D55	RJB	561740	Indirect&reading&dockinglightsdiode	23,1					
D60	RJB	560931	Offshoreheatingsystem	17,1					
D61	Evap_Cmpt	381145	Offshoreheatingsystem	18,2					
D65	Evap_Cmpt	381145	Offshoreheatingsystem	18,2					
D73	Evap_Cmpt	561740	Evaporatorrelaydiode	18,2					
D80	Evap_Cmpt	561740	Cutoffwaterpreheaterdiode	38,1					

DIODES LIST

No	Location	Part #	Function	Page					
D60	RJB	560931	Offshoreheatingsystem	17,1SP1					
D61	Evap_Cmpt	381145	Offshoreheatingsystem	18,2SP1					
D65	Evap_Cmpt	381145	Offshoreheatingsystem	18,2SP1					

Resistors list

Resistor ID	Location	Part no	Function	Page
Res3	ParcelRack	563593	End of line resistance BBUS network 120 ohms 4W	6.1 MuxNetwork 0 B
Res4	RH_Console	563593	End of line resistance BBUS network 120 ohms 4W	6.1 MuxNetwork 4 C
Res6	FJB	563593	End of line resistance DBUS network 120 ohms 4W	6.2 Network 3 E
Res7	Dash	563593	End of line resistance DBUS network 120 ohms 4W	6.2 Network 4 B
Res8	Entrance Door Ceiling	563436	Upper defrost fan motor 6 ohms 50W	18.4 Upper Defrost 4 B
Res9	Dash	564164	Driver lights 25 ohms 25W	19.1 Driver Lights 1 D
Res14	RJB	563205	Evaporator fans 620 ohms 2W	18.2 HvacPass 1 A
Res15	Engine Cmpt	563587	End of line resistance Flame detec. device 10K ohms	38.1 Fire Supp 4 C
Res21	RJB	563205	RJB compartement lights 620 ohms 2W	25.1 Cmpt Lighting 2 C
Res22	RJB	563205	Luggage cmpt. lighting 620 ohms 2W	25.1 Cmpt Lighting 0 D
Res23	RJB	563205	WCL system 620 ohms 2W	36.1 WCL Ricon 3 B
Res31	Cmpt fuel tank	041123	Urea tank heating element (Heated hose)	14.2 Urea 3 B
Res32	Cmpt fuel tank	041123	Urea tank heating element (Heated hose)	14.2 Urea 3 B
Res53	FJB	563593	End of line resistance DBUS network 120 ohms 4W	6.2 Network 4 C
Res60	Dash	564160	USB device 470 ohms 1/4W	35.8 5vdc Audio In HDMI 4 B
Res61	Dash	564160	USB device 470 ohms 1/4W	35.8 5vdc Audio In HDMI 4 B

Relays list

Relay ID	Location	Part No	Function	Page
R1	RJB	562364	Master Relay	3.1 Main Disti 2 A
R3	RJB	563348	12v Ignition & Accessories	3.1 Main Disti 2 B
R4	FJB	563332	Cut off water preheater	38.1 Fire Supp 3 B
R5	RJB	563332	Batteries Charging Optionnal	17.1 Pre Heat 3 C
R12	Evap cmpt.	563348	Evaporator	18.2 HvacPass 4 C
R20	RJB	563332	Water Pump	17.1 Pre Heat 3 B
R21	FJB	560493	Emergency cutout	4.1 Dist 12V FJB 1 B
R22	FJB VECF	563269	Ecu Ignition	4.1 Dist 12V FJB 1 C
R23	FJB VECF	563269	Shutdown	4.1 Dist 12V FJB 1 D
R24	FJB VECF	563269	Ecu IShift	4.1 Dist 12V FJB 1 D
R25	FJB VECF	563269	24V Ignition	4.2 Dist 24V FJB 1 C
R26	Evap Cmpt	563332	Pre-Heat	18.2 HvacPass 3 B
R27	RH Console	563332	Lower wipers	34.1 wiper washer 3 D
R28	RH Console	563332	Upper wipers	34.1 wiper washer 4 A
R29	RJB	563348	Preheater Volvo	14.1 Engine Ecu 2 E
R30	RJB	563269	12v Engine running	4.1 Dist 12V FJB 4 A
R31	RJB	563269	12v Ignition	4.1 Dist 12V FJB 4 B
R34	RJB	564218	12v Rr Engine Ecu	3.2 Ign Start 3 D
R36	RJB	563269	Fire Extinguisher	9.1 Horn 1 A
R37	RJB	563269	Electric horn	9.1 Horn 2 B
R38	RJB	563269	Cigar lighter / 12V Outlet	30.2 Outlet 12v 1 B
R40	RJB	563332	Transmission IShift	15.2 Trans IShift 1 D
R47	WCL Pump	563332	WCL Door Open Option	36.1 WCL Ricon 6 C
R52	RJB VECT	563270	Clearance lights & side markers	26.4 Trailer 2 B
R53	RJB VECT	563270	Flashers left side	26.4 Trailer 2 B
R54	RJB VECT	563270	Brake lights	26.4 Trailer 2 C
R55	RJB VECT	563270	Flashers right side	26.4 Trailer 2 C
R56	RJB VECT	563270	Tail & licence lights	26.4 Trailer 2 D
R72	5th Bay	563348	Inverter 1	40.1 Inverters 3 C
R73	5th Bay	563348	Inverter 2	40.1 Inverters 3 C
R 12VISS	Parcel Rack LH 1st Cmpt	563337	Sound System	35.6 VSS HDMI 6 G
R Starter	RJB	564095	Starter Relay Control	3.2 Ign Start 3 D

Relays list

Relay ID	Location	Part No	Function	Page
R1	RJB	562364	Master Relay	3.1 Main Disti 2 A
R3	RJB	563348	12v Ignition & Accessories	3.1 Main Disti 2 B
R4	FJB	563332	Cut off water preheater	38.1 Fire Supp 3 B
R5	RJB	563332	Batteries Charging Optionnal	17.1 Pre Heat 3 C
R12	Evap cmpt.	563348	Evaporator	18.2 HvacPass 4 C
R20	RJB	563332	Water Pump	17.1 Pre Heat 3 B
R21	FJB	560493	Emergency cutout	4.1 Dist 12V FJB 1 B
R22	FJB VECF	563269	Ecu Ignition	4.1 Dist 12V FJB 1 C
R23	FJB VECF	563269	Shutdown 12V	4.1 Dist 12V FJB 1 D
R23A	FJB VECF	563269	Shutdown 24V	4.1 Dist 12V FJB 4 C
R24	FJB VECF	563269	Ecu IShift	4.1 Dist 12V FJB 1 D
R25	FJB VECF	563269	24V Ignition	4.2 Dist 24V FJB 1 C
R26	Evap Cmpt	563332	Pre-Heat	18.2 HvacPass 3 B
R27	RH Console	563332	Lower wipers	34.1 wiper washer 3 D
R28	RH Console	563332	Upper wipers	34.1 wiper washer 4 A
R29	RJB	563348	Preheater Volvo	14.1 Engine Ecu 2 E
R30	RJB	563269	12v Engine running	4.1 Dist 12V FJB 4 A
R31	RJB	563269	12v Ignition	4.1 Dist 12V FJB 4 B
R34	RJB	564218	12v Rr Engine Ecu	3.2 Ign Start 3 D
R36	RJB	563269	Fire Extinguisher	9.1 Horn 1 A
R37	RJB	563269	Electric horn	9.1 Horn 2 B
R38	RJB	563269	Cigar lighter / 12V Outlet	30.2 Outlet 12v 1 B
R40	RJB	563332	Transmission IShift	15.2 Trans IShift 1 D
R47	WCL Pump	563332	WCL Door Open Option	36.1 WCL Ricon 6 C
R52	RJB VECT	563270	Clearance lights & side markers	26.4 Trailer 2 B
R53	RJB VECT	563270	Flashers left side	26.4 Trailer 2 B
R54	RJB VECT	563270	Brake lights	26.4 Trailer 2 C
R55	RJB VECT	563270	Flashers right side	26.4 Trailer 2 C
R56	RJB VECT	563270	Tail & licence lights	26.4 Trailer 2 D
R72	5th Bay	563348	Inverter 1	40.1 Inverters 3 C
R73	5th Bay	563348	Inverter 2	40.1 Inverters 3 C

Relays list

Relay ID	Location	Part No	Function	Page
R 12VISS	Parcel Rack LH 1st Cmpt	563337	Sound System	35.6 VSS HDMI 6 G
R Starter	RJB	564095	Starter Relay Control	3.2 Ign Start 3 D

Relays list

Relay ID	Location	Part No	Function	Page
R1	RJB	560843	Master Relay	3,1
R3	RJB	563348	12v Ignition & Accessories	3,1
R4	FJB	563332	Cut off water preheater	38,1
R5	RJB	563332	Batteries Charging Optionnal	17,1
R12	Evap cmpt.	563348	Evaporator	18,2
R16	RJB	563332	Preheat Max temp	17,1
R20	Evap cmpt.	563332	Water Pump	17,1
R21	FJB	560493	Emergency cutout	3,2
R22	FJB VECF	563269	Ecu Ignition	4,1
R23	FJB VECF	563269	Shutdown 12V	4,1
R23A	FJB	563269	Shutdown 24V	4,1
R24	FJB VECF	563269	Ecu IShift	4,1
R25	FJB VECF	563269	24V Ignition	4,2
R26	Evap Cmpt	563332	Pre-Heat	18,2
R27	RH Console	563332	Lower wipers	34,1
R28	FJB	563332	Upper wipers	34,1
R29	RJB	563348	Preheater Volvo	14,1
R30	FJB	563269	12v Engine running	4,1
R31	FJB	563269	12v Ignition	4,1
R34	RJB	564218	12v Rr Engine Ecu	3,2
R35	RJB	564218	24vRrEngineEcu	3,2
R36	FJB	563269	Fire Extinguisher	9,1
R37	FJB	563269	Electric horn	9,1
R38	FJB	563269	Cigar lighter / 12V Outlet	30,2
R40	FJB	563332	Transmission IShift	15,2
R47	WCL Pump	563332	WCL Door Open Option	36,1
R52	RJB VECT	563270	Clearance lights & side markers	26,4
R53	RJB VECT	563270	Flashers left side	26,4
R54	RJB VECT	563270	Brake lights	26,4
R55	RJB VECT	563270	Flashers right side	26,4
R56	RJB VECT	563270	Tail & licence lights	26,4
R72	5th Bay	563348	Inverter 1	40,1
R73	5th Bay	563348	Inverter 2	40,1
R 12VISS	Parcel Rack LH 1st Cmpt	563337	Sound System	35,6
R Starter	RJB	564095	Starter Relay Control	3,2

Fuses list

Fuse ID	Location	Part No	Function	Rating	Page
F4	Fuse Box FJB	563280	Trans IShift & Volvo link	5 amp	4.2 Dist 24V FJB 2 B
F11	Fuse Box FJB	563282	Horn	20 amp	4.1 Dist 12V FJB 1 A
F12	Fuse Box FJB	563284	Spares VECF	15 amp	4.1 Dist 12V FJB 1 A
F13	Fuse Box FJB	563284	12VD Customer	15 amp	4.1 Dist 12V FJB 1 A
F14	Fuse Box FJB	563280	Spares VECF	5 amp	4.1 Dist 12V FJB 1 A
F15	Fuse Box FJB	563280	Spares VECF	5 amp	4.1 Dist 12V FJB 1 A
F16	Fuse Box FJB	563284	12V Eng. run	15 amp	4.1 Dist 12V FJB 1 A
F17	Fuse Box FJB	563165	Multiplex power	30 amp	4.1 Dist 12V FJB 1 A
F18	Fuse Box FJB	563165	Multiplex power	30 amp	4.1 Dist 12V FJB 1 A
F19	Fuse Box FJB	563165	Multiplex power	30 amp	4.1 Dist 12V FJB 1 B
F20	Fuse Box FJB	563280	Multiplex power	5 amp	4.1 Dist 12V FJB 1 B
F21	Fuse Box FJB	563165	Multiplex power	30 amp	4.1 Dist 12V FJB 1 B
F22	Fuse Box FJB	563280	Cadec	5 amp	4.1 Dist 12V FJB 1 B
F23	Fuse Box FJB	563165	ESP	30 amp	4.1 Dist 12V FJB 1 B
F24	Fuse Box FJB	563284	12V Ign	15 amp	4.1 Dist 12V FJB 1 B
F25	Fuse Box FJB	563284	12V outlets	15 amp	4.1 Dist 12V FJB 1 B
F26	Fuse Box FJB	563284	Spares VECF	15 amp	4.1 Dist 12V FJB 1 B
F27	Fuse Box FJB	563165	Spares VECF	30 amp	4.1 Dist 12V FJB 1 B
F29	Fuse Box FJB	563283	Networks	10 amp	4.1 Dist 12V FJB 1 C
F30	Fuse Box FJB	563280	Networks	5 amp	4.1 Dist 12V FJB 1 C
F33	Fuse Box FJB	563280	Multiplex power	5 amp	4.2 Dist 24V FJB 2 B
F34	Fuse Box FJB	563280	Multiplex power	5 amp	4.2 Dist 24V FJB 2 B
F35	Fuse Box FJB	563280	Multiplex power	5 amp	4.2 Dist 24V FJB 2 A
F36	Fuse Box FJB	563280	Start switch	5 amp	4.2 Dist 24V FJB 2 A
F37	Fuse Box FJB	563280	24 VD	5 amp	4.2 Dist 24V FJB 2 A
F39	Fuse Box FJB	563284	24 VD	15 amp	4.2 Dist 24V FJB 2 B
F40	Fuse Box FJB	563284	Fire suppression	15 amp	4.2 Dist 24V FJB 2 B
F41	Fuse Box FJB	563280	Spares VERF	5 amp	4.2 Dist 24V FJB 2 B
F42	Fuse Box FJB	563283	Transmission IShift	10 amp	4.1 Dist 12V FJB 1 D
F43	Fuse Box FJB	563282	Transmission IShift	20 amp	4.1 Dist 12V FJB 1 D

Fuses list

Fuse ID	Location	Part No	Function	Rating	Page
F44	Fuse Box FJB	563165	Multiplex power	30 amp	4.2 Dist 24V FJB 2 B
F45	Fuse Box FJB	563165	Multiplex power	30 amp	4.2 Dist 24V FJB 2 B
F46	Fuse Box FJB	563280	Multiplex power	5 amp	4.2 Dist 24V FJB 2 B
F47	Fuse Box FJB	563280	Multiplex power	5 amp	4.2 Dist 24V FJB 2 B
F50	Fuse Box FJB	563165	HVAC defroster	30 amp	4.2 Dist 24V FJB 2 C
F51	Fuse Box FJB	563280	Destination signs	5 amp	4.2 Dist 24V FJB 2 C
F52	Fuse Box FJB	563280	Spares VERF	5 amp	4.2 Dist 24V FJB 2 C
F53	Fuse Box FJB	563283	Clock & VSS	10 amp	4.2 Dist 24V FJB 2 C
F54	Fuse Box FJB	563284	Spares VERF	15 amp	4.2 Dist 24V FJB 2 C
F55	Fuse Box FJB	563283	Spares VERF	10 amp	4.2 Dist 24V FJB 2 D
F56	Fuse Box FJB	563284	Spares VERF	15 amp	4.2 Dist 24V FJB 2 D
F57	Fuse Box FJB	563283	Spares VERF	10 amp	4.2 Dist 24V FJB 2 D
F58	Fuse Box FJB	563284	Spares VERF	15 amp	4.2 Dist 24V FJB 2 D
F73	Fuse Box RJB	563283	Engine ECU Volvo	20 amp	5.1 Dist RJB 2 B
F90	Fuse Box RJB	563282	Urea system	20 amp	5.1 Dist RJB 1 A
F91	Fuse Box RJB	563282	Engine ECU Volvo	20 amp	5.1 Dist RJB 2 A
F95	Fuse Box FJB	563280	Trans Alisson & Volvo link	5 amp	4.2 Dist 24V FJB 2 C
F96	Fuse Box RJB	563282	Urea system	20 amp	5.1 Dist RJB 1 C
F99	Fuse Box RJB	563165	Engine ECU Volvo	30 amp	5.1 Dist RJB 1 A
F100	Fuse Box RJB	563283	Engine ECU Volvo	10 amp	5.1 Dist RJB 2 A
F101	Fuse Box RJB	564520	Power for Master relay	300 amp	3.1 Main Disti 3 A
F105	Fuse Box RJB	563282	Spare VECR	20 amp	5.1 Dist RJB 2 A
F106	Fuse Box RJB	563153	Multiplex power	30 amp	5.1 Dist RJB 1 A
F107	Fuse Box RJB	563153	Multiplex power	30 amp	5.1 Dist RJB 2 B
F108	Fuse Box RJB	563280	Networks	5 amp	5.1 Dist RJB 1 B
F109	Fuse Box RJB	563280	Engine & RJB cmpt. lights	5 amp	5.1 Dist RJB 2 B
F110	Fuse Box RJB	563283	Transmission Alisson	10 amp	5.1 Dist RJB 1 B
F112	Fuse Box RJB	563165	Spares VECR	30 amp	5.1 Dist RJB 1 B
F113	Fuse Box RJB	563283	Spare VECR	10 amp	5.1 Dist RJB 2 B
F114	Fuse Box RJB	563284	Spare VECR	15 amp	5.1 Dist RJB 1 B

Fuses list

Fuse ID	Location	Part No	Function	Rating	Page
F115	Fuse Box RJB	563283	Spare VECR	10 amp	5.1 Dist RJB 2 B
F116	Fuse Box RJB	563284	Spare VECR	15 amp	5.1 Dist RJB 1 B
F117	Fuse Box RJB	563283	Spare VECR	10 amp	5.1 Dist RJB 2 B
F118	Fuse Box RJB	563284	Spare VECR	15 amp	5.1 Dist RJB 1 B
F119	Fuse Box RJB	563283	Spare VECR	10 amp	5.1 Dist RJB 2 B
F120	Fuse Box RJB	563284	Spare VECR	15 amp	5.1 Dist RJB 1 B
F121	Fuse Box RJB	563284	Power for customer	15 amp	5.1 Dist RJB 2 B
F122	Fuse Box RJB	563283	Spare VECR	10 amp	5.1 Dist RJB 2 C
F123	Fuse Box RJB	563153	Pre-heat	25 amp	5.1 Dist RJB 1 C
F124	Fuse Box RJB	563153	Pre-heat	25 amp	5.1 Dist RJB 2 C
F126	Fuse Box RJB	563280	Engine ECU &HVAC	5 amp	5.1 Dist RJB 2 C
F127	Fuse Box RJB	563284	Pre-heat	15 amp	5.1 Dist RJB 1 C
F129	Fuse Box RJB	563284	Spare VECR	15 amp	5.1 Dist RJB 1 C
F130	Fuse Box RJB	563284	Spare VECR	15 amp	5.1 Dist RJB 2 C
F131	Fuse Box RJB	563280	Power for customer	5 amp	5.1 Dist RJB 1 C
F132	Fuse Box RJB	563280	Multiplex power	5 amp	5.1 Dist RJB 1 C
F133	Fuse Box RJB	563165	Multiplex power	30 amp	5.1 Dist RJB 2 D
F134	Fuse Box RJB	563165	Multiplex power	30 amp	5.1 Dist RJB 1 D
F135	Fuse Box RJB	563165	Multiplex power	30 amp	5.1 Dist RJB 2 D
F136	Fuse Box RJB	563165	Multiplex power	30 amp	5.1 Dist RJB 1 D
F137	Fuse Box RJB	563280	Equalizer	5 amp	5.1 Dist RJB 2 D
F138	Fuse Box RJB	563280	Reading lamps & chime	5 amp	5.1 Dist RJB 1 D
F139	Fuse Box RJB	563283	Alternators	10 amp	5.1 Dist RJB 2 D
F140	Fuse Box RJB	563283	Spare VECR	10 amp	5.1 Dist RJB 1 D
F141	Fuse Box RJB	563284	Evap Fan Mo7	15 amp	5.1 Dist RJB 2 D
F142	Fuse Box RJB	563284	Evap Fan Mo8	15 amp	5.1 Dist RJB 1 D
F143	Fuse Box RJB	563284	Evap Fan Mo27	15 amp	5.1 Dist RJB 2 D
F144	Fuse Box RJB	563284	Evap Fan Mo28	15 amp	5.1 Dist RJB 1 D
F145	Fuse Box RJB	563284	Spare VECR	15 amp	5.1 Dist RJB 2 D
F146	Fuse Box RJB	563283	Spare VECR	10 amp	5.1 Dist RJB 1 D

Fuses list

Fuse ID	Location	Part No	Function	Rating	Page
F147	Fuse Box RJB	563284	Power for customer	15 amp	5.1 Dist RJB 2 D
F148	Fuse Box RJB	563165	VSS	30 amp	5.1 Dist RJB 2 E
F149	Fuse Box RJB	563284	Spare VECR	15 amp	5.1 Dist RJB 1 E
F150	Fuse Box RJB	563283	Spare VECR	10 amp	5.1 Dist RJB 2 E
F151	Fuse Box RJB	563284	Spare VECR	15 amp	5.1 Dist RJB 1 E
F152	Fuse Box RJB	563283	Spare VECR	10 amp	5.1 Dist RJB 2 E
F199	RJB	564520	Electric fans drive	300 amp	13.1 FanDriveElectric 1 B
F200	Parcel Rack LH 1st Cmpt	563284	VSS HDMI	15 amp	35.6 VSS HDMI 4 G
F201	Parcel Rack LH 1st Cmpt	563284	VSS HDMI	15 amp	35.6 VSS HDMI 4 G
F202	Parcel Rack LH 1st Cmpt	563284	VSS HDMI	15 amp	35.6 VSS HDMI 4 H
F203	Parcel Rack LH 1st Cmpt	563282	VSS HDMI	20 amp	35.6 VSS HDMI 4 H
F209	RJB	564174	Engine pre-heater power	150 amp	14.1 Engine Ecu 3 E
F243	RJB	560893	24V while Evap. relay powered	3 amp	18.2 HvacPass 4 C
F301	VECT	563284	VECT Trailer interface	15 amp	26.4 Trailer 2 E
F302	VECT	563284	VECT Trailer interface	15 amp	26.4 Trailer 2 B
F303	VECT	563284	VECT Trailer interface	15 amp	26.4 Trailer 2 B
F304	VECT	563284	VECT Trailer interface	15 amp	26.4 Trailer 2 C
F305	VECT	563284	VECT Trailer interface	15 amp	26.4 Trailer 2 C
F306	VECT	563284	VECT Trailer interface	15 amp	26.4 Trailer 2 D
F307	VECT	563284	VECT Trailer interface	15 amp	26.4 Trailer 2 A

Fuses list

Fuse ID	Location	Part No	Function	Rating	Page
F4	Fuse Box FJB	563280	Trans Ishift	5 amp	4.2
F10	Fuse Box FJB	563280	Networks,Cluster,light	5 amp	4.1
F11	Fuse Box FJB	563282	Horn	20 amp	4.1
F12	Fuse Box FJB	563284	Spares VECF	15 amp	4.1
F13	Fuse Box FJB	563284	12VD Customer	15 amp	4.1
F14	Fuse Box FJB	563165	Spares VECF	30 amp	4.1
F15	Fuse Box FJB	563280	Vlink_Gateway	5 amp	4.1
F16	Fuse Box FJB	563284	12V Eng. run	15 amp	4.1
F17	Fuse Box FJB	563165	Multiplex power	30 amp	4.1
F18	Fuse Box FJB	563165	Multiplex power	30 amp	4.1
F19	Fuse Box FJB	563165	Multiplex power	30 amp	4.1
F20	Fuse Box FJB	563280	Multiplex power	5 amp	4.1
F21	Fuse Box FJB	563165	Multiplex power	30 amp	4.1
F22	Fuse Box FJB	563280	ELD	5 amp	4.1
F23	Fuse Box FJB	563165	ESP	30 amp	4.1
F24	Fuse Box FJB	563284	12V Ign	15 amp	4.1
F25	Fuse Box FJB	563284	12V outlets	15 amp	4.1
F26	Fuse Box FJB	563284	Spares VECF	15 amp	4.1
F27	Fuse Box FJB	563165	Spares VECF	30 amp	4.1
F29	Fuse Box FJB	563283	Networks	10 amp	4.1
F30	Fuse Box FJB	563280	Networks	5 amp	4.1
F33	Fuse Box FJB	563280	Multiplex power	5 amp	4.2
F34	Fuse Box FJB	563280	Multiplex power	5 amp	4.2
F35	Fuse Box FJB	563280	Multiplex power	5 amp	4.2
F36	Fuse Box FJB	563280	Start switch	5 amp	4.2
F37	Fuse Box FJB	563280	Haz/ExtDoorSW	5 amp	4.2
F39	Fuse Box FJB	563284	24 VD	15 amp	4.2
F40	Fuse Box FJB	563284	Fire suppression	15 amp	4.2
F41	Fuse Box FJB	563280	Spares VERF	5 amp	4.2
F42	Fuse Box FJB	563283	Transmission IShift	10 amp	4.1
F43	Fuse Box FJB	563282	Transmission IShift	20 amp	4.1
F44	Fuse Box FJB	563165	Multiplex power	30 amp	4.2
F45	Fuse Box FJB	563165	Multiplex power	30 amp	4.2
F46	Fuse Box FJB	563280	Multiplex power	5 amp	4.2
F47	Fuse Box FJB	563280	Multiplex power	5 amp	4.2
F50	Fuse Box FJB	563165	HVAC defroster	30 amp	4.2
F51	Fuse Box FJB	563280	Destination signs	5 amp	4.2
F52	Fuse Box FJB	563280	FMS GW	5 amp	4.2
F53	Fuse Box FJB	563283	Clock & VSS	10 amp	4.2
F54	Fuse Box FJB	563284	Wiper Washer	15 amp	4.2
F55	Fuse Box FJB	563283	B-Up CAM	10 amp	4.2
F56	Fuse Box FJB	563284	Spares VERF	15 amp	4.2

Fuses list

Fuse ID	Location	Part No	Function	Rating	Page
F57	Fuse Box FJB	563283	Spares VERF	10 amp	4.2
F58	Fuse Box FJB	563284	Spares VERF	15 amp	4.2
F73	Fuse Box RJB	563283	Engine ECU Volvo	20 amp	5.1
F90	Fuse Box RJB	563282	Urea system	20 amp	5.1
F91	Fuse Box RJB	563282	Engine ECU Volvo	20 amp	5.1
F95	Fuse Box FJB	563280	FMS GW/Ishift	5 amp	4.2
F96	Fuse Box RJB	563282	Urea system	20 amp	5.1
F99	Fuse Box RJB	563165	Engine ECU Volvo	30 amp	5.1
F100	Fuse Box RJB	563283	Engine ECU Volvo	10 amp	5.1
F101	Fuse Box RJB	564520	Power for Master relay	300 amp	3.1
F105	Fuse Box RJB	563282	Spare VECR	20 amp	5.1
F106	Fuse Box RJB	563153	Multiplex power	30 amp	5.1
F107	Fuse Box RJB	563153	Multiplex power	30 amp	5.1
F108	Fuse Box RJB	563280	Networks	5 amp	5.1
F109	Fuse Box RJB	563280	Engine & RJB cmpt. lights	5 amp	5.1
F110	Fuse Box RJB	563283	Transmission Alisson	10 amp	5.1
F112	Fuse Box RJB	563165	Trailer	30 amp	5.1
F113	Fuse Box RJB	563283	Spare VECR	10 amp	5.1
F114	Fuse Box RJB	563284	Spare VECR	15 amp	5.1
F115	Fuse Box RJB	563283	Spare VECR	20 amp	5.1
F116	Fuse Box RJB	563284	Spare VECR	15 amp	5.1
F117	Fuse Box RJB	563283	Spare VECR	20 amp	5.1
F118	Fuse Box RJB	563284	Spare VECR	15 amp	5.1
F119	Fuse Box RJB	563283	Spare VECR	30 amp	5.1
F120	Fuse Box RJB	563284	Spare VECR	15 amp	5.1
F121	Fuse Box RJB	563284	Power for customer	15 amp	5.1
F122	Fuse Box RJB	563283	Equalizer	10 amp	5.1
F123	Fuse Box RJB	563153	Spare VECR	25 amp	5.1
F124	Fuse Box RJB	563153	Spare VECR	25 amp	5.1
F126	Fuse Box RJB	563280	Engine ECU &HVAC	5 amp	5.1
F127	Fuse Box RJB	563284	Pre-heat	15 amp	5.1
F129	Fuse Box RJB	563284	Pre-heat	15 amp	5.1
F130	Fuse Box RJB	563284	Pre-heat	15 amp	5.1
F131	Fuse Box RJB	563280	Power for customer	5 amp	5.1
F132	Fuse Box RJB	563280	A57 Pwr	5 amp	5.1
F133	Fuse Box RJB	563165	A49 Pwr	30 amp	5.1
F134	Fuse Box RJB	563165	A52 Pwr	30 amp	5.1
F135	Fuse Box RJB	563165	A54 Pwr	30 amp	5.1
F136	Fuse Box RJB	563165	A53 Pwr	30 amp	5.1
F137	Fuse Box RJB	563280	R Max Temp	5 amp	5.1
F138	Fuse Box RJB	563280	Reading lamps & chime	5 amp	5.1
F139	Fuse Box RJB	563283	Alternators	10 amp	5.1

Fuses list

Fuse ID	Location	Part No	Function	Rating	Page
F140	Fuse Box RJB	563283	Spare VECR	10 amp	5.1
F141	Fuse Box RJB	563284	Evap Fan Mo7	15 amp	5.1
F142	Fuse Box RJB	563284	Evap Fan Mo8	15 amp	5.1
F143	Fuse Box RJB	563284	Evap Fan Mo27	15 amp	5.1
F144	Fuse Box RJB	563284	Evap Fan Mo28	15 amp	5.1
F145	Fuse Box RJB	563284	Spare VECR	15 amp	5.1
F146	Fuse Box RJB	563283	Spare VECR	10 amp	5.1
F147	Fuse Box RJB	563284	Power for customer	15 amp	5.1
F148	Fuse Box RJB	563165	12v Sound Syst	30 amp	5.1
F149	Fuse Box RJB	563284	Spare VECR	15 amp	5.1
F150	Fuse Box RJB	563283	Spare VECR	10 amp	5.1
F151	Fuse Box RJB	563284	Spare VECR	15 amp	5.1
F152	Fuse Box RJB	563283	Spare VECR	10 amp	5.1
F199	RJB	564520	Electric fans drive	300 amp	13.1
F200	Parcel Rack LH 1st Cmpt	563284	VSS HDMI	15 amp	35.6
F201	Parcel Rack LH 1st Cmpt	563284	VSS HDMI	15 amp	35.6
F202	Parcel Rack LH 1st Cmpt	563284	VSS HDMI	15 amp	35.6
F203	Parcel Rack LH 1st Cmpt	563282	VSS HDMI	20 amp	35.6
F209	RJB	564174	Engine pre-heater power	150 amp	14.1
F243	Evap_cmpt	560893	24V while Evap. relay powered	3 amp	18.2
F301	VECT	563284	VECT Trailer interface	15 amp	26.4
F302	VECT	563284	VECT Trailer interface	15 amp	26.4
F303	VECT	563284	VECT Trailer interface	15 amp	26.4
F304	VECT	563284	VECT Trailer interface	15 amp	26.4
F305	VECT	563284	VECT Trailer interface	15 amp	26.4
F306	VECT	563284	VECT Trailer interface	15 amp	26.4
F307	VECT	563284	VECT Trailer interface	15 amp	26.4

Wire identification chart

**Note that the identification comes from the uphill component.*

Wire identification exemple: 12 - A47J1.8 - 16

Voltage	Circuit number	Wire size
0		0000
5	***Ground circuits:***	000
0/12	Electronic = Use I/O module number followed by an "R" and pin number. (ex: A47RJ1.8, A54RJ2.14)	00
0/24	Electronic ground studs = Use number "00" followed with the stud location and sequential number. (ex:00R1,00F4)	0
12	Chassis = Use number "0" followed by the ground stud location and sequential number. (ex: 0EV1, 0FH2)	1
24		2
120	***Power and voltage carrying circuits:***	3
ANA	Power distribution = Use uphill component identification as circuit name. (ex: F96, CB22)	4
BBUS	Multiplex outputs = Use output module number and pin number as circuit name. (ex: A55J1.4, A49J2.9)	6
DATA	Relays, diodes, resistors and any other component outputs =	8
DBUS	Use component name and pin number as circuit name. (ex: Sw55.A, R30.87, D12.B)	10
J1587	***Networks:***	12
J1939	DL0 = Bbus mux DL7 = Engine subnet	14
J2284	DL1 = J1939 DL9 = Power train subnet	16
LIN	DL2 = J2284 900 / 901 = J1587	18
PWM	DL3 = Dbus mux	20
GND		22
...OTHER		24

Batteries and alternators

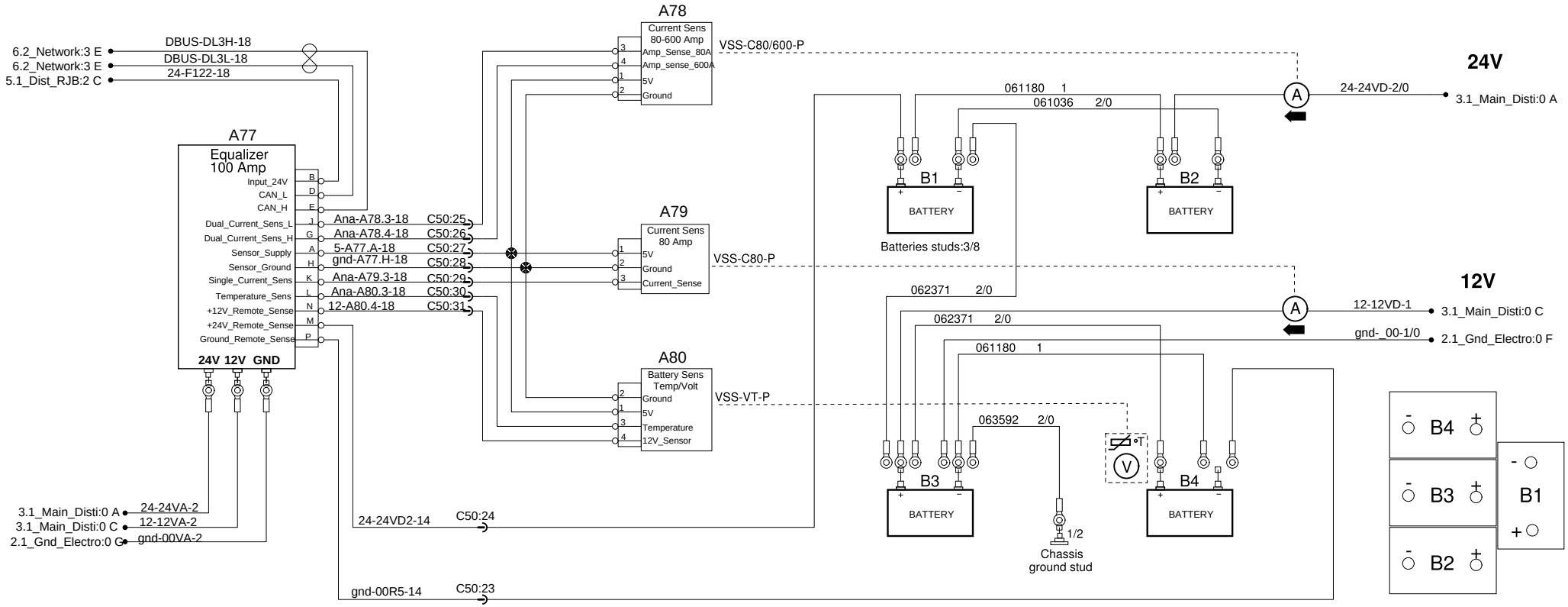

Alternators

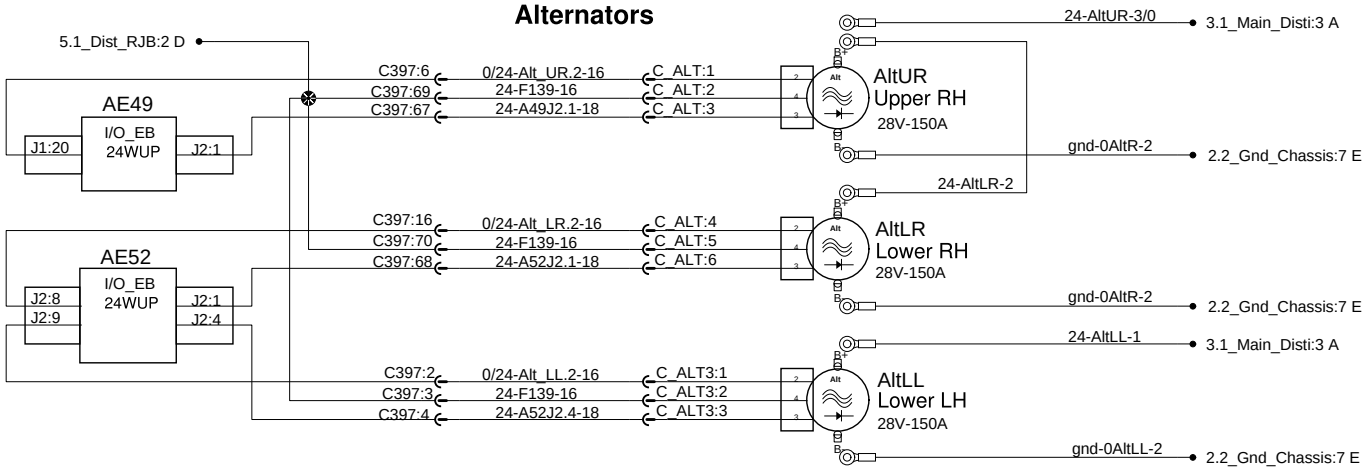

PREVOST®	WIRING DIAGRAM	No:D061640	Page:1.1	Rev:0

Batteries and alternators

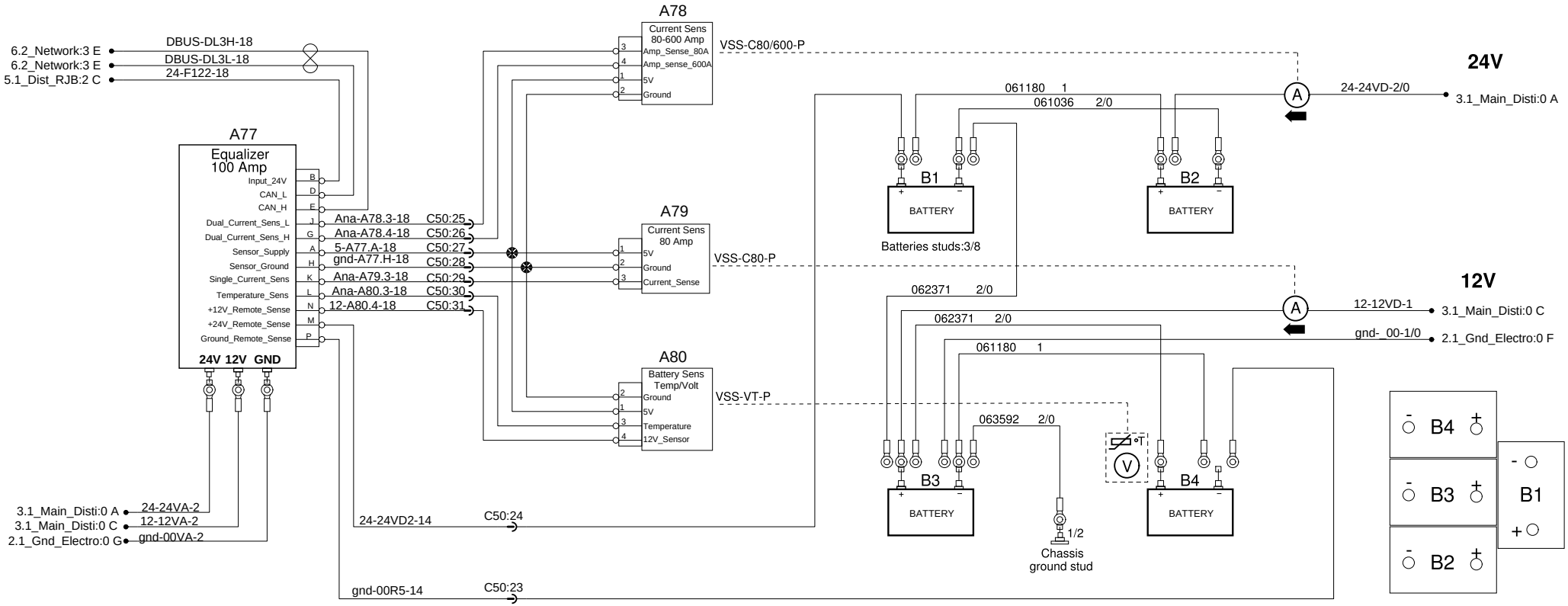

PREVOST®	WIRING DIAGRAM	No:D061640	Page:1.1	Rev:8

Batteries and alternators

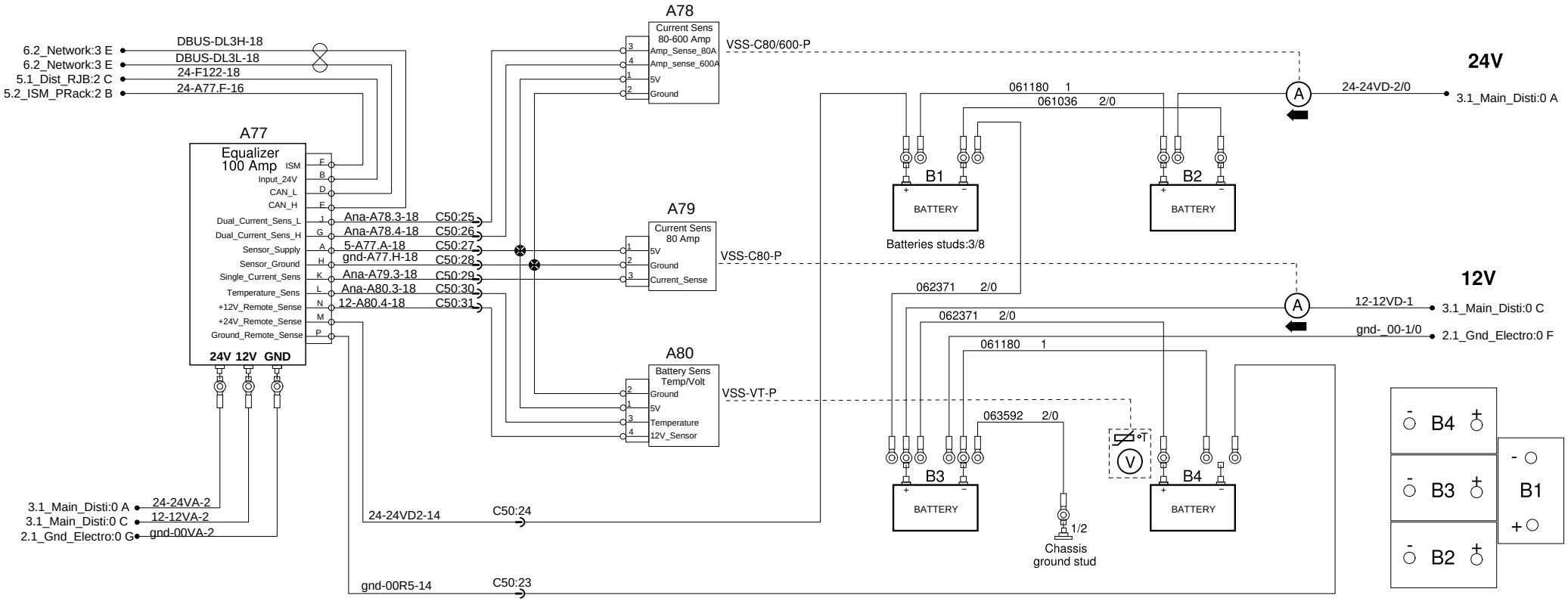

PREVOST®	WIRING DIAGRAM	No:D061640	Page:1.1	Rev:11

Alternators Remy

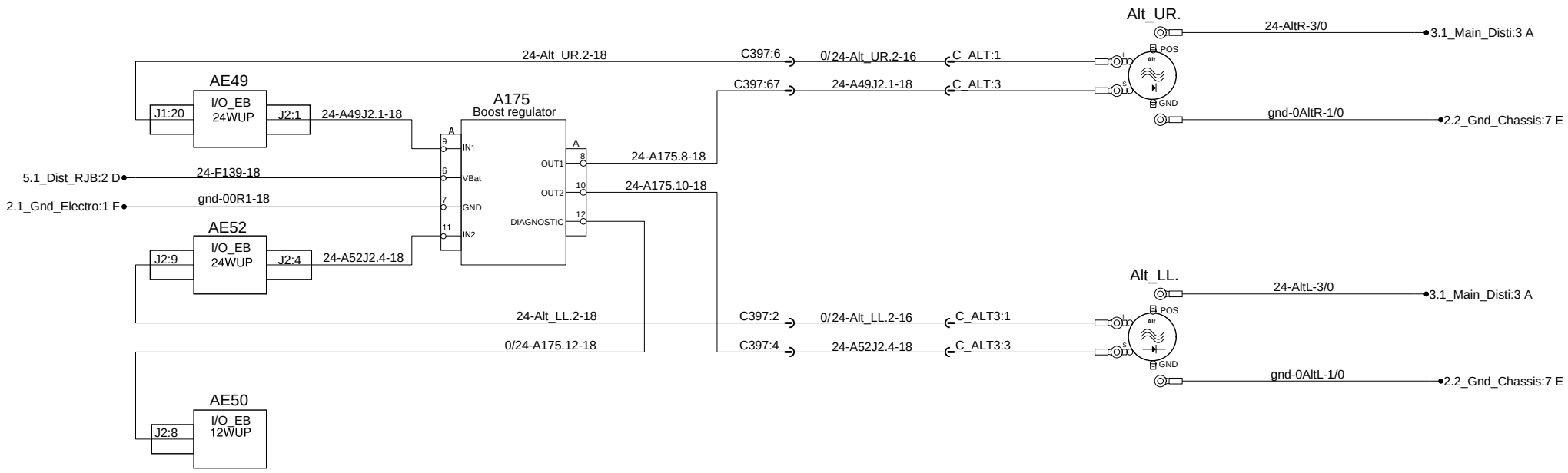

PREVOST®	WIRING DIAGRAM	No:D061640	Page:1.1 SP1	Rev:0

Alternators Bosch

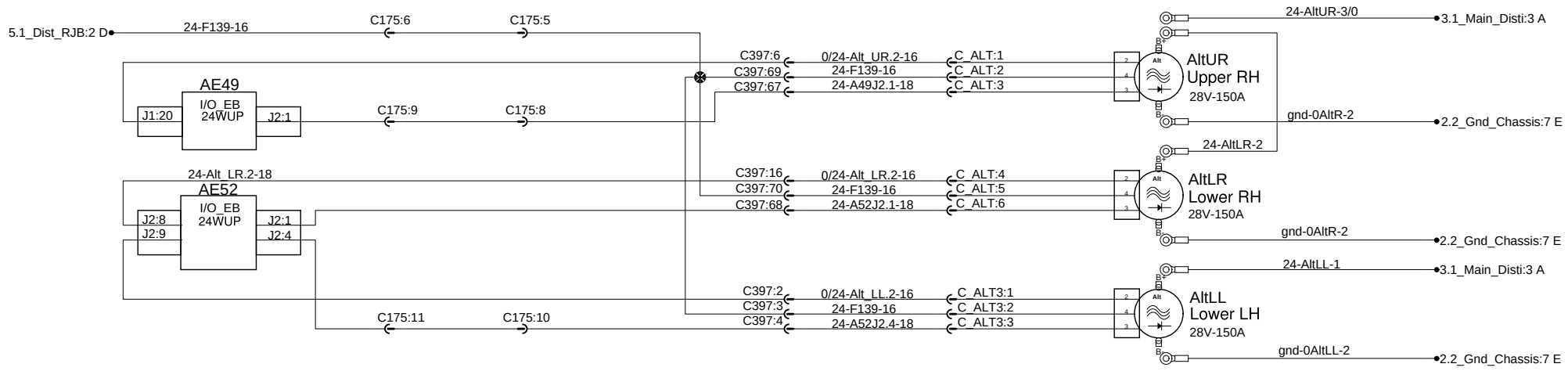

Alternators Remy

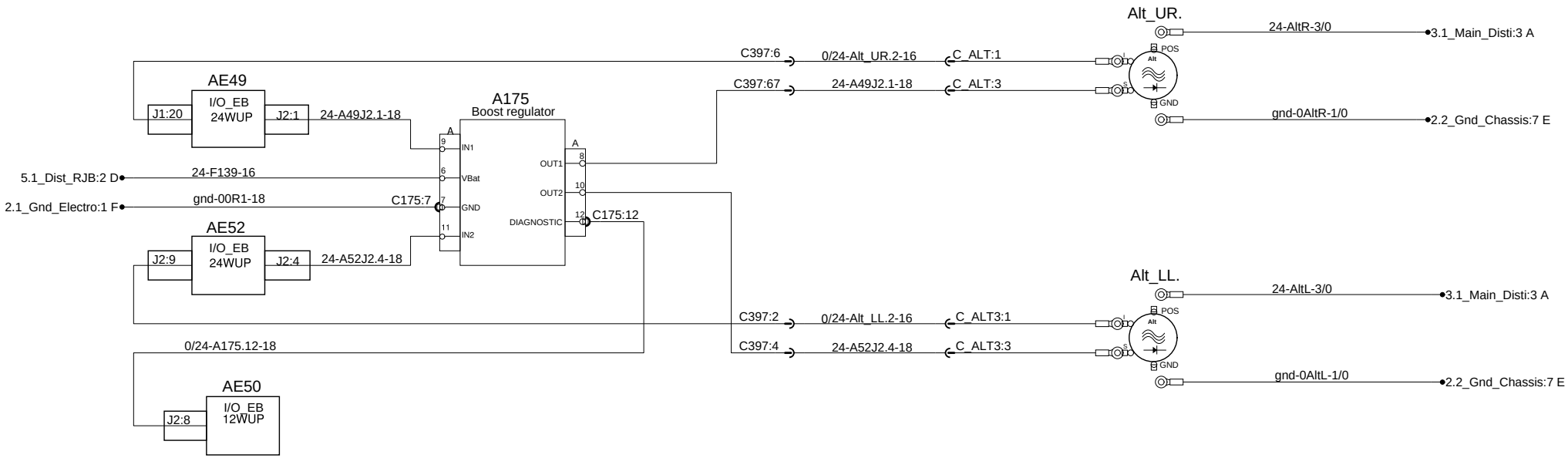

PREVOST®	WIRING DIAGRAM	No:D061640	Page:1.2	Rev:8

Electronic ground distribution

Ground distribution:
0-Electric gnd
00- Electronic Gnd

A-Dash - Lh console harness
F-Front junction box harness
FH-Front harness
R-Rear junction box harness
FR-Front to rear

Dash harness

gnd-00A2-16 — 23.1_Indirect_Lights:0 B
gnd-00A2-16 — 60.0_Cust_Adapt_Dash_Interface:2 B
gnd-00A1-16 — 7.1_Mux_Power:4 B
gnd-00A-18 — 34.1_wiper_washer:0 D
gnd-00A-18 — 18.4_Upper_Defrost:1 B
gnd-00A-18 — 29.1_Entrance_door:1 E
gnd-00A-18 — 22.2_Reading_lamps:4 F
gnd-00A-18 — 41.1_Steering:1 D
gnd-00A-18 — 19.1_Driver_Lights:1 D
gnd-00A-18 — 22.2_Reading_lamps:2 F
gnd-00A-18 — 18.3_Parcel_Rack_Vent:2 B
gnd-00A-18 — 16.1_ESP:0 A
gnd-00A-18 — 10.1_Cluster:3 B
gnd-00A-18 — 14.1_Engine_Ecu:8 D
gnd-00A-18 — 26.1_Front_Lighting:0 D
gnd-00A-18 — 12.1_Brake:2 B
gnd-00A-18 — 36.1_WCL_Ricon:3 A
gnd-00A-18 — 28.2_Destination_Signs:1 C
gnd-00A-18 — 26.1_Front_Lighting:0 A
gnd-00A-18 — 26.5_Fog_Corn_Dock_Lts:1 B
gnd-00A-18 — 26.1_Front_Lighting:1 E
gnd-00A-18 — 6.2_Network:4 C
gnd-00A-18 — 28.1_Dig_Clock_&_B-Up_Cam:2 D

gnd-00A2-14
gnd-00A1-16 — C71:4
gnd-00A-14 — C71:5

Lh console harness

C171:16
gnd-00A-16 — 9.1_Horn:1 D
gnd-00A-18 — 12.2_Trailler_ParkBrake:2 B
gnd-00A-18 — 14.1_Engine_Ecu:8 C
gnd-00A-18 — 17.1_Pre_Heat:1 D
gnd-00A-18 — 32.1_Kneeling:1 B
gnd-00A-18 — 33.1_Luggage_LockUnlock:1 B
gnd-00A-18 — 31.1_Mirror:1 A
gnd-00A-18 — 30.1_Drivers_Window:1 C
gnd-00A-18 — 32.1_Kneeling:1 D
gnd-00A-18 — 32.1_Kneeling:1 D

Front harness

gnd-00FH-14
gnd-00FH-18 — 34.1_wiper_washer:0 B
gnd-00FH-18 — 12.1_Brake:2 D
gnd-00FH-18 — 32.1_Kneeling:1 E
gnd-00FH1-12 — 18.1_Defroster:3 B
gnd-00FH2-10 — 7.1_Mux_Power:2 B
gnd-00FH2-10 — 7.1_Mux_Power:2 C

1/4

FJB harness

gnd-00F1-12 — 7.1_Mux_Power:1 D
gnd-00F1-12 — 7.1_Mux_Power:1 C
gnd-00F2-12 — 7.1_Mux_Power:1 D
gnd-00F2-12 — 7.1_Mux_Power:1 E
gnd-00F3-16 — 7.1_Mux_Power:1 B

1/4

FJB Electronic GND

gnd-00F-12
gnd-00F-18 — 12.2_Trailler_ParkBrake:2 B
gnd-00F-18 — 14.1_Engine_Ecu:5 C
gnd-00F-18 — 15.2_Trans_IShift:3 C
gnd-00F-18 — 42.4_ELD_ITS_Gateway:5 C
gnd-00F-18 — 15.2_Trans_IShift:1 D
gnd-00F-14 — 16.1_ESP:2 B
gnd-00F-18 — 30.2_Outlet_12v:1 B
gnd-00F-18 — 4.1_Dist_12V_FJB:2 C
gnd-00F-18 — 28.1_Dig_Clock_&_B-Up_Cam:2 B
gnd-00F-16 — 9.1_Horn:3 B
gnd-00F-18 — 37.2_SteeringCtrl:2 B
gnd-00F-18 — 38.1_Fire_Supp:0 C
gnd-00F-18 — 38.1_Fire_Supp:2 D
gnd-00F-18 — 4.1_Dist_12V_FJB:4 A
gnd-00F-18 — 4.1_Dist_12V_FJB:4 B
gnd-00F-18 — 9.1_Horn:1 A

gnd-00FR-1

RJB harness

gnd-00R1-18 — 3.2_Ign_Start:1 C
gnd-00R1-18 — 3.1_Main_Disti:1 A
gnd-00R1-18 — 6.2_Network:1 B
gnd-00R1-18 — 11.1_Lavatory:1 B
gnd-00R1-14 — 15.2_Trans_IShift:2 A
gnd-00R1-14 — 15.1_Trans_Allison:0 A
gnd-00R1-14 — 17.1_Pre_Heat:3 E
gnd-00R1-16 — 38.1_Fire_Supp:2 C
gnd-00R1-18 — 12.1_Brake:2 C
gnd-00R1-10
gnd-00R2-10 — 7.1_Mux_Power:2 E
gnd-00R2-12 — C17:2
gnd-00R2-12 — 7.1_Mux_Power:2 D
gnd-00R3-12 — 7.1_Mux_Power:4 C
gnd-00R3-12 — 7.1_Mux_Power:4 D
gnd-00R4-12 — 7.1_Mux_Power:4 D
gnd-00R4-12 — 7.1_Mux_Power:4 E
C17:92
gnd-00R4-16 — 7.1_Mux_Power:4 B
gnd-00R5-14 — 14.2_Urea:1 B
gnd-00R5-12 — 14.1_Engine_Ecu:3 C
gnd-00R5-8
gnd-00R5-18 — 26.4_Trailer:1 D

RJB Electronic GND

gnd-00VA-2 — 1.1_batteries:0 C
gnd-_00-1/0 — 1.1_batteries:3 C

Dash JB

AE55 (I/O_EA, 12WUP): J1:6, J1:18, J2:14
gnd-A55RJ1.18-18 — 41.1_Steering:2 B

AE56 (I/O_EA, 24WUP): J1:6, J1:18, J2:14
gnd-A56RJ1.18-18 — 27.1_Window_Ajar:3 C

FJB

AE41 (I/O_EA, 24WUP): J1:6, J1:18, J2:14
gnd-A41RJ1.6-18 — 32.1_Kneeling:4 E
gnd-A41RJ1.18-18 — 25.1_Cmpt_Lighting:1 D; 29.1_Entrance_door:4 E
gnd-A41RJ2.14-18 — 11.1_Lavatory:4 D

AE42 (I/O_EA, 24WUP): J1:6, J1:18, J2:14
gnd-A42RJ2.18-18 — 32.1_Kneeling:4 D
gnd-A42RJ2.14-18 — 32.1_Kneeling:1 C

AE43 (I/O_EB, 12WUP): J1:6, J1:17, J1:18, J2:2, J2:3, J2:14
gnd-A43RJ1.17-18 — 39.1_TPMS_ACB:0 A; 39.1_TPMS_ACB:2 D
gnd-A43RJ1.18-18 — 33.1_Luggage_LockUnlock:4 D
gnd-A43RJ2.2-18 — 37.1_VLink_ADryer:2 D

AE44 (I/O_EB, 24WUP): J1:6, J1:17, J1:18, J2:2, J2:3, J2:14
gnd-A44RJ1.17-18 — 26.1_Front_Lighting:4 E; 9.1_Horn:3 D
gnd-A44RJ1.18-14 — 18.4_Upper_Defrost:3 C
gnd-A44RJ2.2-18 — 19.1_Driver_Lights:3 A; 29.1_Entrance_door:4 D
gnd-A44RJ2.3-16 — 34.1_wiper_washer:3 C; 34.1_wiper_washer:4 A

AE45 (I/O_EB, 12WUP): J1:6, J1:17, J1:18, J2:2, J2:3, J2:14
gnd-A45RJ1.17-14 — 26.5_Fog_Corn_Dock_Lts:3 B

AE46 (I/O_EB, 12WUp): J1:6, J1:17, J1:18, J2:2, J2:3, J2:14
gnd-A46RJ1.17-14 — 26.1_Front_Lighting:3 C
gnd-A46RJ1.18-18 — 26.1_Front_Lighting:4 D

RH console JB

AE47 (I/O_EB, 24WUP): J1:6, J1:17, J1:18, J2:2, J2:3, J2:14
gnd-A47RJ1.6-18 — 18.1_Defroster:2 E
gnd-A47RJ1.17-14 — 18.1_Defroster:3 D
gnd-A47RJ1.18-18 — 29.1_Entrance_door:1 B; 34.1_wiper_washer:3 D
gnd-A47RJ2.2-18 — 29.1_Entrance_door:3 B
gnd-A47RJ2.3-14 — 18.4_Upper_Defrost:3 D

AE48 (I/O_EB, 12WUp): J1:6, J1:17, J1:18, J2:2, J2:3, J2:14
gnd-A48RJ1.17-14 — 26.5_Fog_Corn_Dock_Lts:3 C
gnd-A48RJ1.18-18 — 26.1_Front_Lighting:4 B
gnd-A48RJ2.2-14 — 26.1_Front_Lighting:3 A

Parcel Rack JB

AE53 (I/O_EB, 24WUp): J1:6, J1:17, J1:18, J2:2, J2:3, J2:14
gnd-A53RJ1.17-16 — 11.1_Lavatory:4 B
gnd-A53RJ1.18-16 — 20.1_Emgy_Aislelights:4 A
gnd-A53RJ2.2-14 — 18.3_Parcel_Rack_Vent:1 C
gnd-A53RJ2.3-14 — 22.2_Reading_lamps:8 E

Evaporator

AE54 (I/O_EB, 24WUp): J1:6, J1:17, J1:18, J2:2, J2:3, J2:14
gnd-A54RJ1.6-18 — 18.2_HvacPass:0 D; 18.2_HvacPass:0 C; 18.2_HvacPass:4 B
gnd-A54RJ1.17-16 — 18.3_Parcel_Rack_Vent:3 E; 18.2_HvacPass:1 A
gnd-A54RJ1.18-14 — 25.1_Cmpt_Lighting:1 A
gnd-A54RJ2.2-16 — 18.2_HvacPass:4 D; 18.2_HvacPass:3 C
gnd-A54RJ2.3-16

WCL

AE57 (I/O_EA, 24WUp): J1:6, J1:18, J2:14
gnd-A57RJ1.18-18 — 36.1_WCL_Ricon:2 B

RJB

AE49 (I/O_EB, 24WUP): J1:6, J1:17, J1:18, J2:2, J2:3, J2:14
gnd-A49RJ2.2-18 — 13.1_FanDriveElectric:1 D

AE50 (I/O_EB, 12WUP): J1:6, J1:17, J1:18, J2:2, J2:3, J2:14
gnd-A50RJ1.17-18 — 26.2_Rear_lighting:2 F
gnd-A50RJ1.18-18 — 26.2_Rear_lighting:2 B
gnd-A50RJ2.2-18 — 26.3_Backup_Warnings:2 B

AE51 (I/O_EB, 12WUp): J1:6, J1:17, J1:18, J2:2, J2:3, J2:14
gnd-A51RJ1.17-18 — 26.2_Rear_lighting:2 D
gnd-A51RJ1.18-16 — 36.1_WCL_Ricon:6 A

AE52 (I/O_EB, 24WUP): J1:6, J1:17, J1:18, J2:2, J2:3, J2:14
gnd-A52RJ1.17-16 — 11.1_Lavatory:3 E
gnd-A52RJ1.18-18 — 25.1_Cmpt_Lighting:4 B

Electronic ground distribution

Ground distribution:
0-Electric gnd
00- Electronic Gnd

A-Dash - Lh console harness
F-Front junction box harness
FH-Front harness
R-Rear junction box harness
FR-Front to rear

Dash harness

gnd-00A2-16 — 23.1_Indirect_Lights:0 B
gnd-00A2-16 — 60.0_Cust_Adapt_Dash_Interface:2 B
gnd-00A1-16 — 7.1_Mux_Power:4 B
gnd-00A-18 — 34.1_wiper_washer:0 D
gnd-00A-18 — 18.4_Upper_Defrost:1 B
gnd-00A-18 — 29.1_Entrance_door:1 E
gnd-00A-18 — 22.2_Reading_lamps:4 F
gnd-00A-18 — 41.1_Steering:1 D
gnd-00A-18 — 19.1_Driver_Lights:1 D
gnd-00A-18 — 22.2_Reading_lamps:2 F
gnd-00A-18 — 18.3_Parcel_Rack_Vent:2 B
gnd-00A-18 — 16.1_ESP:0 A
gnd-00A-18 — 10.1_Cluster:3 B
gnd-00A-18 — 14.1_Engine_Ecu:8 D
gnd-00A-18 — 26.1_Front_Lighting:0 D
gnd-00A-18 — 12.1_Brake:2 B
gnd-00A-18 — 36.1_WCL_Ricon:3 A
gnd-00A-18 — 28.2_OLD_Destination_Signs:1 B
gnd-00A-18 — 26.1_Front_Lighting:0 A
gnd-00A-18 — 26.5_Fog_Corn_Dock_Lts:1 B
gnd-00A-18 — 26.1_Front_Lighting:1 E
gnd-00A-18 — 6.2_Network:4 C
gnd-00A-18 — 28.1_Dig_Clock_&_B-Up_Cam:2 D

gnd-00A2-14
gnd-00A1-16 — C71:4
gnd-00A-14 — C71:5

Lh console harness

C171:16
gnd-00A-16 — 9.1_Horn:1 D
gnd-00A-18 — 12.2_Trailler_ParkBrake:2 B
gnd-00A-18 — 14.1_Engine_Ecu:8 C
gnd-00A-18 — 17.1_Pre_Heat:1 D
gnd-00A-18 — 32.1_Kneeling:1 B
gnd-00A-18 — 33.1_Luggage_LockUnlock:1 B
gnd-00A-18 — 31.1_Mirror:1 A
gnd-00A-18 — 30.1_Drivers_Window:1 C
gnd-00A-18 — 32.1_Kneeling:1 D
gnd-00A-18 — 32.1_Kneeling:1 D

Front harness

gnd-00FH-14
gnd-00FH-18 — 34.1_wiper_washer:0 B
gnd-00FH-18 — 12.1_Brake:2 D
gnd-00FH-18 — 32.1_Kneeling:1 E
gnd-00FH1-12 — 18.1_Defroster:3 B
gnd-00FH2-10 — 7.1_Mux_Power:2 B
gnd-00FH2-10 — 7.1_Mux_Power:2 C

1/4

FJB harness

gnd-00F1-12 — 7.1_Mux_Power:1 D
gnd-00F1-12 — 7.1_Mux_Power:1 C
gnd-00F2-12 — 7.1_Mux_Power:1 D
gnd-00F2-12 — 7.1_Mux_Power:1 E
gnd-00F2-16 — 7.1_Mux_Power:1 B

gnd-00F-12
gnd-00F-18 — 12.2_Trailler_ParkBrake:2 B
gnd-00F-18 — 14.1_Engine_Ecu:5 C
gnd-00F-18 — 15.2_Trans_IShift:3 C
gnd-00F-18 — 42.4_ELD_ITS_Gateway:5 C
gnd-00F-18 — 15.2_Trans_IShift:1 D
gnd-00F-14 — 16.1_ESP:2 B
gnd-00F-18 — 30.2_Outlet_12v:1 B
gnd-00F-18 — 4.1_Dist_12V_FJB:2 C
gnd-00F-18 — 28.1_Dig_Clock_&_B-Up_Cam:2 B
gnd-00F-16 — 9.1_Horn:3 B
gnd-00F-18 — 37.2_SteeringCtrl:2 B
gnd-00F-18 — 38.1_Fire_Supp:0 C
gnd-00F-18 — 38.1_Fire_Supp:2 D
gnd-00F-18 — 4.1_Dist_12V_FJB:4 A
gnd-00F-18 — 4.1_Dist_12V_FJB:4 B
gnd-00F-18 — 9.1_Horn:1 A

FJB Electronic GND

gnd-00FR-1

RJB harness

gnd-00R1-18 — 1.2_Alternators:2 D
gnd-00R1-18 — 3.2_Ign_Start:1 C
gnd-00R1-18 — 3.1_Main_Disti:2 A
gnd-00R1-18 — 6.2_Network:1 B
gnd-00R1-18 — 11.1_Lavatory:1 B
gnd-00R1-14 — 15.2_Trans_IShift:2 A
gnd-00R1-14 — 15.1_Trans_Allison:0 A
gnd-00R1-14 — 17.1_Pre_Heat:3 E
gnd-00R1-16 — 38.1_Fire_Supp:2 C
gnd-00R1-18 — 12.1_Brake:2 C
gnd-00R1-18 — 14.1_Engine_Ecu:3 A

gnd-00R1-10
C17:2
gnd-00R2-10 — 7.1_Mux_Power:2 E
gnd-00R2-12 — 7.1_Mux_Power:2 D
gnd-00R3-12 — 7.1_Mux_Power:4 C
gnd-00R3-12 — 7.1_Mux_Power:4 D
gnd-00R4-12 — 7.1_Mux_Power:4 D
gnd-00R4-12 — 7.1_Mux_Power:4 E
C17:92
gnd-00R4-16 — 7.1_Mux_Power:4 B

gnd-00R5-8
gnd-00R5-14 — 14.2_Urea:1 B
gnd-00R5-12 — 14.1_Engine_Ecu:3 C
gnd-00R5-18 — 26.4_Trailer:1 D
gnd-00VA-2 — 1.1_batteries:0 C

RJB Electronic GND

gnd-_00-1/0 — 1.1_batteries:2 C

Dash JB

AE55 (I/O_EA, 12WUP): J1:6, J1:18, J2:14
gnd-A55RJ1.18-18 — 41.1_Steering:2 B

AE56 (I/O_EA, 24WUP): J1:6, J1:18, J2:14
gnd-A56RJ1.18-18 — 27.1_Window_Ajar:3 C

FJB

AE41 (I/O_EA, 24WUP): J1:6, J1:18, J2:14
gnd-A41RJ1.6-18 — 32.1_Kneeling:4 E
gnd-A41RJ1.18-18 — 25.1_Cmpt_Lighting:1 D; 29.1_Entrance_door:4 E
gnd-A41RJ2.14-18 — 11.1_Lavatory:4 D

AE42 (I/O_EA, 24WUP): J1:6, J1:18, J2:14
gnd-A42RJ2.18-18 — 32.1_Kneeling:4 D
gnd-A42RJ2.14-18 — 32.1_Kneeling:1 C

AE43 (I/O_EB, 12WUP): J1:5, J1:6, J1:17, J1:18, J2:2, J2:3, J2:14
gnd-A43RJ1.17-18 — 39.1_TPMS_ACB:0 A; 39.1_TPMS_ACB:2 E
gnd-A43RJ1.18-18 — 33.1_Luggage_LockUnlock:4 D
gnd-A43RJ2.2-18 — 37.1_VLink_ADryer:2 D

AE44 (I/O_EB, 24WUP): J1:5, J1:6, J1:17, J1:18, J2:2, J2:3, J2:14
gnd-A44RJ1.17-18 — 26.1_Front_Lighting:4 E; 9.1_Horn:3 D
gnd-A44RJ1.18-14 — 18.4_Upper_Defrost:3 C
gnd-A44RJ2.2-18 — 19.1_Driver_Lights:3 A; 29.1_Entrance_door:4 D
gnd-A44RJ2.3-16 — 34.1_wiper_washer:3 C; 34.1_wiper_washer:4 A

AE45 (I/O_EB, 12WUP): J1:5, J1:6, J1:17, J1:18, J2:2, J2:3, J2:14
gnd-A45RJ1.17-14 — 26.5_Fog_Corn_Dock_Lts:3 B

AE46 (I/O_EB, 12WUp): J1:5, J1:6, J1:17, J1:18, J2:2, J2:3, J2:14
gnd-A46RJ1.17-14 — 26.1_Front_Lighting:3 C
gnd-A46RJ1.18-18 — 26.1_Front_Lighting:4 D

RH console JB

AE47 (I/O_EB, 24WUP): J1:5, J1:6, J1:17, J1:18, J2:2, J2:3, J2:14
gnd-A47RJ1.6-18 — 18.1_Defroster:2 E
gnd-A47RJ1.17-14 — 18.1_Defroster:3 D
gnd-A47RJ1.18-18 — 29.1_Entrance_door:1 B; 34.1_wiper_washer:3 D
gnd-A47RJ2.2-18 — 29.1_Entrance_door:3 B
gnd-A47RJ2.3-14 — 18.4_Upper_Defrost:3 D

AE48 (I/O_EB, 12WUp): J1:5, J1:6, J1:17, J1:18, J2:2, J2:3, J2:14
gnd-A48RJ1.17-14 — 26.5_Fog_Corn_Dock_Lts:3 C
gnd-A48RJ1.18-18 — 26.1_Front_Lighting:4 B
gnd-A48RJ2.2-14 — 26.1_Front_Lighting:3 A

Parcel Rack JB

AE53 (I/O_EB, 24WUp): J1:5, J1:6, J1:17, J1:18, J2:2, J2:3, J2:14
gnd-A53RJ1.17-16 — 11.1_Lavatory:4 B
gnd-A53RJ1.18-16 — 20.1_Emgy_Aislelights:4 A
gnd-A53RJ2.2-14 — 18.3_Parcel_Rack_Vent:1 C
gnd-A53RJ2.3-14 — 22.2_Reading_lamps:8 E

Evaporator

AE54 (I/O_EB, 24WUp): J1:5, J1:6, J1:17, J1:18, J2:2, J2:3, J2:14
gnd-A54RJ1.6-18 — 18.2_HvacPass:0 D; 18.2_HvacPass:0 C; 18.2_HvacPass:4 B
gnd-A54RJ1.17-16
gnd-A54RJ1.18-14 — 18.3_Parcel_Rack_Vent:3 E; 18.2_HvacPass:1 A
gnd-A54RJ2.2-16 — 25.1_Cmpt_Lighting:1 A; 18.2_HvacPass:4 D
gnd-A54RJ2.3-16 — 18.2_HvacPass:3 C

WCL

AE57 (I/O_EA, 24WUp): J1:6, J1:18, J2:14
gnd-A57RJ1.18-18 — 36.1_WCL_Ricon:2 B

RJB

AE49 (I/O_EB, 24WUP): J1:5, J1:6, J1:17, J1:18, J2:2, J2:3, J2:14
gnd-A49RJ2.2-18 — 13.1_FanDriveElectric:1 D

AE50 (I/O_EB, 12WUP): J1:5, J1:6, J1:17, J1:18, J2:2, J2:3, J2:14
gnd-A50RJ1.17-18 — 26.2_Rear_lighting:2 F
gnd-A50RJ1.18-18 — 26.2_Rear_lighting:2 B
gnd-A50RJ2.2-18 — 26.3_Backup_Warnings:2 B

AE51 (I/O_EB, 12WUp): J1:5, J1:6, J1:17, J1:18, J2:2, J2:3, J2:14
gnd-A51RJ1.17-18 — 26.2_Rear_lighting:2 D
gnd-A51RJ1.18-16 — 36.1_WCL_Ricon:6 A

AE52 (I/O_EB, 24WUP): J1:5, J1:6, J1:17, J1:18, J2:2, J2:3, J2:14
gnd-A52RJ1.17-16 — 11.1_Lavatory:3 E
gnd-A52RJ1.18-18 — 25.1_Cmpt_Lighting:4 B

Electronic ground distribution

Ground distribution:
0-Electric gnd
00- Electronic Gnd

A-Dash - Lh console harness
F-Front junction box harness
FH-Front harness
R-Rear junction box harness
FR-Front to rear

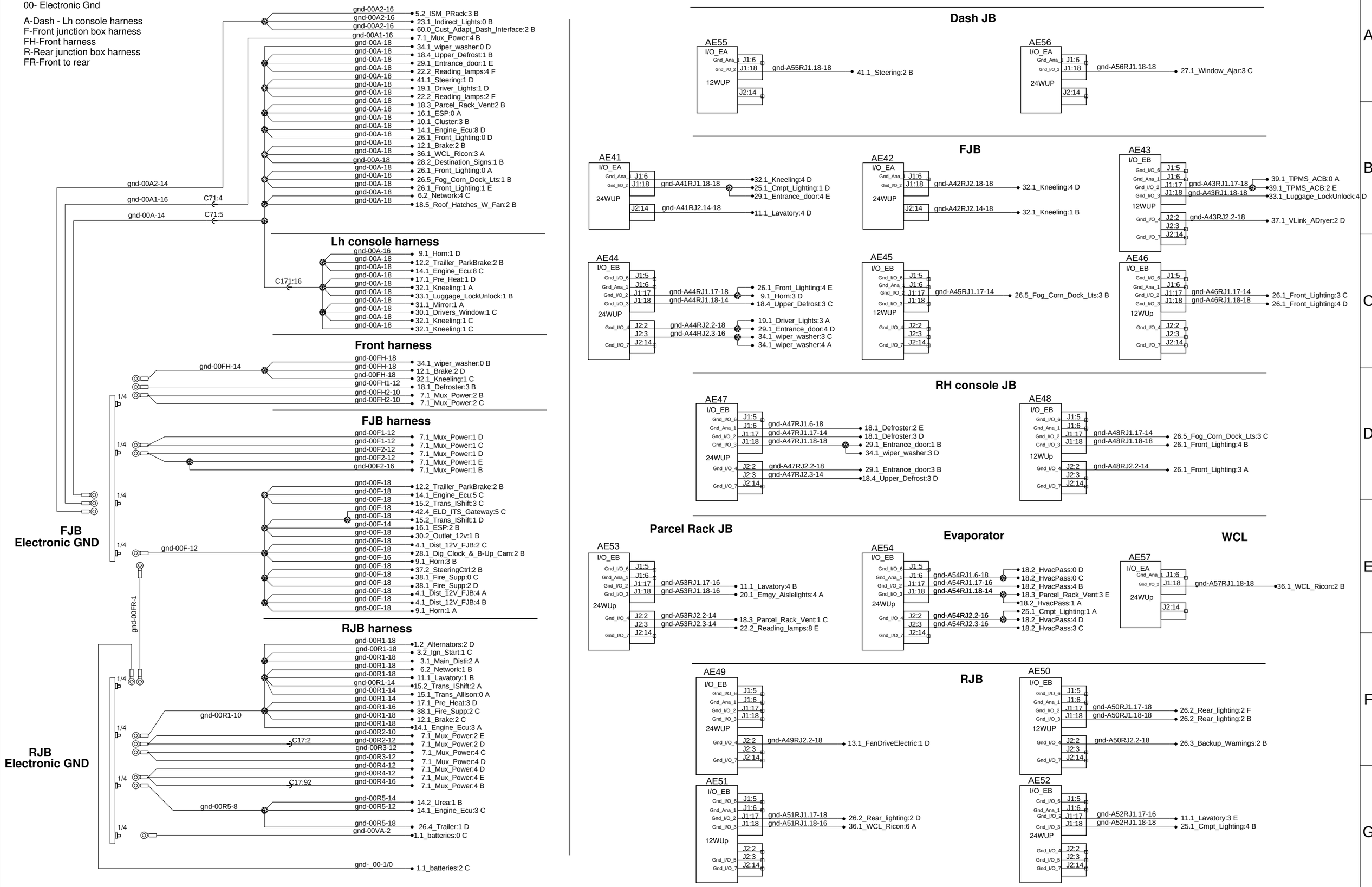

PREVOST®	WIRING DIAGRAM	No:D061640	Page:2.1	Rev:11

Electronic ground distribution

Ground distribution:
0-Electric gnd
00- Electronic Gnd

A-Dash - Lh console harness
F-Front junction box harness
FH-Front harness
R-Rear junction box harness
FR-Front to rear

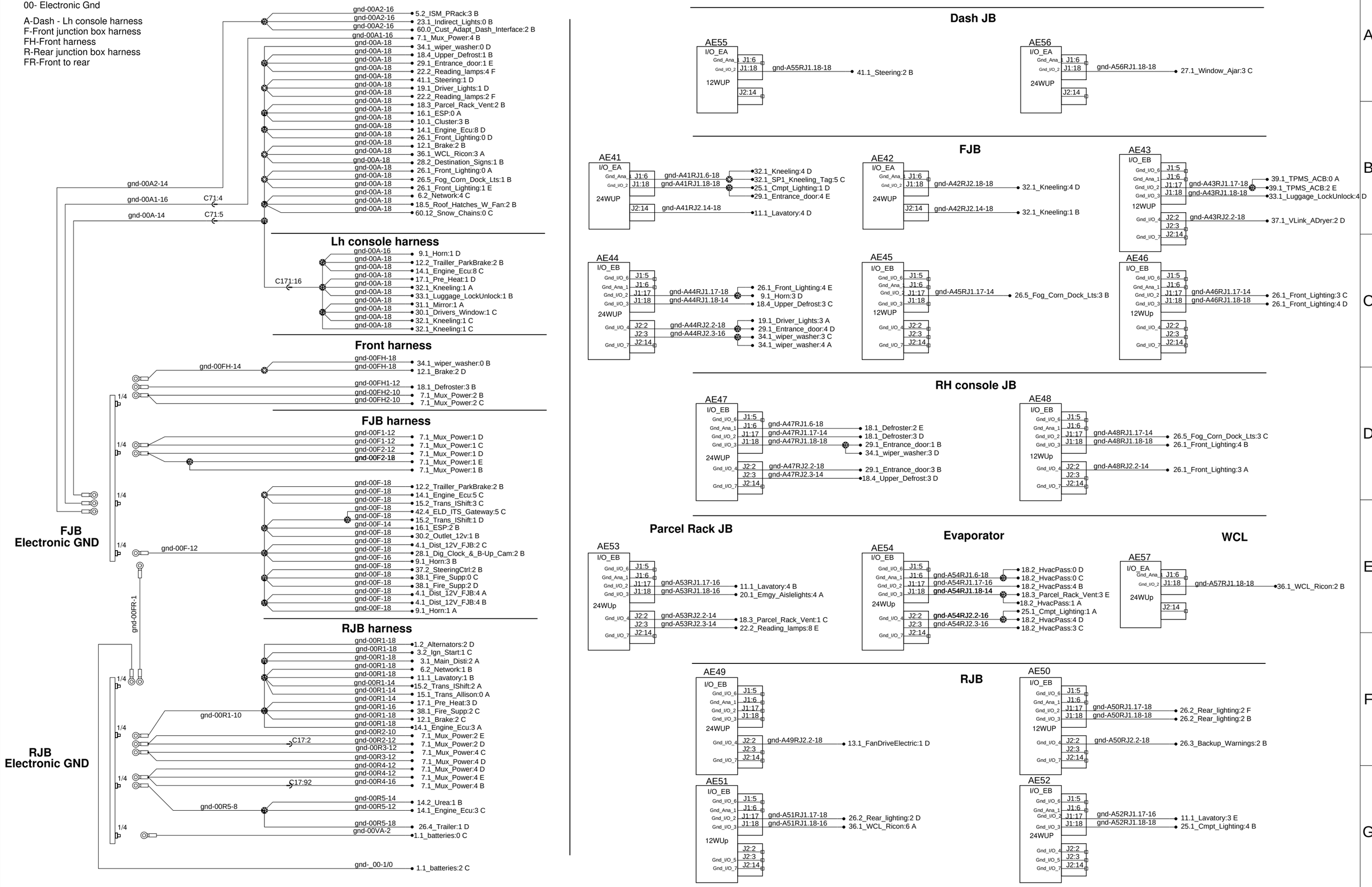

PREVOST®	WIRING DIAGRAM	No:D061640	Page:2.1	Rev:12

Electronic ground distribution

Ground distribution:
0-Electric gnd
00- Electronic Gnd

A-Dash - Lh console harness
F-Front junction box harness
FH-Front harness
R-Rear junction box harness
FR-Front to rear

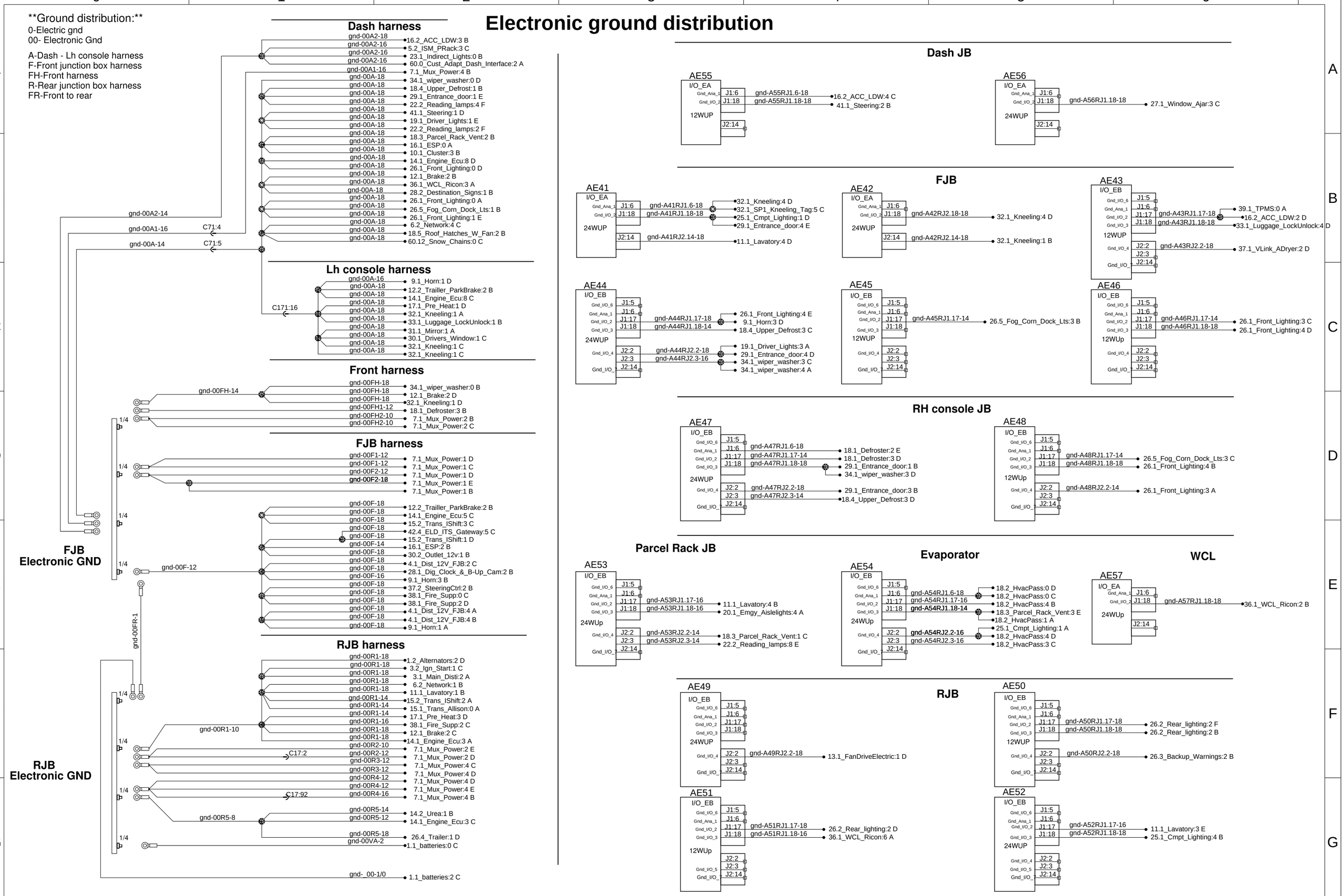

PREVOST®	WIRING DIAGRAM	No:D061640	Page:2.1	Rev:15

Electronic ground distribution

Ground distribution:
0-Electric gnd
00- Electronic Gnd

A-Dash - Lh console harness
F-Front junction box harness
FH-Front harness
R-Rear junction box harness
FR-Front to rear

Dash harness

gnd-00A2-18 • 16.2_ACC_LDW:3 B
gnd-00A2-16 • 5.2_ISM_PRack:3 C
gnd-00A2-16 • 23.1_Indirect_Lights:0 B
gnd-00A2-16 • 60.0_Cust_Adapt_Dash_Interface:2 A
gnd-00A1-16 • 7.1_Mux_Power:4 B
gnd-00A-18 • 34.1_wiper_washer:0 D
gnd-00A-18 • 18.4_Upper_Defrost:1 B
gnd-00A-18 • 29.1_Entrance_door:1 E
gnd-00A-18 • 22.2_Reading_lamps:4 F
gnd-00A-18 • 41.1_Steering:1 D
gnd-00A-18 • 19.1_Driver_Lights:1 E
gnd-00A-18 • 22.2_Reading_lamps:2 F
gnd-00A-18 • 18.3_Parcel_Rack_Vent:2 B
gnd-00A-18 • 16.1_ESP:0 A
gnd-00A-18 • 10.1_Cluster:3 B
gnd-00A-18 • 14.1_Engine_Ecu:8 D
gnd-00A-18 • 26.1_Front_Lighting:0 D
gnd-00A-18 • 12.1_Brake:2 B
gnd-00A-18 • 36.1_WCL_Ricon:3 A
gnd-00A-18 • 28.2_Destination_Signs:1 B
gnd-00A-18 • 26.1_Front_Lighting:0 A
gnd-00A-18 • 26.5_Fog_Corn_Dock_Lts:1 B
gnd-00A-18 • 26.1_Front_Lighting:1 E
gnd-00A-18 • 6.2_Network:4 C
gnd-00A-18 • 18.5_Roof_Hatches_W_Fan:2 B
gnd-00A-18 • 60.12_Snow_Chains:0 C
gnd-00A-18 • 45.0_Emergency_Light:1 C

gnd-00A2-14
gnd-00A1-16 — C71:4
gnd-00A-14 — C71:5

Lh console harness

C171:16

gnd-00A-16 • 9.1_Horn:1 D
gnd-00A-18 • 12.2_Trailler_ParkBrake:2 B
gnd-00A-18 • 14.1_Engine_Ecu:8 C
gnd-00A-18 • 17.1_Pre_Heat:1 D
gnd-00A-18 • 32.1_Kneeling:1 A
gnd-00A-18 • 33.1_Luggage_LockUnlock:1 B
gnd-00A-18 • 31.1_Mirror:1 A
gnd-00A-18 • 30.1_Drivers_Window:1 C
gnd-00A-18 • 32.1_Kneeling:1 C
gnd-00A-18 • 32.1_Kneeling:1 C

Front harness

gnd-00FH-14

gnd-00FH-18 • 34.1_wiper_washer:0 B
gnd-00FH-18 • 12.1_Brake:2 D
gnd-00FH-18 • 32.1_Kneeling:1 D
gnd-00FH1-12 • 18.1_Defroster:3 B
gnd-00FH2-10 • 7.1_Mux_Power:2 B
gnd-00FH2-10 • 7.1_Mux_Power:2 C

1/4

FJB harness

gnd-00F1-12 • 7.1_Mux_Power:1 D
gnd-00F1-12 • 7.1_Mux_Power:1 C
gnd-00F2-12 • 7.1_Mux_Power:1 D
gnd-00F2-18 • 7.1_Mux_Power:1 E
7.1_Mux_Power:1 B

1/4

gnd-00F-18 • 12.2_Trailler_ParkBrake:2 B
gnd-00F-18 • 14.1_Engine_Ecu:5 C
gnd-00F-18 • 15.2_Trans_IShift:3 C
gnd-00F-18 • 42.4_ELD_ITS_Gateway:5 C
gnd-00F-18 • 15.2_Trans_IShift:1 D
gnd-00F-14 • 16.1_ESP:2 B
gnd-00F-18 • 30.2_Outlet_12v:1 B
gnd-00F-18 • 4.1_Dist_12V_FJB:2 C
gnd-00F-18 • 28.1_Dig_Clock_&_B-Up_Cam:2 B
gnd-00F-16 • 9.1_Horn:3 B
gnd-00F-18 • 37.2_SteeringCtrl:2 B
gnd-00F-18 • 38.1_Fire_Supp:0 C
gnd-00F-18 • 38.1_Fire_Supp:2 D
gnd-00F-18 • 4.1_Dist_12V_FJB:4 A
gnd-00F-18 • 4.1_Dist_12V_FJB:4 B
gnd-00F-18 • 9.1_Horn:1 A

1/4 — gnd-00F-12

FJB Electronic GND

gnd-00FR-1

RJB harness

gnd-00R1-18 • 1.2_Alternators:2 D
gnd-00R1-18 • 3.2_Ign_Start:1 C
gnd-00R1-18 • 3.1_Main_Disti:2 A
gnd-00R1-18 • 6.2_Network:1 B
gnd-00R1-18 • 11.1_Lavatory:1 B
gnd-00R1-14 • 15.2_Trans_IShift:2 A
gnd-00R1-14 • 15.1_Trans_Allison:0 A
gnd-00R1-14 • 17.1_Pre_Heat:3 D
gnd-00R1-16 • 38.1_Fire_Supp:2 C
gnd-00R1-18 • 12.1_Brake:2 C
gnd-00R1-18 • 14.1_Engine_Ecu:3 A

1/4 — gnd-00R1-10

gnd-00R2-10 • 7.1_Mux_Power:2 E
C17:2 — gnd-00R2-12 • 7.1_Mux_Power:2 D
gnd-00R3-12 • 7.1_Mux_Power:4 C
gnd-00R3-12 • 7.1_Mux_Power:4 D
gnd-00R4-12 • 7.1_Mux_Power:4 D
gnd-00R4-12 • 7.1_Mux_Power:4 E
C17:92 — gnd-00R4-16 • 7.1_Mux_Power:4 B

1/4

gnd-00R5-8

gnd-00R5-14 • 14.2_Urea:1 B
gnd-00R5-12 • 14.1_Engine_Ecu:3 C

gnd-00R5-18 • 26.4_Trailer:1 D
gnd-00VA-2 • 1.1_batteries:0 C

1/4

RJB Electronic GND

gnd-_00-1/0 • 1.1_batteries:2 C

Dash JB

AE55 (I/O_EA, 12WUP)
J1:6 — gnd-A55RJ1.6-18 • 16.2_ACC_LDW:4 C
J1:18 — gnd-A55RJ1.18-18 • 41.1_Steering:2 B
J2:14

AE56 (I/O_EA, 24WUP)
J1:6
J1:18 — gnd-A56RJ1.18-18 • 27.1_Window_Ajar:3 C
J2:14

FJB

AE41 (I/O_EA, 24WUP)
J1:6 — gnd-A41RJ1.6-18 • 32.1_Kneeling:4 D
J1:18 — gnd-A41RJ1.18-18 • 32.1_SP1_Kneeling_Tag:5 C
• 25.1_Cmpt_Lighting:1 D
• 29.1_Entrance_door:4 E
J2:14 — gnd-A41RJ2.14-18 • 11.1_Lavatory:4 D

AE42 (I/O_EA, 24WUP)
J1:6
J1:18 — gnd-A42RJ2.18-18 • 32.1_Kneeling:4 D
J2:14 — gnd-A42RJ2.14-18 • 32.1_Kneeling:1 B

AE43 (I/O_EB, 12WUP)
J1:5
J1:6
J1:17 — gnd-A43RJ1.17-18 • 39.1_TPMS:0 A
• 16.2_ACC_LDW:2 D
J1:18 — gnd-A43RJ1.18-18 • 33.1_Luggage_LockUnlock:4 D
J2:2 — gnd-A43RJ2.2-18 • 37.1_VLink_ADryer:2 D
J2:3
J2:14

AE44 (I/O_EB, 24WUP)
J1:5
J1:6
J1:17 — gnd-A44RJ1.17-18 • 26.1_Front_Lighting:4 E
• 9.1_Horn:3 D
J1:18 — gnd-A44RJ1.18-14 • 18.4_Upper_Defrost:3 C
J2:2 — gnd-A44RJ2.2-18 • 19.1_Driver_Lights:3 A
• 29.1_Entrance_door:4 D
J2:3 — gnd-A44RJ2.3-16 • 34.1_wiper_washer:3 C
• 34.1_wiper_washer:4 A
J2:14

AE45 (I/O_EB, 12WUP)
J1:5
J1:6
J1:17 — gnd-A45RJ1.17-14 • 26.5_Fog_Corn_Dock_Lts:3 B
J1:18
J2:2
J2:3
J2:14

AE46 (I/O_EB, 12WUp)
J1:5
J1:6
J1:17 — gnd-A46RJ1.17-14 • 26.1_Front_Lighting:3 C
J1:18 — gnd-A46RJ1.18-18 • 26.1_Front_Lighting:4 D
J2:2
J2:3
J2:14

RH console JB

AE47 (I/O_EB, 24WUP)
J1:5
J1:6 — gnd-A47RJ1.6-18 • 18.1_Defroster:2 E
J1:17 — gnd-A47RJ1.17-14 • 18.1_Defroster:3 D
J1:18 — gnd-A47RJ1.18-18 • 29.1_Entrance_door:1 B
• 34.1_wiper_washer:3 D
J2:2 — gnd-A47RJ2.2-18 • 29.1_Entrance_door:3 B
J2:3 — gnd-A47RJ2.3-14 • 18.4_Upper_Defrost:3 D
J2:14

AE48 (I/O_EB, 12WUp)
J1:5
J1:6
J1:17 — gnd-A48RJ1.17-14 • 26.5_Fog_Corn_Dock_Lts:3 C
J1:18 — gnd-A48RJ1.18-18 • 26.1_Front_Lighting:4 B
J2:2 — gnd-A48RJ2.2-14 • 26.1_Front_Lighting:3 A
J2:3
J2:14

Parcel Rack JB

AE53 (I/O_EB, 24WUp)
J1:5
J1:6
J1:17 — gnd-A53RJ1.17-16 • 11.1_Lavatory:4 B
J1:18 — gnd-A53RJ1.18-16 • 20.1_Emgy_Aislelights:4 A
J2:2 — gnd-A53RJ2.2-14 • 18.3_Parcel_Rack_Vent:1 C
J2:3 — gnd-A53RJ2.3-14 • 22.2_Reading_lamps:8 E
J2:14

Evaporator

AE54 (I/O_EB, 24WUp)
J1:5
J1:6 — gnd-A54RJ1.6-18 • 18.2_HvacPass:0 D
J1:17 — gnd-A54RJ1.17-16 • 18.2_HvacPass:0 C
J1:18 — gnd-A54RJ1.18-14 • 18.2_HvacPass:4 B
• 18.3_Parcel_Rack_Vent:3 E
• 18.2_HvacPass:1 A
J2:2 — gnd-A54RJ2.2-16 • 25.1_Cmpt_Lighting:1 A
J2:3 — gnd-A54RJ2.3-16 • 18.2_HvacPass:4 D
J2:14 • 18.2_HvacPass:3 C

WCL

AE57 (I/O_EA, 24WUp)
J1:6
J1:18 — gnd-A57RJ1.18-18 • 36.1_WCL_Ricon:2 B
J2:14

RJB

AE49 (I/O_EB, 24WUP)
J1:5
J1:6
J1:17
J1:18
J2:2 — gnd-A49RJ2.2-18 • 13.1_FanDriveElectric:1 D
J2:3
J2:14

AE50 (I/O_EB, 12WUP)
J1:5
J1:6
J1:17 — gnd-A50RJ1.17-18 • 26.2_Rear_lighting:2 F
J1:18 — gnd-A50RJ1.18-18 • 26.2_Rear_lighting:2 B
J2:2 — gnd-A50RJ2.2-18 • 26.3_Backup_Warnings:2 B
J2:3
J2:14

AE51 (I/O_EB, 12WUp)
J1:5
J1:6
J1:17 — gnd-A51RJ1.17-18 • 26.2_Rear_lighting:2 D
J1:18 — gnd-A51RJ1.18-16 • 36.1_WCL_Ricon:6 A
J2:2
J2:3
J2:14

AE52 (I/O_EB, 24WUP)
J1:5
J1:6
J1:17 — gnd-A52RJ1.17-16 • 11.1_Lavatory:3 E
J1:18 — gnd-A52RJ1.18-18 • 25.1_Cmpt_Lighting:4 B
J2:2
J2:3
J2:14

PREVOST®	WIRING DIAGRAM	No:D061640	Page:2.1	Rev:16

Electronic ground distribution

Ground distribution:
0-Electric gnd
00- Electronic Gnd

A-Dash - Lh console harness
F-Front junction box harness
FH-Front harness
R-Rear junction box harness
FR-Front to rear

Dash harness

gnd-00A2-16 → 23.1_Indirect_Lights:0 B
gnd-00A2-16 → 60.0_Cust_Adapt_Dash_Interface:2 B
gnd-00A1-16 → 7.1_Mux_Power:4 B
gnd-00A-18 → 34.1_wiper_washer:0 D
gnd-00A-18 → 18.4_Upper_Defrost:1 B
gnd-00A-18 → 29.1_Entrance_door:1 E
gnd-00A-18 → 22.2_Reading_lamps:4 F
gnd-00A-18 → 41.1_Steering:1 D
gnd-00A-18 → 19.1_Driver_Lights:1 D
gnd-00A-18 → 22.2_Reading_lamps:2 F
gnd-00A-18 → 18.3_Parcel_Rack_Vent:2 B
gnd-00A-18 → 16.1_ESP:0 A
gnd-00A-18 → 10.1_Cluster:3 B
gnd-00A-18 → 14.1_Engine_Ecu:8 D
gnd-00A-18 → 26.1_Front_Lighting:0 D
gnd-00A-18 → 12.1_Brake:2 B
gnd-00A-18 → 36.1_WCL_Ricon:3 A
gnd-00A-18 → 28.2_OLD_Destination_Signs:1 B
gnd-00A-18 → 26.1_Front_Lighting:0 A
gnd-00A-18 → 26.5_Fog_Corn_Dock_Lts:1 B
gnd-00A-18 → 26.1_Front_Lighting:1 E
gnd-00A-18 → 6.2_Network:4 C
gnd-00A-18 → 28.1_Dig_Clock_&_B-Up_Cam:2 D

gnd-00A2-14
gnd-00A1-16 — C71:4
gnd-00A-14 — C71:5

Lh console harness

C171:16
gnd-00A-16 → 9.1_Horn:1 D
gnd-00A-18 → 12.2_Trailler_ParkBrake:2 B
gnd-00A-18 → 14.1_Engine_Ecu:8 C
gnd-00A-18 → 17.1_Pre_Heat:1 D
gnd-00A-18 → 32.1_Kneeling:1 B
gnd-00A-18 → 33.1_Luggage_LockUnlock:1 B
gnd-00A-18 → 31.1_Mirror:1 A
gnd-00A-18 → 30.1_Drivers_Window:1 C
gnd-00A-18 → 32.1_Kneeling:1 D
gnd-00A-18 → 32.1_Kneeling:1 D

Front harness

gnd-00FH-14
gnd-00FH-18 → 34.1_wiper_washer:0 B
gnd-00FH-18 → 12.1_Brake:2 D
gnd-00FH-18 → 32.1_Kneeling:1 E
gnd-00FH1-12 → 18.1_Defroster:3 B
gnd-00FH2-10 → 7.1_Mux_Power:2 B
gnd-00FH2-10 → 7.1_Mux_Power:2 C

1/4

FJB harness

gnd-00F1-12 → 7.1_Mux_Power:1 D
gnd-00F1-12 → 7.1_Mux_Power:1 C
gnd-00F2-12 → 7.1_Mux_Power:1 D
gnd-00F2-12 → 7.1_Mux_Power:1 E
gnd-00F2-16 → 7.1_Mux_Power:1 B

1/4

gnd-00F-12
gnd-00F-18 → 12.2_Trailler_ParkBrake:2 B
gnd-00F-18 → 14.1_Engine_Ecu:5 C
gnd-00F-18 → 15.2_Trans_IShift:3 C
gnd-00F-18 → 42.4_ELD_ITS_Gateway:5 C
gnd-00F-18 → 15.2_Trans_IShift:1 D
gnd-00F-14 → 16.1_ESP:2 B
gnd-00F-18 → 30.2_Outlet_12v:1 B
gnd-00F-18 → 4.1_Dist_12V_FJB:2 C
gnd-00F-18 → 28.1_Dig_Clock_&_B-Up_Cam:2 B
gnd-00F-16 → 9.1_Horn:3 B
gnd-00F-18 → 37.2_SteeringCtrl:2 B
gnd-00F-18 → 38.1_Fire_Supp:0 C
gnd-00F-18 → 38.1_Fire_Supp:2 D
gnd-00F-18 → 4.1_Dist_12V_FJB:4 A
gnd-00F-18 → 4.1_Dist_12V_FJB:4 B
gnd-00F-18 → 9.1_Horn:1 A

1/4

FJB Electronic GND

gnd-00FR-1

RJB harness

gnd-00R1-18 → 1.1_SP1_Alternators_Remy:2 C
gnd-00R1-18 → 3.2_Ign_Start:1 C
gnd-00R1-18 → 3.1_Main_Disti:1 A
gnd-00R1-18 → 6.2_Network:1 B
gnd-00R1-18 → 11.1_Lavatory:1 B
gnd-00R1-14 → 15.2_Trans_IShift:2 A
gnd-00R1-14 → 15.1_Trans_Allison:0 A
gnd-00R1-14 → 17.1_Pre_Heat:3 E
gnd-00R1-16 → 38.1_Fire_Supp:2 C
gnd-00R1-18 → 12.1_Brake:2 C
gnd-00R1-18 → 14.1_Engine_Ecu:3 A

gnd-00R1-10

C17:2
gnd-00R2-10 → 7.1_Mux_Power:2 E
gnd-00R2-12 → 7.1_Mux_Power:2 D
gnd-00R3-12 → 7.1_Mux_Power:4 C
gnd-00R3-12 → 7.1_Mux_Power:4 D
gnd-00R4-12 → 7.1_Mux_Power:4 D
gnd-00R4-12 → 7.1_Mux_Power:4 E
C17:92
gnd-00R4-16 → 7.1_Mux_Power:4 B

gnd-00R5-8
gnd-00R5-14 → 14.2_Urea:1 B
gnd-00R5-12 → 14.1_Engine_Ecu:3 C

gnd-00R5-18 → 26.4_Trailer:1 D
gnd-00VA-2 → 1.1_batteries:0 C

1/4

RJB Electronic GND

gnd-_00-1/0 → 1.1_batteries:3 C

Dash JB

AE55 (I/O_EA, 12WUP): J1:6, J1:18, J2:14
gnd-A55RJ1.18-18 → 41.1_Steering:2 B

AE56 (I/O_EA, 24WUP): J1:6, J1:18, J2:14
gnd-A56RJ1.18-18 → 27.1_Window_Ajar:3 C

FJB

AE41 (I/O_EA, 24WUP): J1:6, J1:18, J2:14
gnd-A41RJ1.6-18 → 32.1_Kneeling:4 E
gnd-A41RJ1.18-18 → 25.1_Cmpt_Lighting:1 D, 29.1_Entrance_door:4 E
gnd-A41RJ2.14-18 → 11.1_Lavatory:4 D

AE42 (I/O_EA, 24WUP): J1:6, J1:18, J2:14
gnd-A42RJ2.18-18 → 32.1_Kneeling:4 D
gnd-A42RJ2.14-18 → 32.1_Kneeling:1 C

AE43 (I/O_EB, 12WUP): J1:6, J1:17, J1:18, J2:2, J2:3, J2:14
gnd-A43RJ1.17-18 → 39.1_TPMS_ACB:0 A, 39.1_TPMS_ACB:2 E
gnd-A43RJ1.18-18 → 33.1_Luggage_LockUnlock:4 D
gnd-A43RJ2.2-18 → 37.1_VLink_ADryer:2 D

AE44 (I/O_EB, 24WUP): J1:6, J1:17, J1:18, J2:2, J2:3, J2:14
gnd-A44RJ1.17-18 → 26.1_Front_Lighting:4 E, 9.1_Horn:3 D
gnd-A44RJ1.18-14 → 18.4_Upper_Defrost:3 C
gnd-A44RJ2.2-18 → 19.1_Driver_Lights:3 A, 29.1_Entrance_door:4 D
gnd-A44RJ2.3-16 → 34.1_wiper_washer:3 C, 34.1_wiper_washer:4 A

AE45 (I/O_EB, 12WUP): J1:6, J1:17, J1:18, J2:2, J2:3, J2:14
gnd-A45RJ1.17-14 → 26.5_Fog_Corn_Dock_Lts:3 B

AE46 (I/O_EB, 12WUp): J1:6, J1:17, J1:18, J2:2, J2:3, J2:14
gnd-A46RJ1.17-14 → 26.1_Front_Lighting:3 C
gnd-A46RJ1.18-18 → 26.1_Front_Lighting:4 D

RH console JB

AE47 (I/O_EB, 24WUP): J1:6, J1:17, J1:18, J2:2, J2:3, J2:14
gnd-A47RJ1.6-18 → 18.1_Defroster:2 E
gnd-A47RJ1.17-14 → 18.1_Defroster:3 D
gnd-A47RJ1.18-18 → 29.1_Entrance_door:1 B, 34.1_wiper_washer:3 D
gnd-A47RJ2.2-18 → 29.1_Entrance_door:3 B
gnd-A47RJ2.3-14 → 18.4_Upper_Defrost:3 D

AE48 (I/O_EB, 12WUp): J1:6, J1:17, J1:18, J2:2, J2:3, J2:14
gnd-A48RJ1.17-14 → 26.5_Fog_Corn_Dock_Lts:3 C
gnd-A48RJ1.18-18 → 26.1_Front_Lighting:4 B
gnd-A48RJ2.2-14 → 26.1_Front_Lighting:3 A

Parcel Rack JB

AE53 (I/O_EB, 24WUp): J1:6, J1:17, J1:18, J2:2, J2:3, J2:14
gnd-A53RJ1.17-16 → 11.1_Lavatory:4 B
gnd-A53RJ1.18-16 → 20.1_Emgy_Aislelights:4 A
gnd-A53RJ2.2-14 → 18.3_Parcel_Rack_Vent:1 C
gnd-A53RJ2.3-14 → 22.2_Reading_lamps:8 E

Evaporator

AE54 (I/O_EB, 24WUp): J1:6, J1:17, J1:18, J2:2, J2:3, J2:14
gnd-A54RJ1.6-18 → 18.2_HvacPass:0 D, 18.2_HvacPass:0 C, 18.2_HvacPass:4 B
gnd-A54RJ1.17-16 → 18.3_Parcel_Rack_Vent:3 E
gnd-A54RJ1.18-14 → 18.2_HvacPass:1 A
gnd-A54RJ2.2-16 → 25.1_Cmpt_Lighting:1 A, 18.2_HvacPass:4 D
gnd-A54RJ2.3-16 → 18.2_HvacPass:3 C

WCL

AE57 (I/O_EA, 24WUp): J1:6, J1:18, J2:14
gnd-A57RJ1.18-18 → 36.1_WCL_Ricon:2 B

RJB

AE49 (I/O_EB, 24WUP): J1:6, J1:17, J1:18, J2:2, J2:3, J2:14
gnd-A49RJ2.2-18 → 13.1_FanDriveElectric:1 D

AE50 (I/O_EB, 12WUP): J1:6, J1:17, J1:18, J2:2, J2:3, J2:14
gnd-A50RJ1.17-18 → 26.2_Rear_lighting:2 F
gnd-A50RJ1.18-18 → 26.2_Rear_lighting:2 B
gnd-A50RJ2.2-18 → 26.3_Backup_Warnings:2 B

AE51 (I/O_EB, 12WUp): J1:6, J1:17, J1:18, J2:2, J2:3, J2:14
gnd-A51RJ1.17-18 → 26.2_Rear_lighting:2 D
gnd-A51RJ1.18-16 → 36.1_WCL_Ricon:6 A

AE52 (I/O_EB, 24WUP): J1:6, J1:17, J1:18, J2:2, J2:3, J2:14
gnd-A52RJ1.17-16 → 11.1_Lavatory:3 E
gnd-A52RJ1.18-18 → 25.1_Cmpt_Lighting:4 B

PREVOST®	WIRING DIAGRAM	No:D061640	Page:2.1 SP1	Rev:0

Ground distribution:
0-Electric gnd
00- Electronic Gnd
A-Dash - Lh console harness
F-Front junction box harness
FH-Front harness
FCH-Front clearance harness
R-Rear junction box harness
FR-Front to rear

Chassis ground distribution

Front GND stud

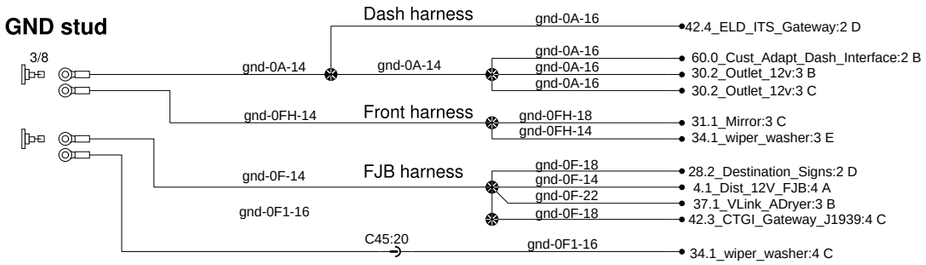

Evaporator cmpt. stud

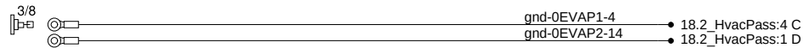

Urea cmpt. stud

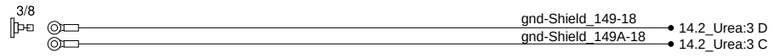

Inverter Luggage stud

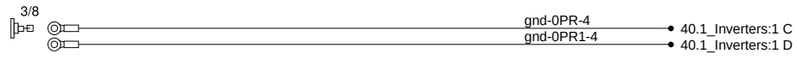

Upper LH drive axle

Battery cmpt. stud

Condensor cmpt. stud

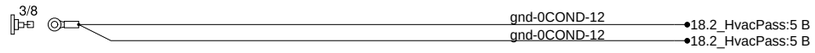

RJB stud

Front radiator stud

Rear radiator stud

Rad door stud

Trailer stud

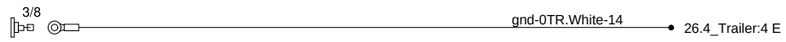

Engine studs

Engine cmpt. studs

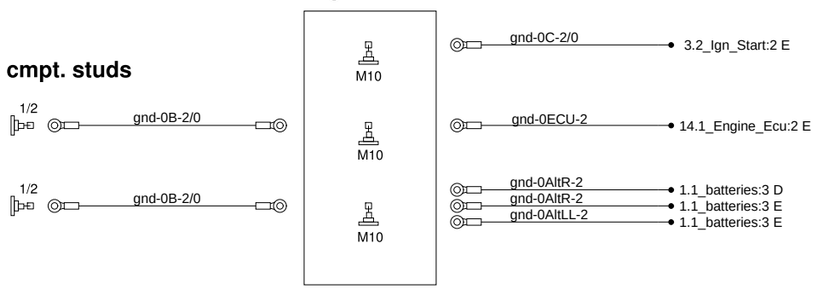

Ground distribution:
0-Electric gnd
00- Electronic Gnd
A-Dash - Lh console harness
F-Front junction box harness
FH-Front harness
FCH-Front clearance harness
R-Rear junction box harness
FR-Front to rear

Chassis ground distribution

Front GND stud

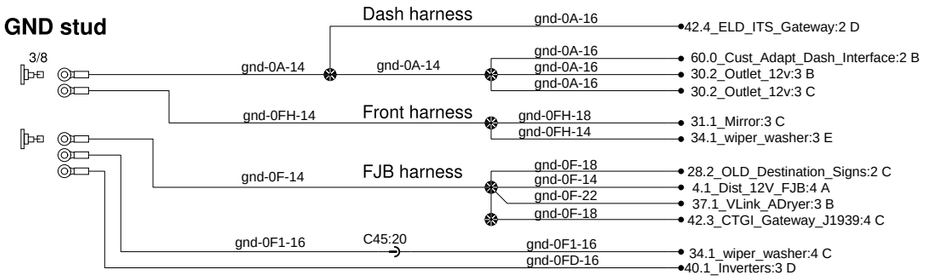

Evaporator cmpt. stud

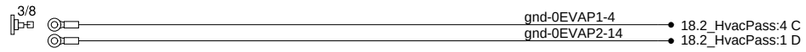

Urea cmpt. stud

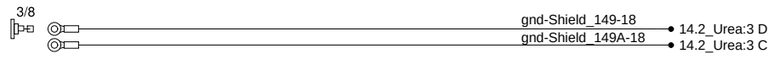

Inverter Luggage stud

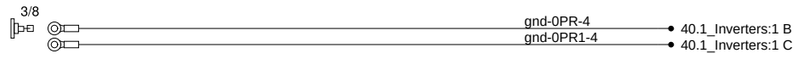

Upper LH drive axle

Battery cmpt. stud

Condensor cmpt. stud

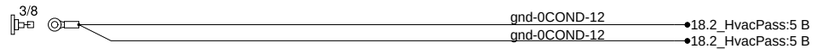

RJB stud

Front radiator stud

Rear radiator stud

Rad door stud

Trailer stud

Engine studs

Engine cmpt. studs

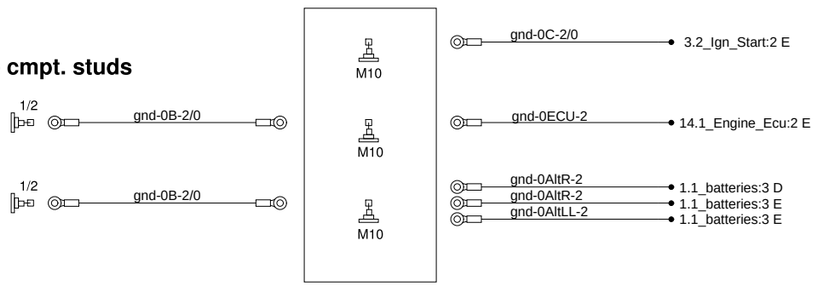

Ground distribution:
0-Electric gnd
00- Electronic Gnd
A-Dash - Lh console harness
F-Front junction box harness
FH-Front harness
FCH-Front clearance harness
R-Rear junction box harness
FR-Front to rear

Chassis ground distribution

Front GND stud

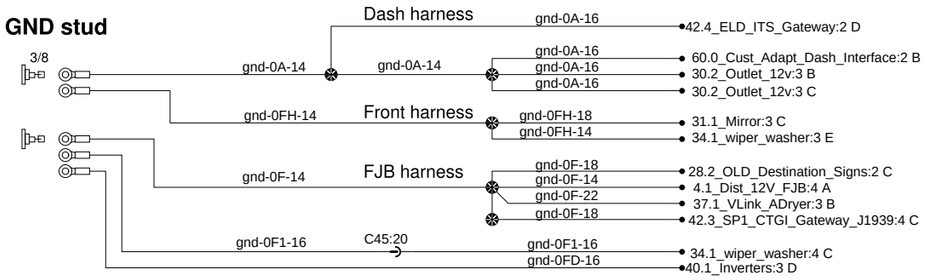

Evaporator cmpt. stud

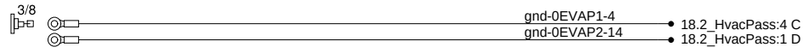

Urea cmpt. stud

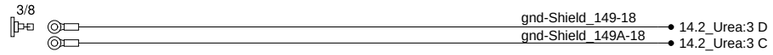

Inverter Luggage stud

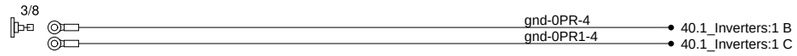

Upper LH drive axle

Battery cmpt. stud

Condensor cmpt. stud

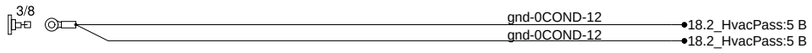

RJB stud

Front radiator stud

Rear radiator stud

Rad door stud

Trailer stud

Engine studs

Engine cmpt. studs

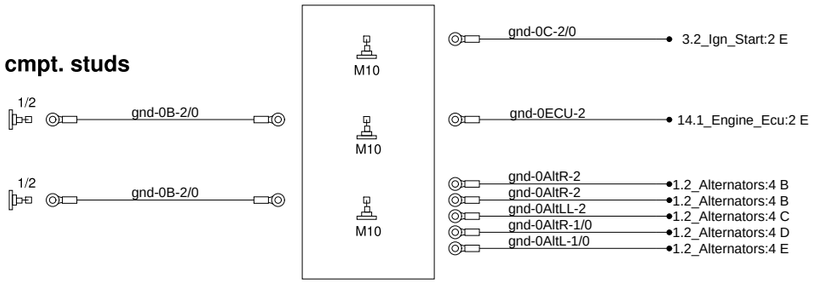

Ground distribution:
0-Electric gnd
00- Electronic Gnd
A-Dash - Lh console harness
F-Front junction box harness
FH-Front harness
FCH-Front clearance harness
R-Rear junction box harness
FR-Front to rear

Chassis ground distribution

Front GND stud

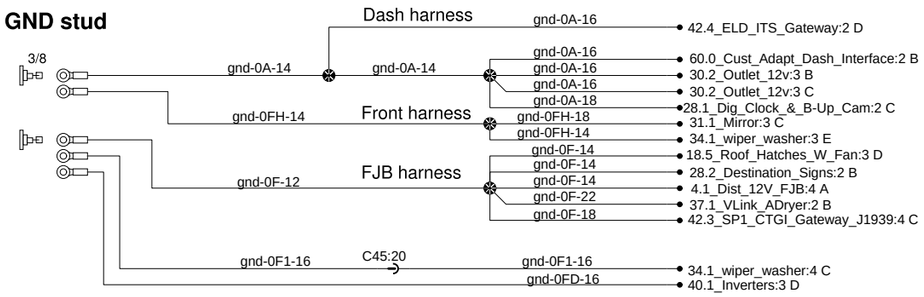

Evaporator cmpt. stud

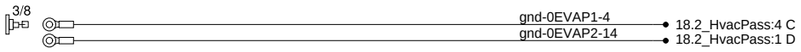

Urea cmpt. stud

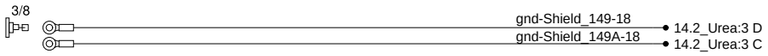

Inverter Luggage stud

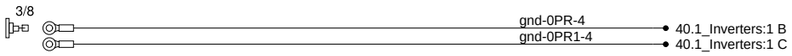

Upper LH drive axle

Battery cmpt. stud

Condensor cmpt. stud

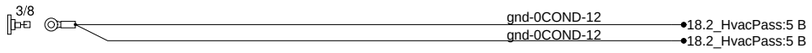

RJB stud

Front radiator stud

Rear radiator stud

Rad door stud

Trailer stud

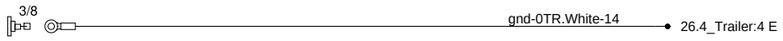

Engine studs

Engine cmpt. studs

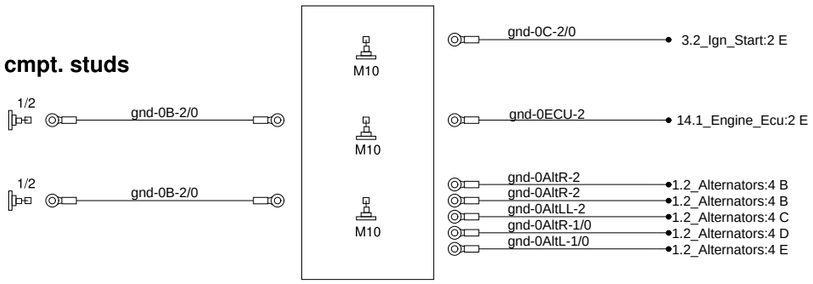

Ground distribution:
0-Electric gnd
00- Electronic Gnd
A-Dash - Lh console harness
F-Front junction box harness
FH-Front harness
FCH-Front clearance harness
R-Rear junction box harness
FR-Front to rear

Chassis ground distribution

Front GND stud

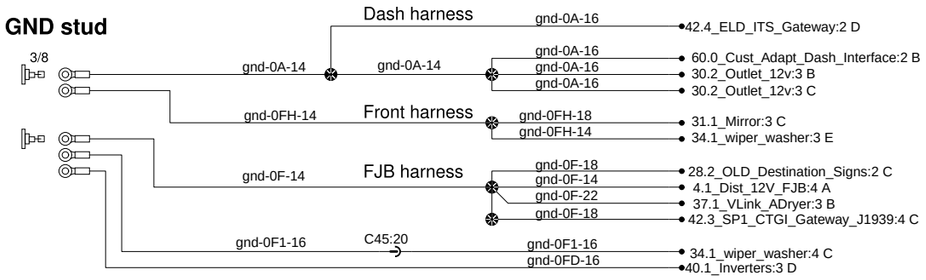

Evaporator cmpt. stud

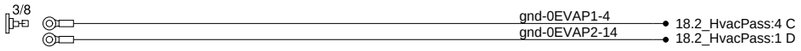

Urea cmpt. stud

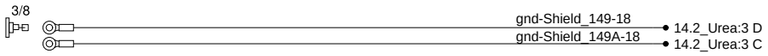

Inverter Luggage stud

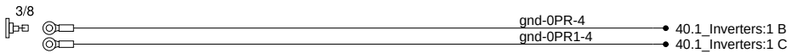

Upper LH drive axle

Battery cmpt. stud

Condensor cmpt. stud

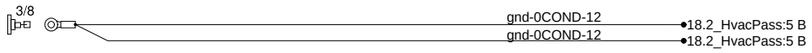

RJB stud

Front radiator stud

Rear radiator stud

Rad door stud

Trailer stud

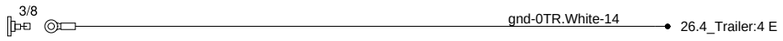

Engine studs

Engine cmpt. studs

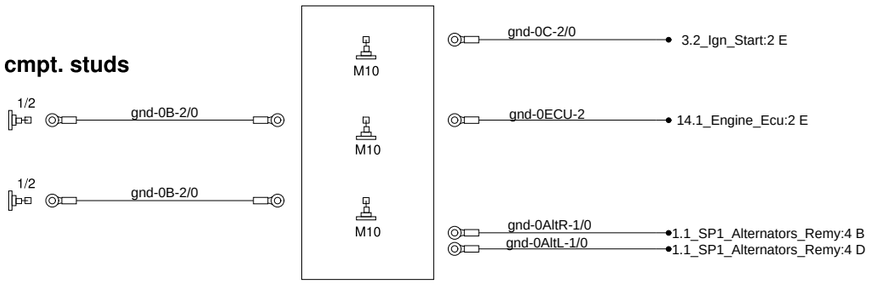

Ground distribution:
0-Electric gnd
00- Electronic Gnd

RGA - Rear Galley

Chassis ground distribution

Customer Adaptation - Rear Galley

RJB stud

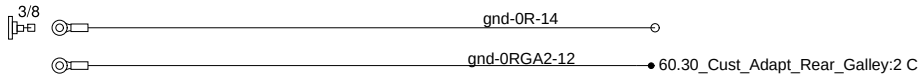

Main distribution batteries & ignition

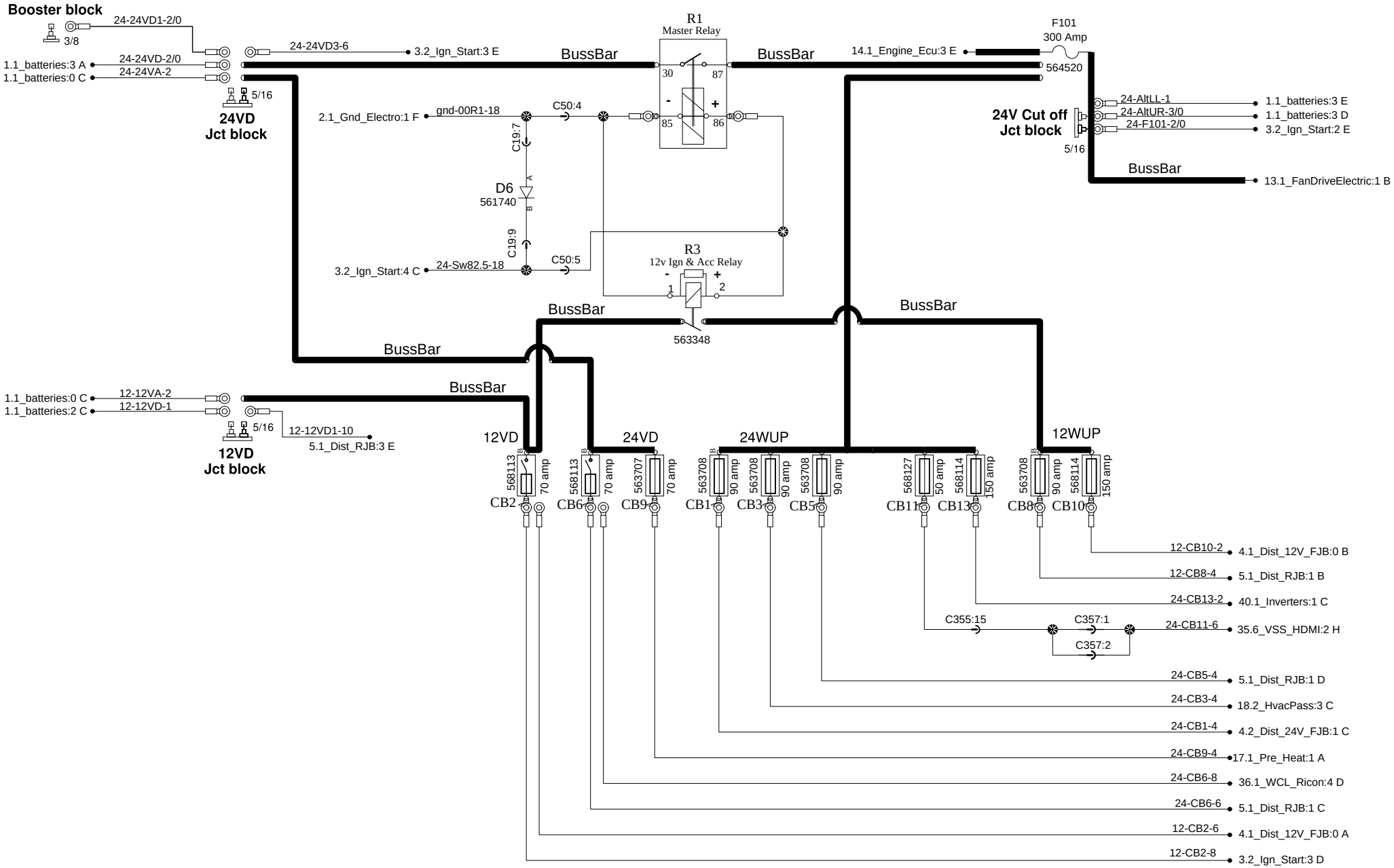

PREVOST®	WIRING DIAGRAM	No:D061640	Page:3.1	Rev:0

Main distribution batteries & ignition

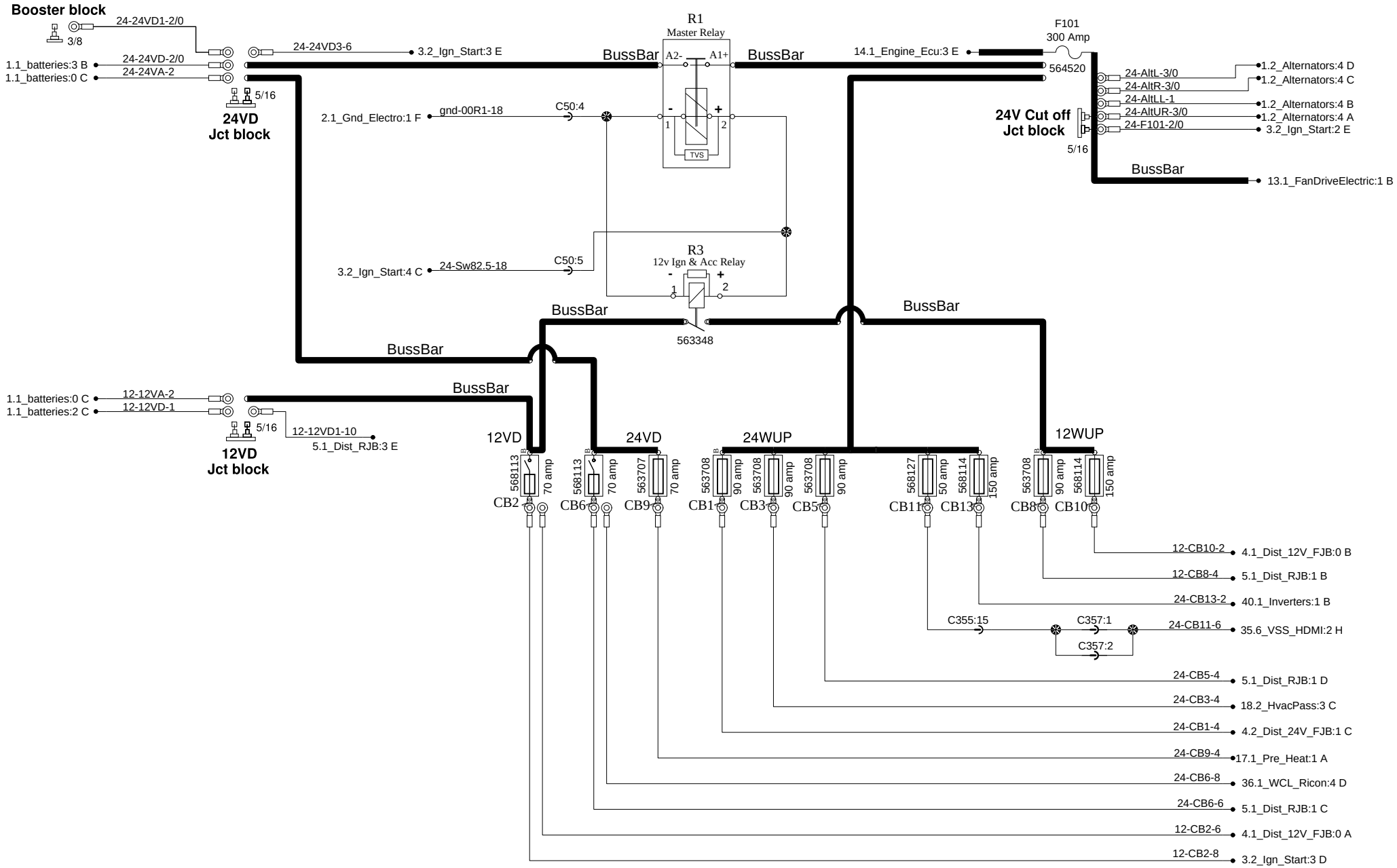

PREVOST®	WIRING DIAGRAM	No:D061640	Page:3.1	Rev:8

Main distribution batteries & ignition

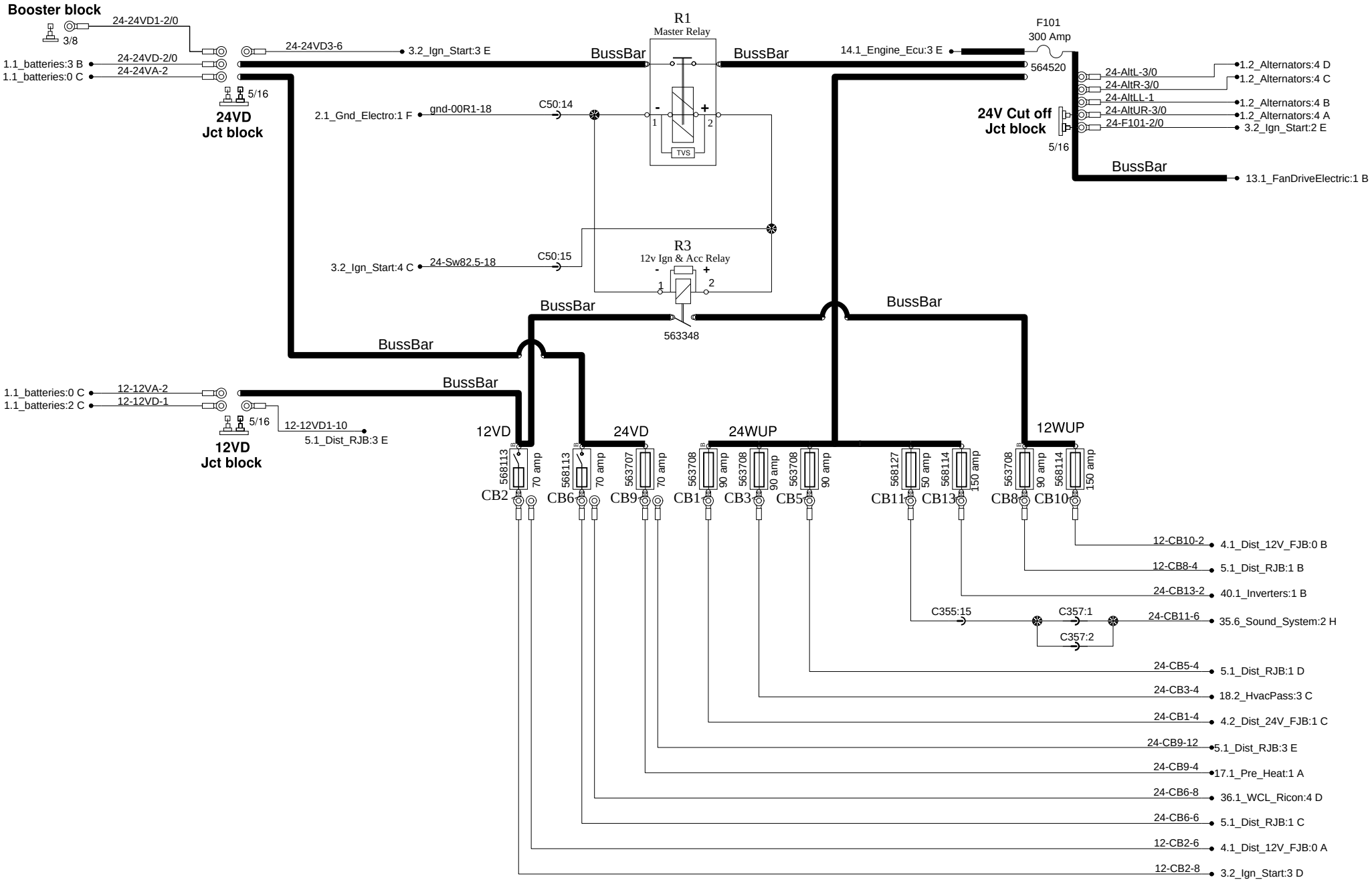

PREVOST®	WIRING DIAGRAM	No:D061640	Page:3.1	Rev:14

Main distribution batteries & ignition
Cutomer Adaptation Offshore Heating Sys.

REFER TO P3.1(STD) FOR ALL DETAILS

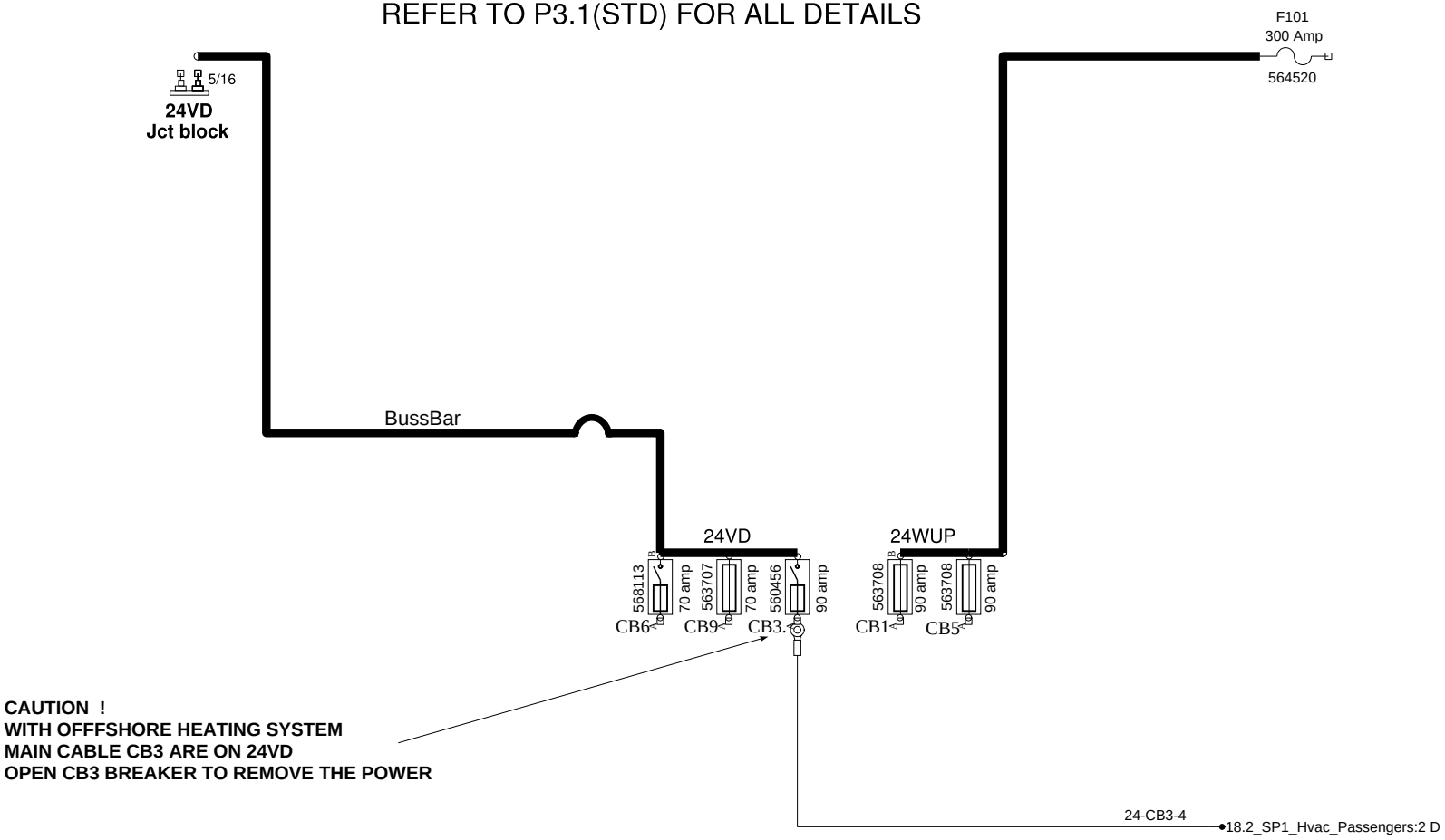

PREVOST®	WIRING DIAGRAM	No:D061640	Page:3.1 SP1	Rev:01

Main distribution batteries & ignition

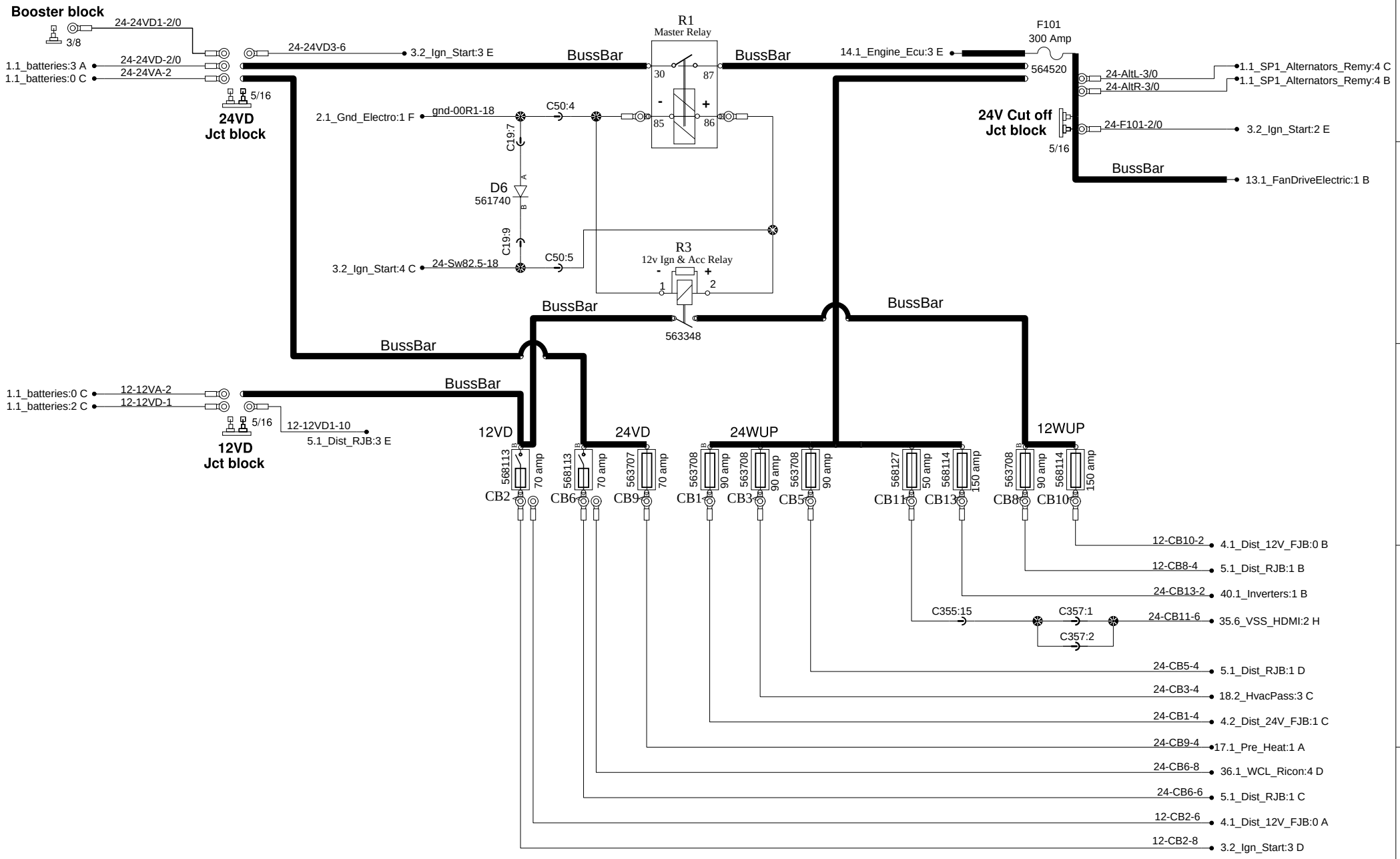

PREVOST®	WIRING DIAGRAM	No:D061640	Page:3.1 SP2	Rev:0

Ignition and engine start

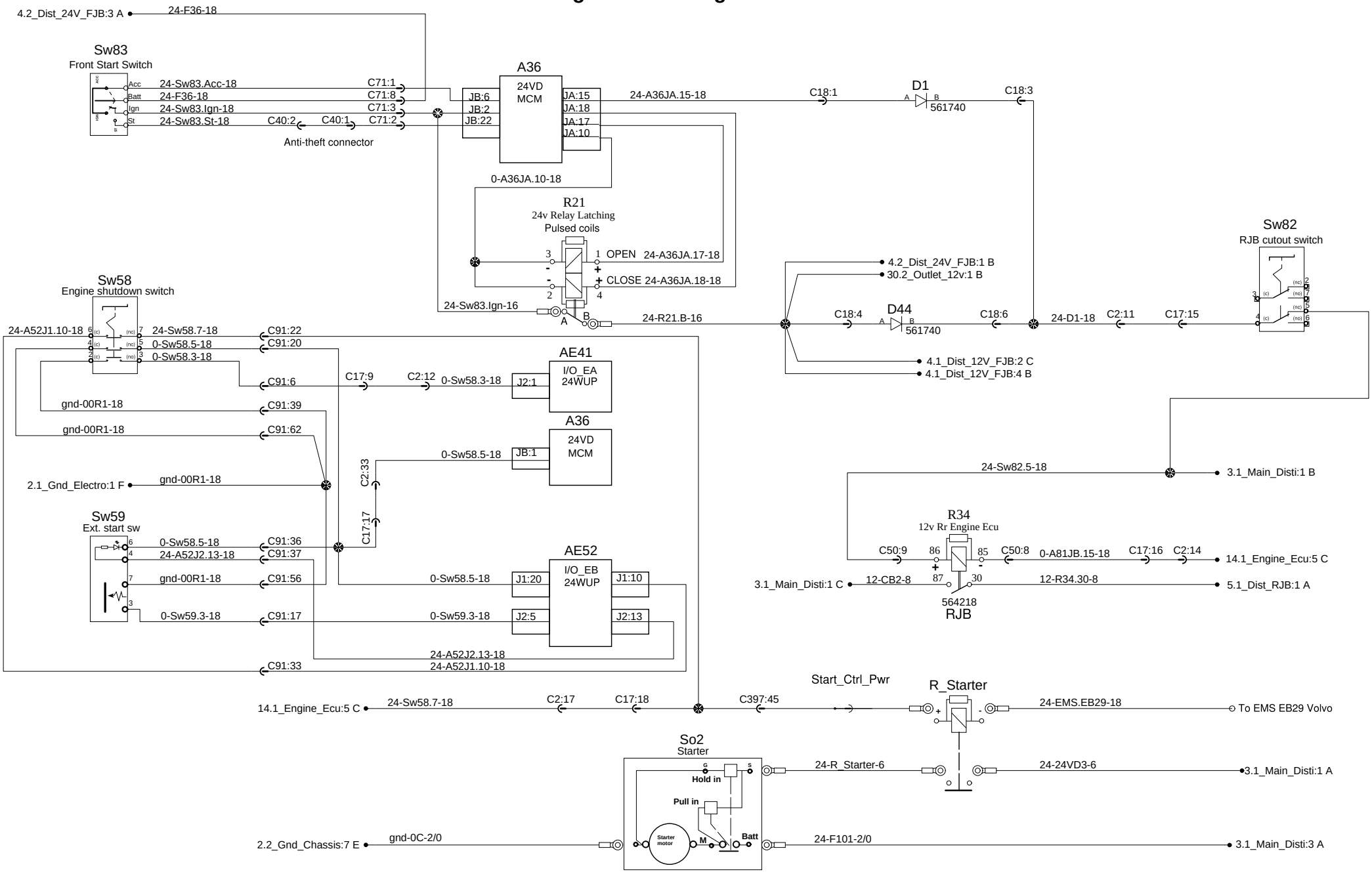

PREVOST®	WIRING DIAGRAM	No:D061640	Page:3.2	Rev:0

Ignition and engine start

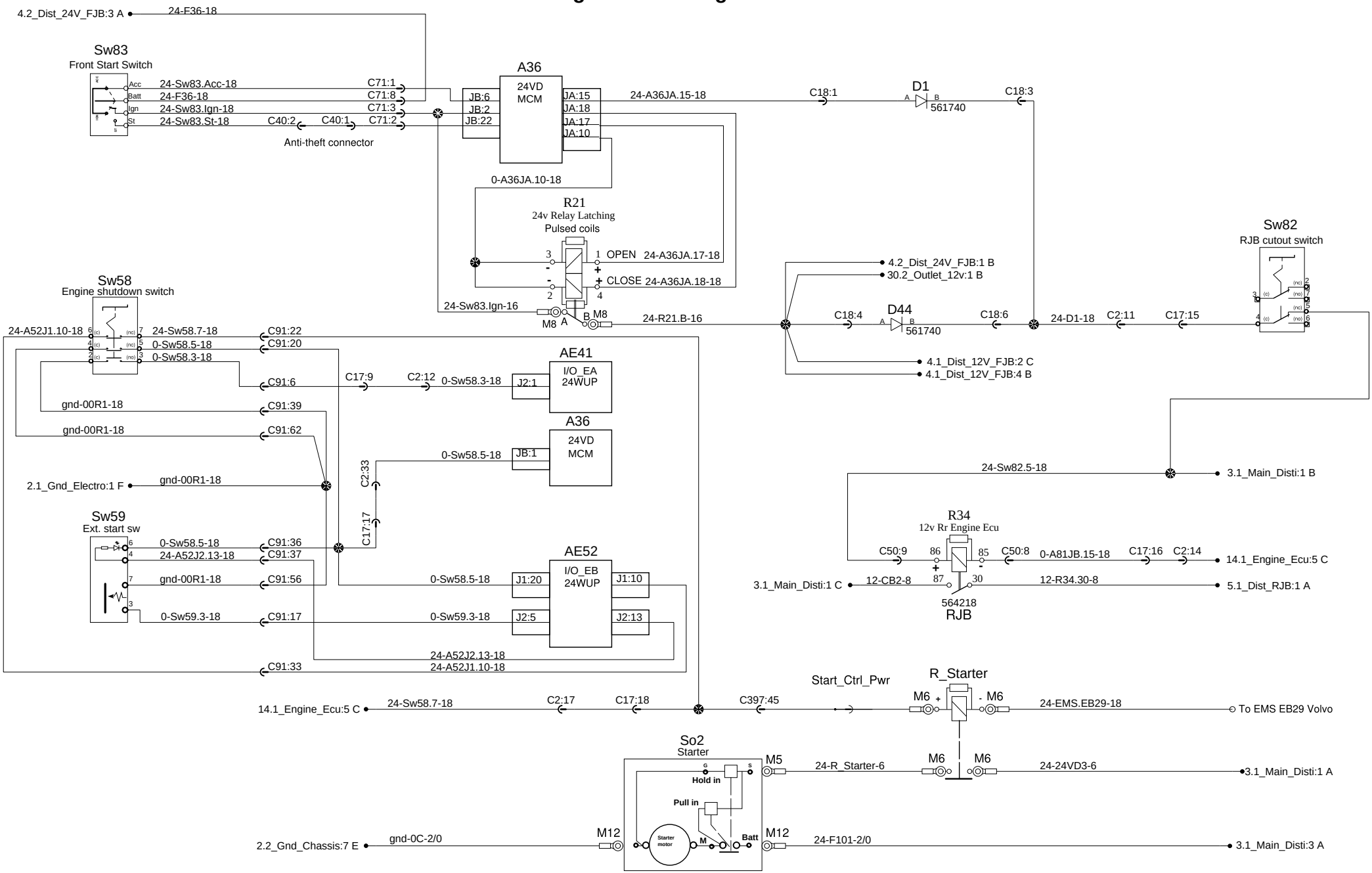

PREVOST®	WIRING DIAGRAM	No:D061640	Page:3.2	Rev:1

Ignition and engine start

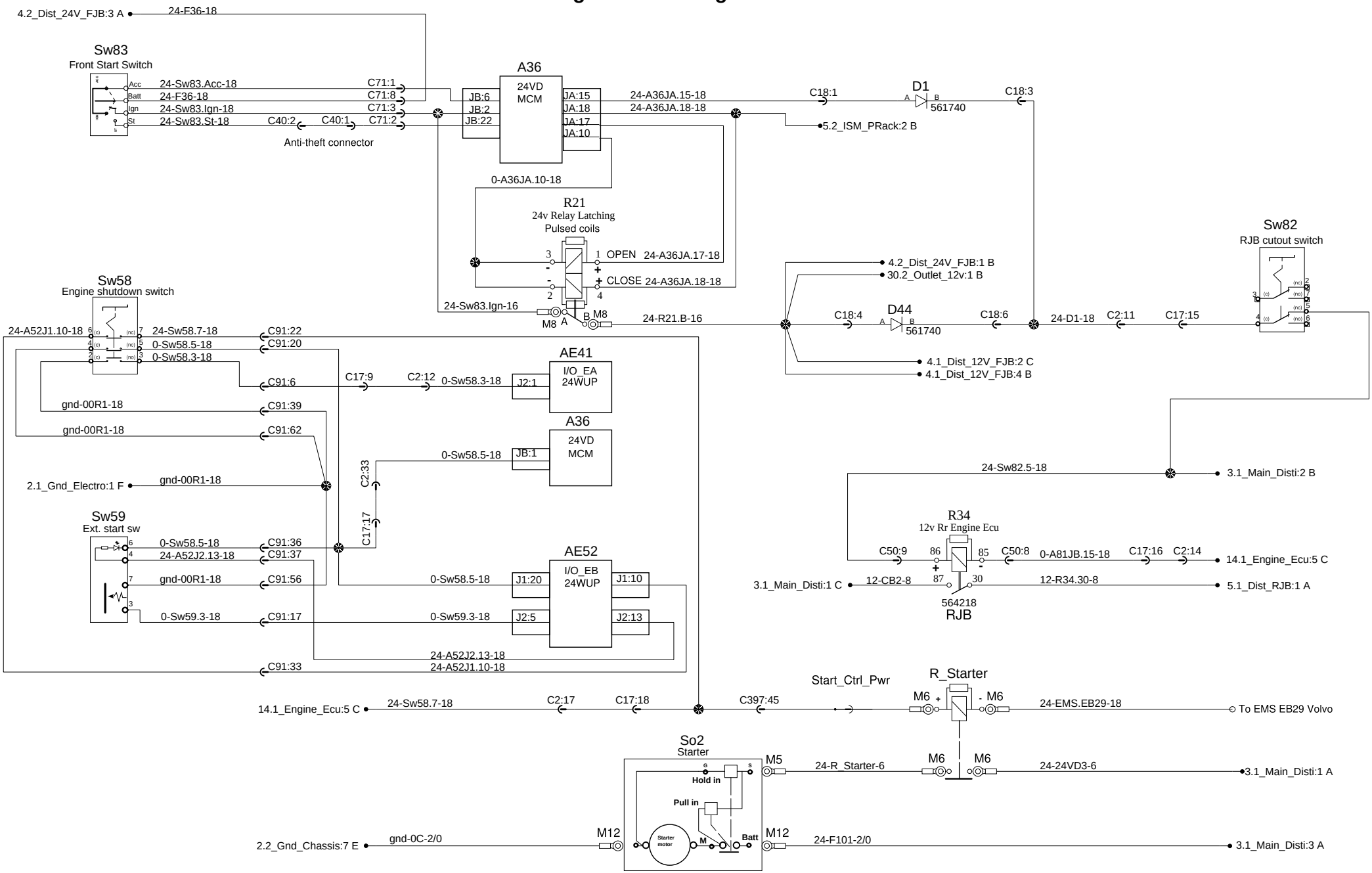

PREVOST®	WIRING DIAGRAM	No:D061640	Page:3.2	Rev:11

Ignition and engine start

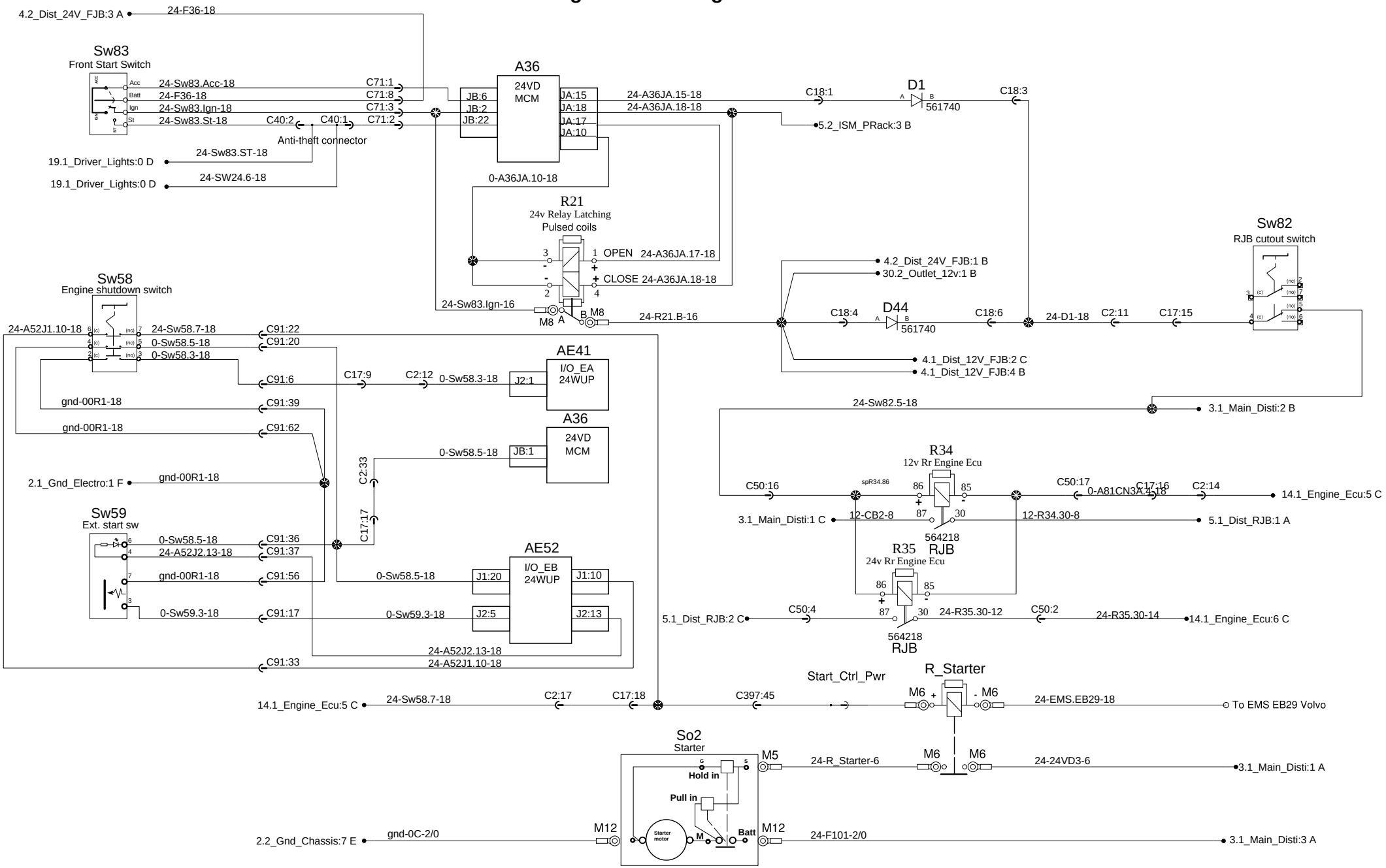

PREVOST®	WIRING DIAGRAM	No:D061640	Page:3.2	Rev:16

Ignition and engine start

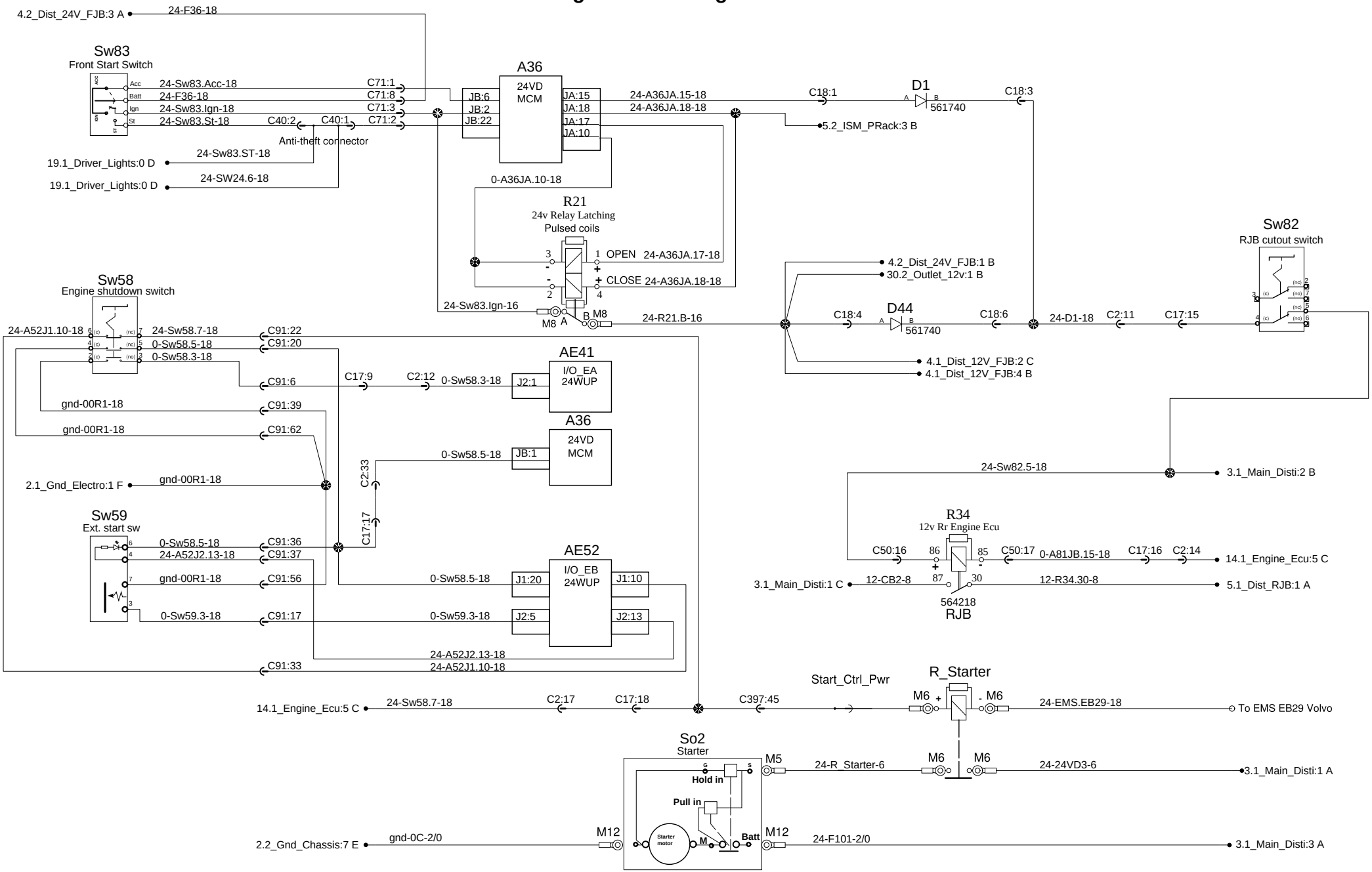

PREVOST®	WIRING DIAGRAM	No:D061640	Page:3.2 SP1	Rev:00

12V Power distribution front junction box

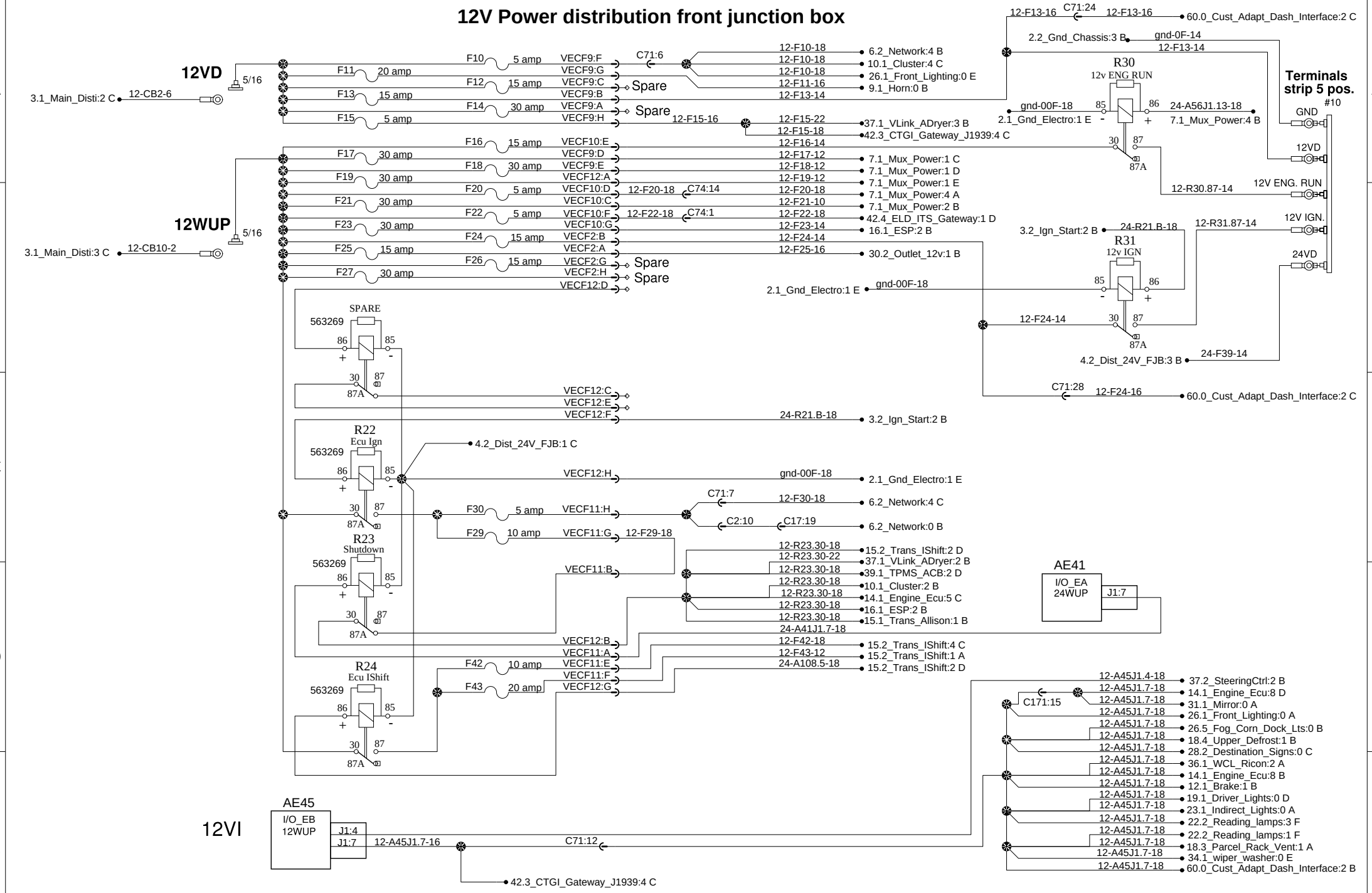

PREVOST®	WIRING DIAGRAM	No:D061640	Page:4.1	Rev:0

12V Power distribution front junction box

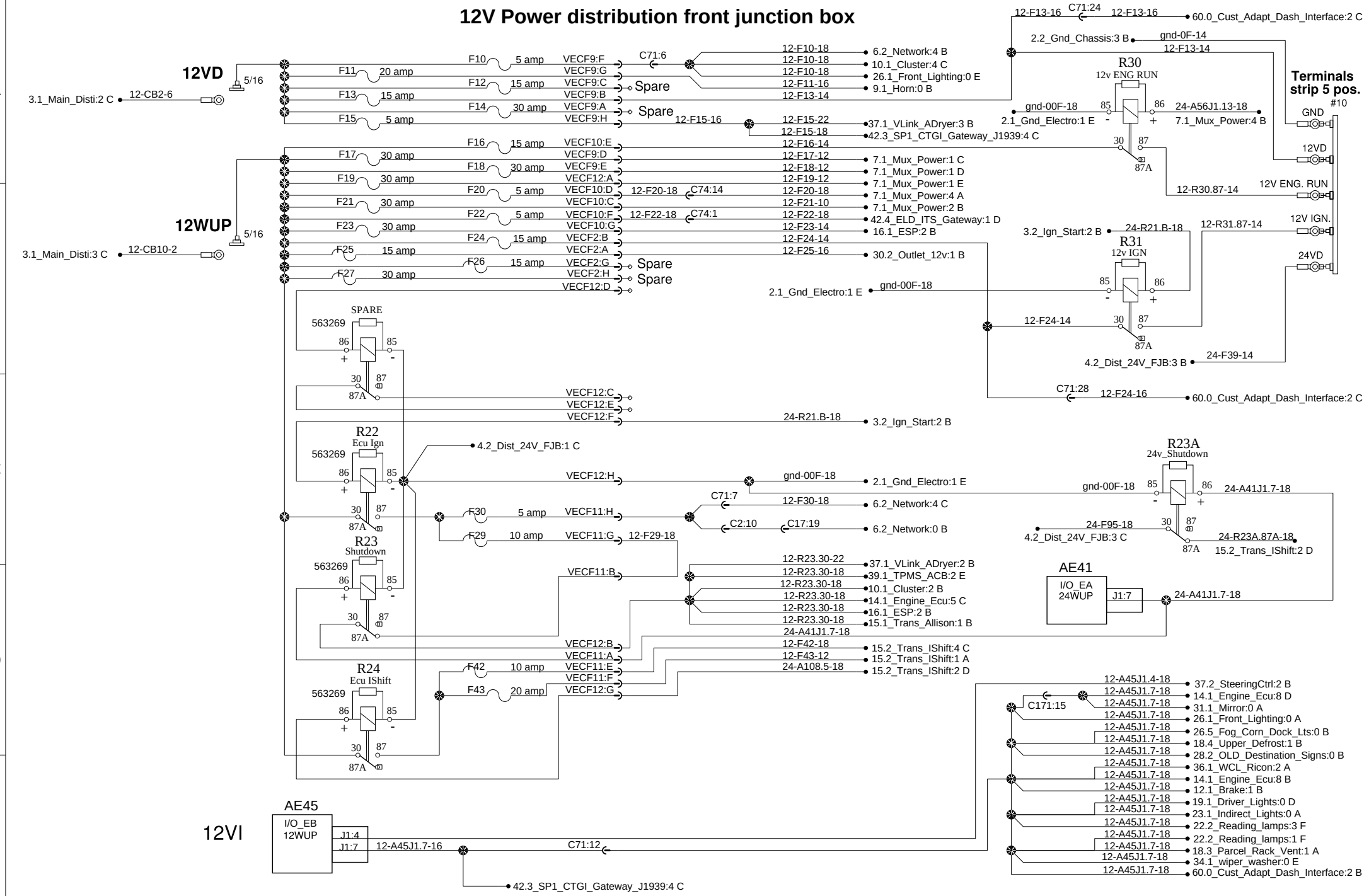

PREVOST®

WIRING DIAGRAM | No:D061640 | Page:4.1 | Rev:4

12V Power distribution front junction box

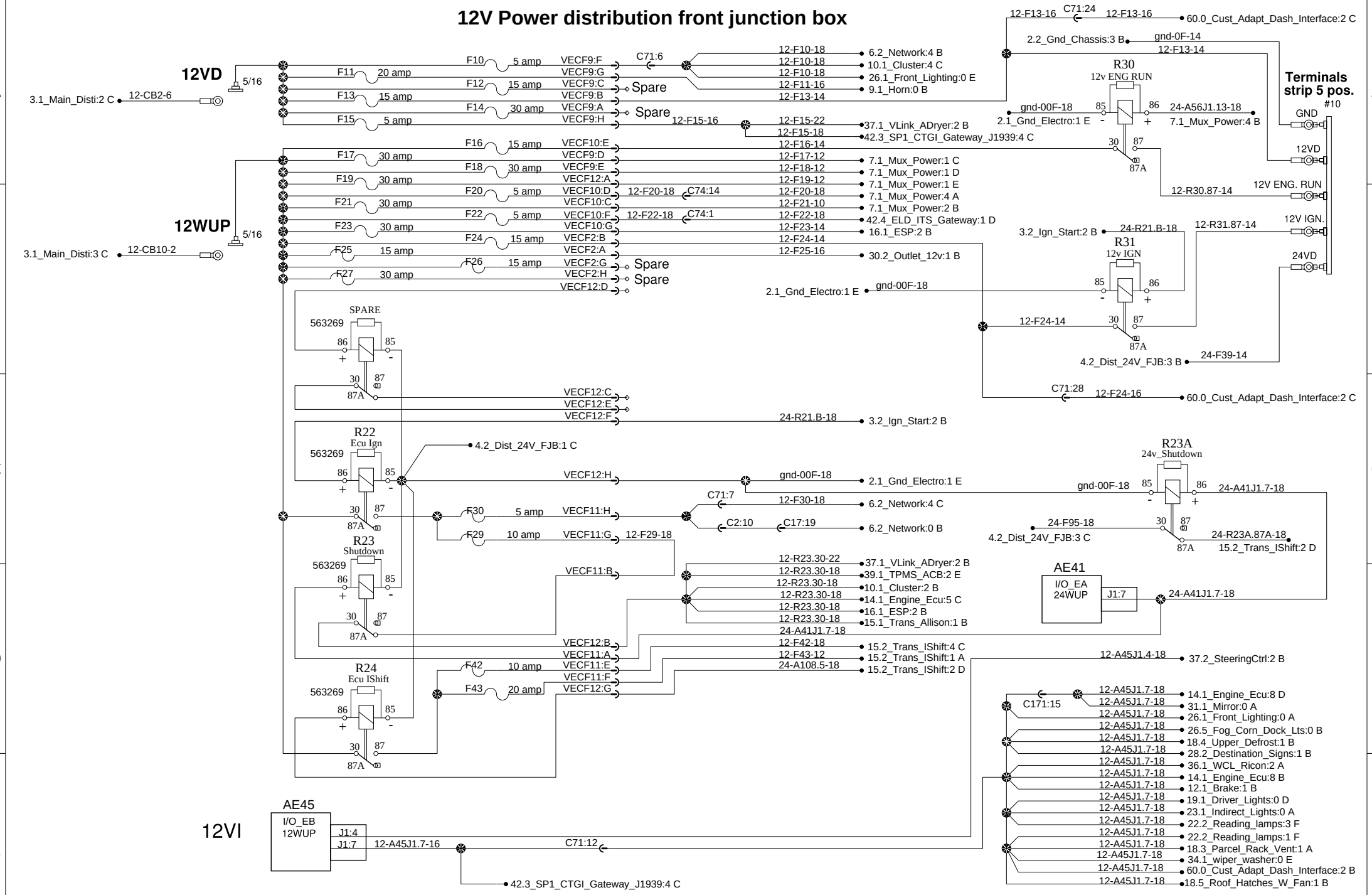

PREVOST®	WIRING DIAGRAM	No:D061640	Page:4.1	Rev:11

12V Power distribution front junction box

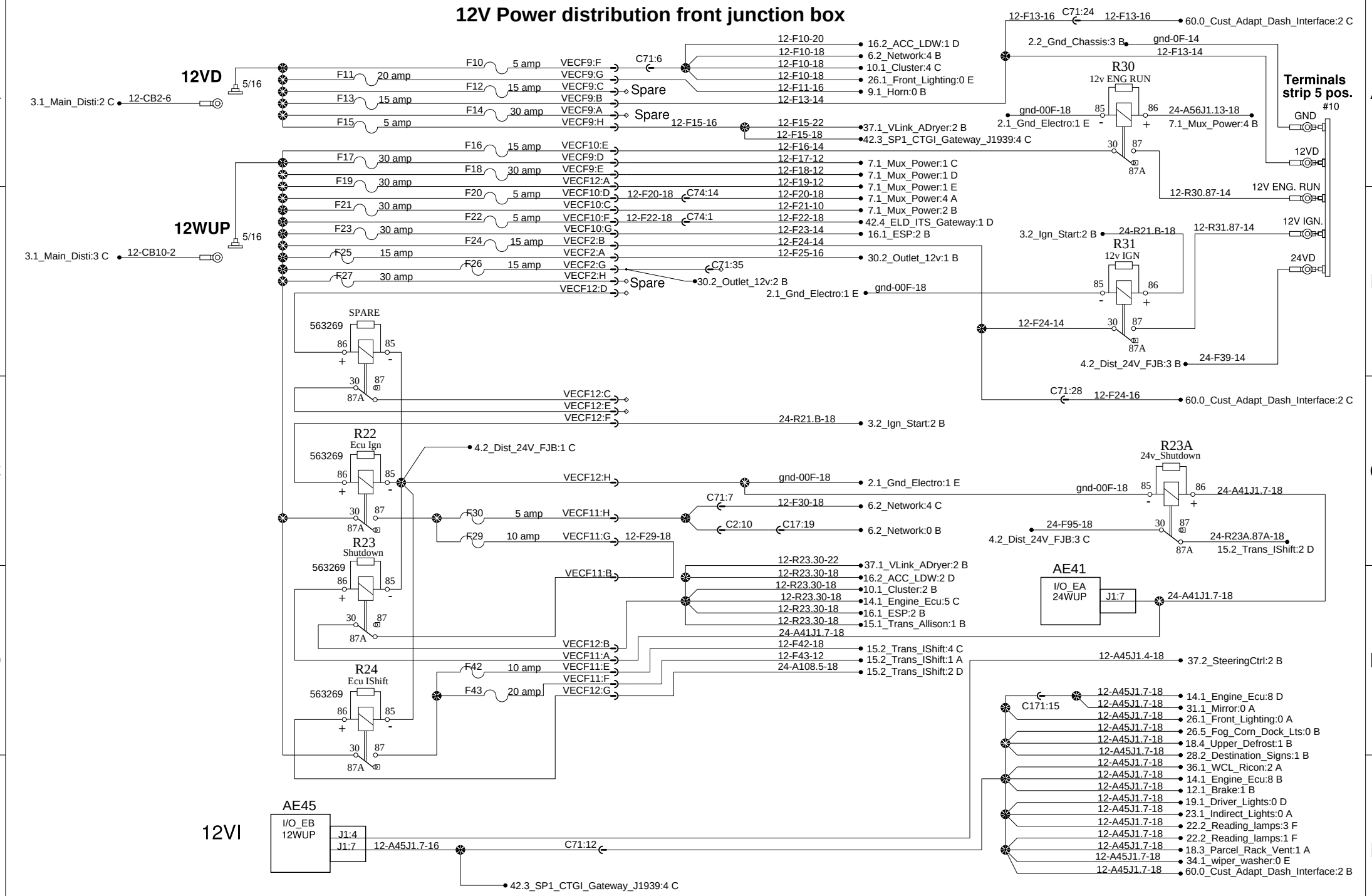

PREVOST®	WIRING DIAGRAM	No:D061640	Page:4.1	Rev:15

12V Power distribution front junction box

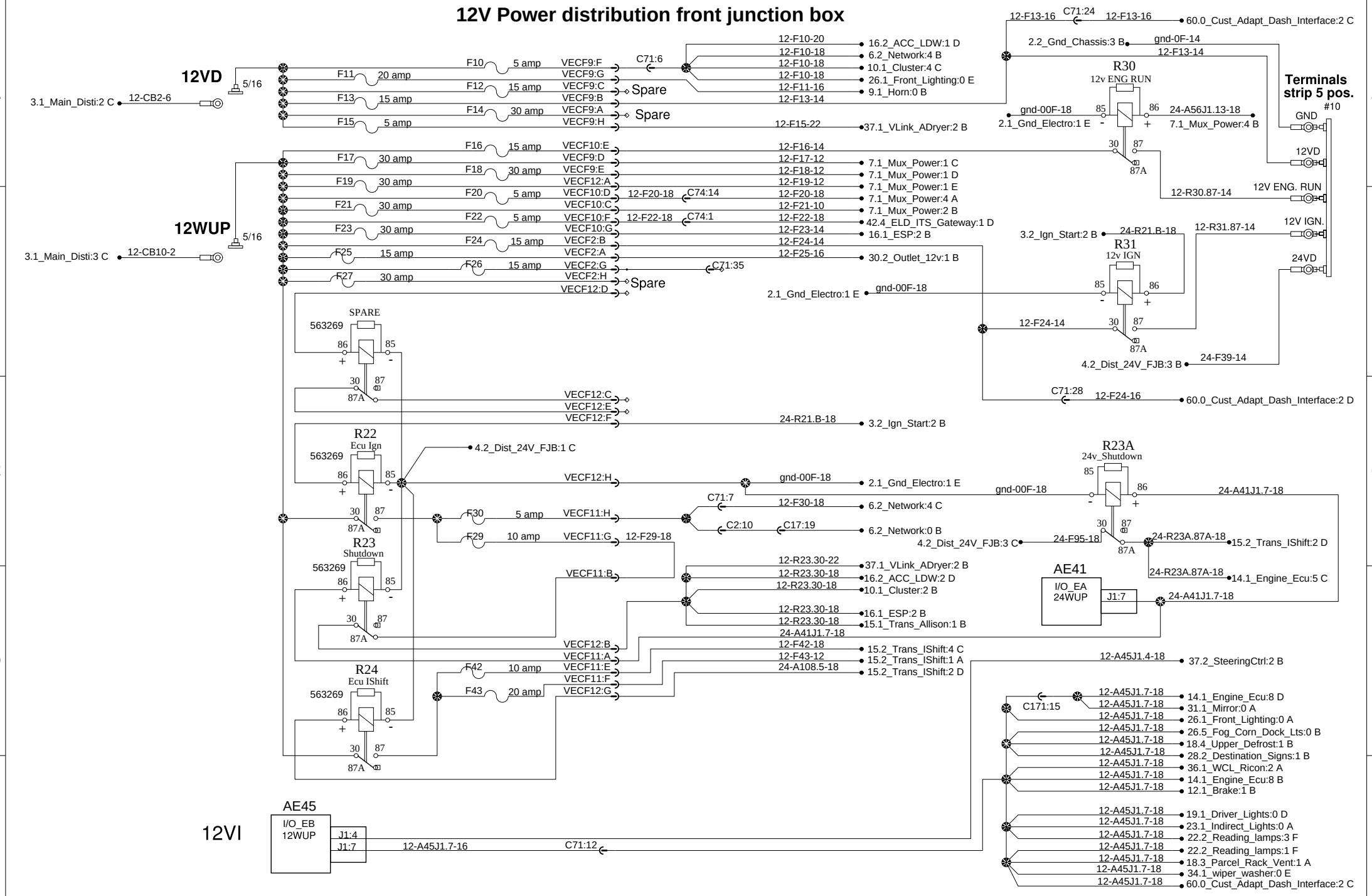

PREVOST®	WIRING DIAGRAM	No:D061640	Page:4.1	Rev:16

24V Power distribution front junction box

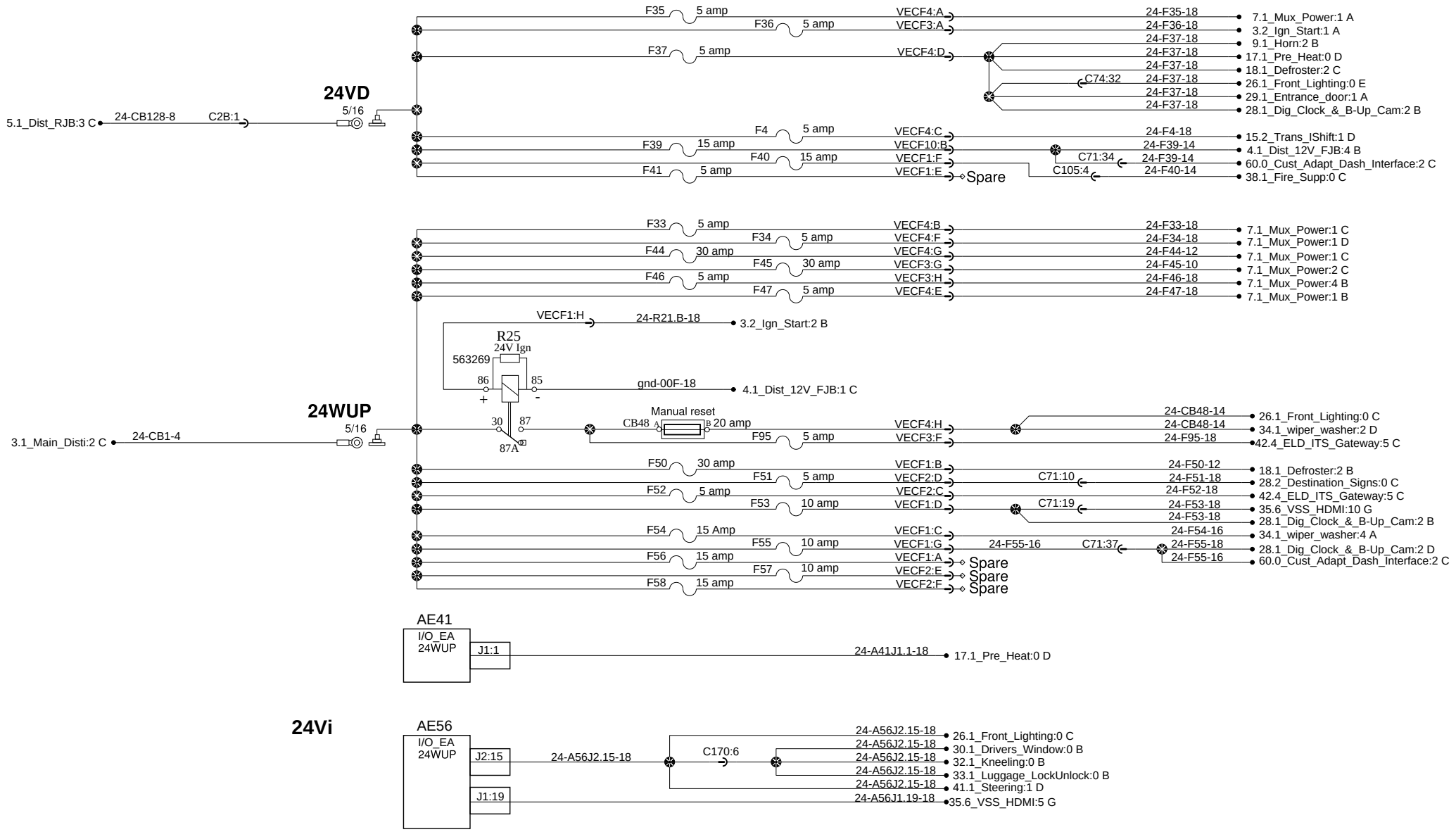

PREVOST®	WIRING DIAGRAM	No:D061640	Page:4.2	Rev:0

24V Power distribution front junction box

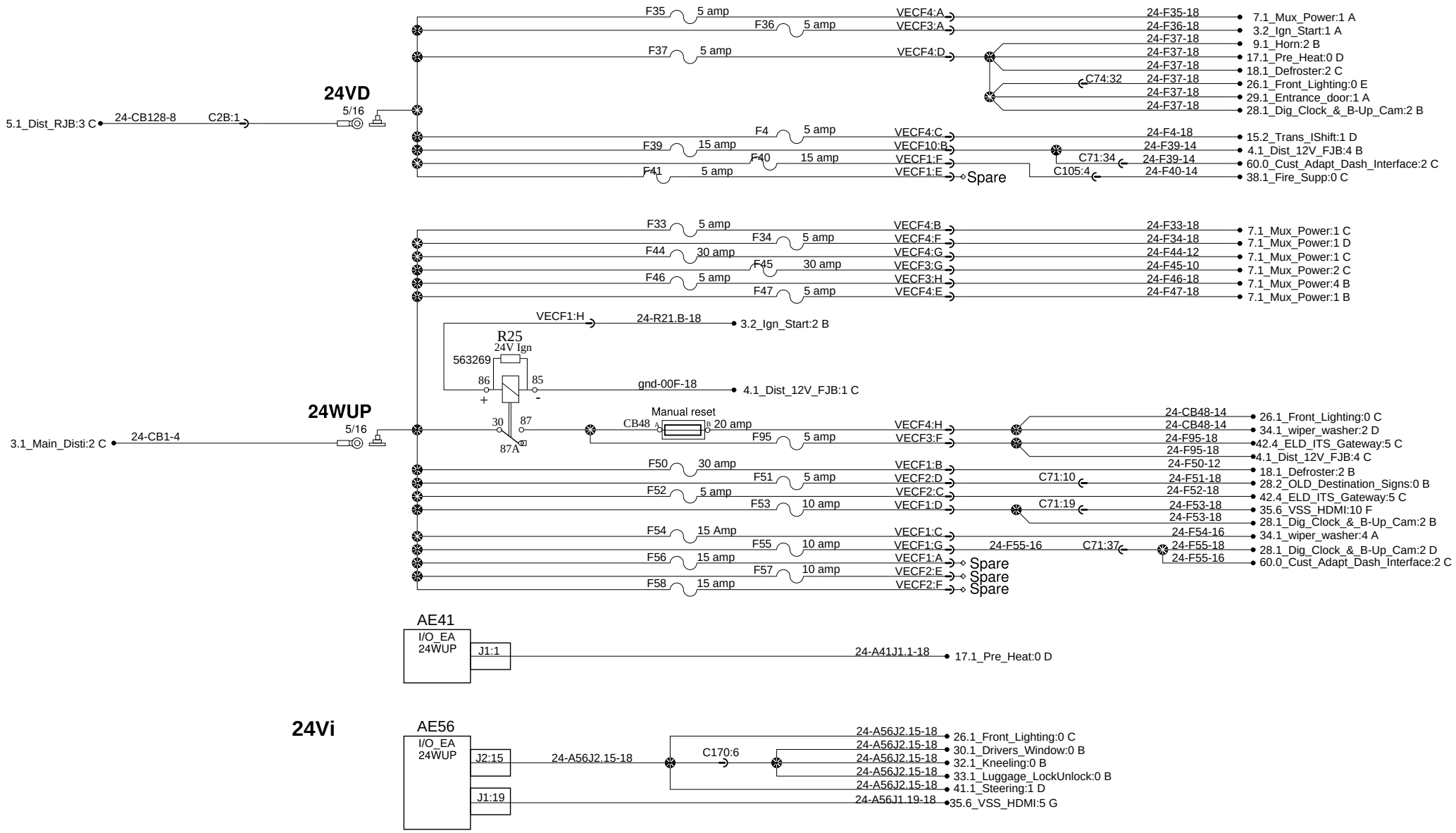

PREVOST®	WIRING DIAGRAM	No:D061640	Page:4.2	Rev:4

24V Power distribution front junction box

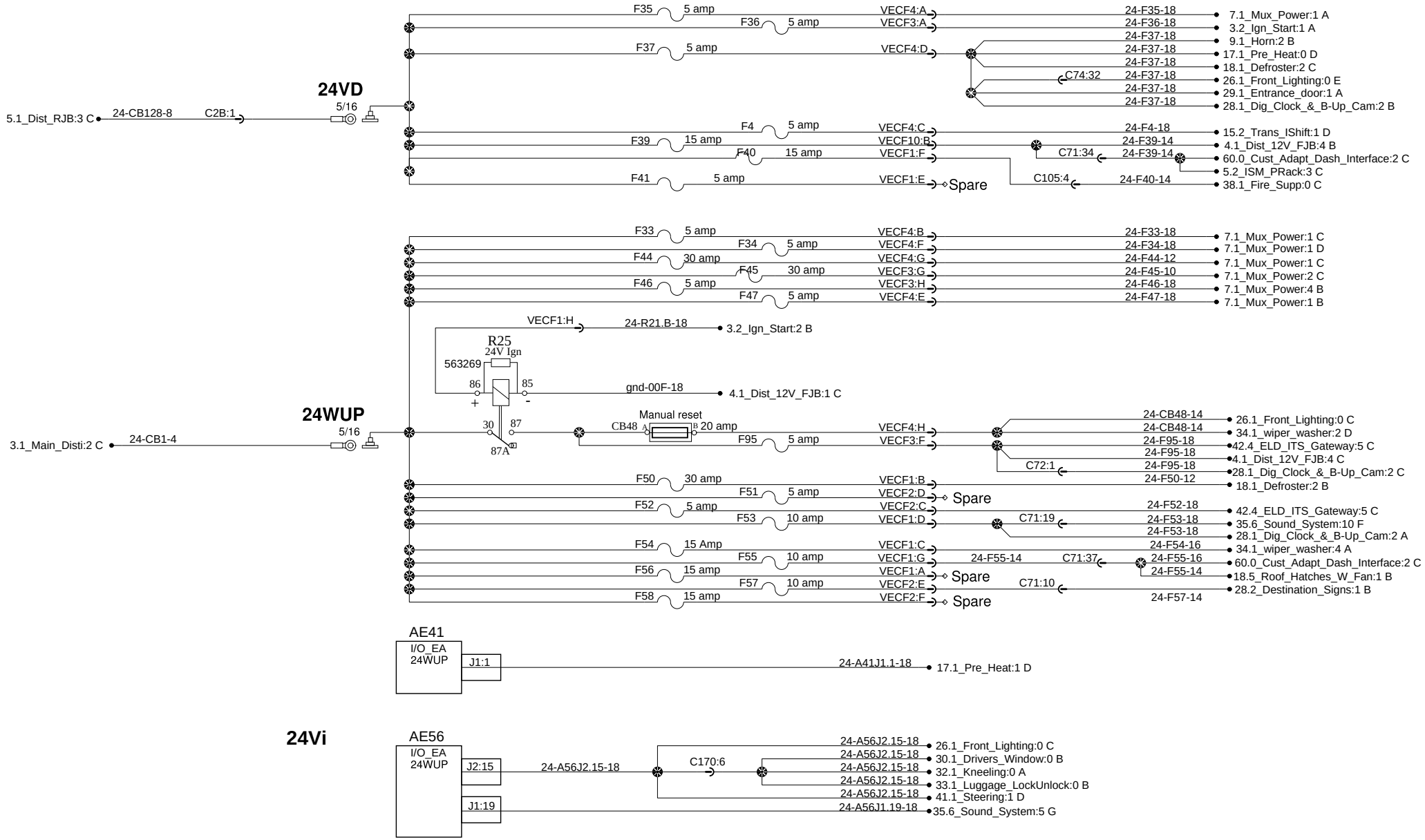

PREVOST®	WIRING DIAGRAM	No:D061640	Page:4.2	Rev:11

24V Power distribution front junction box

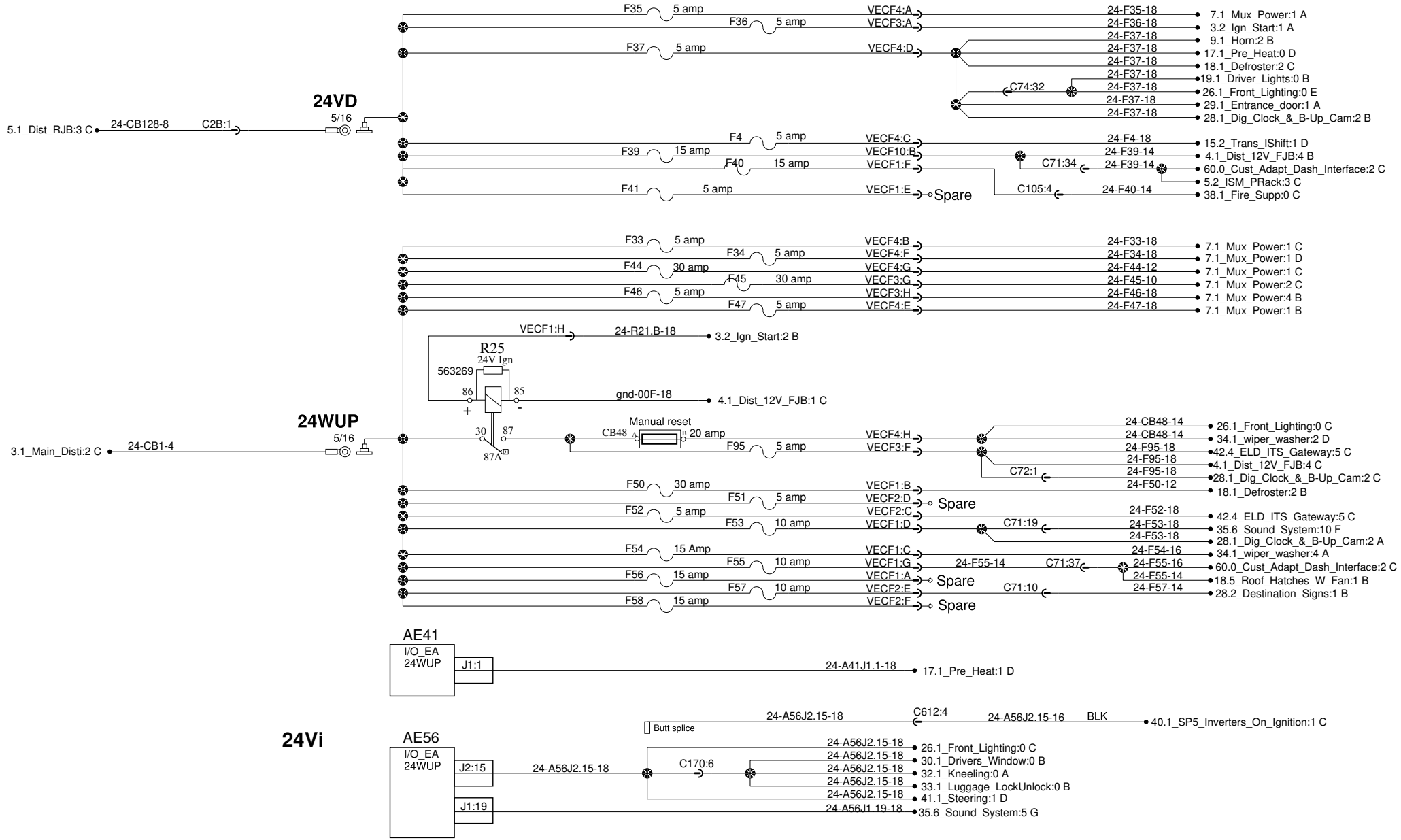

PREVOST®	WIRING DIAGRAM	No:D061640	Page:4.2	Rev:15

24V Power distribution front junction box

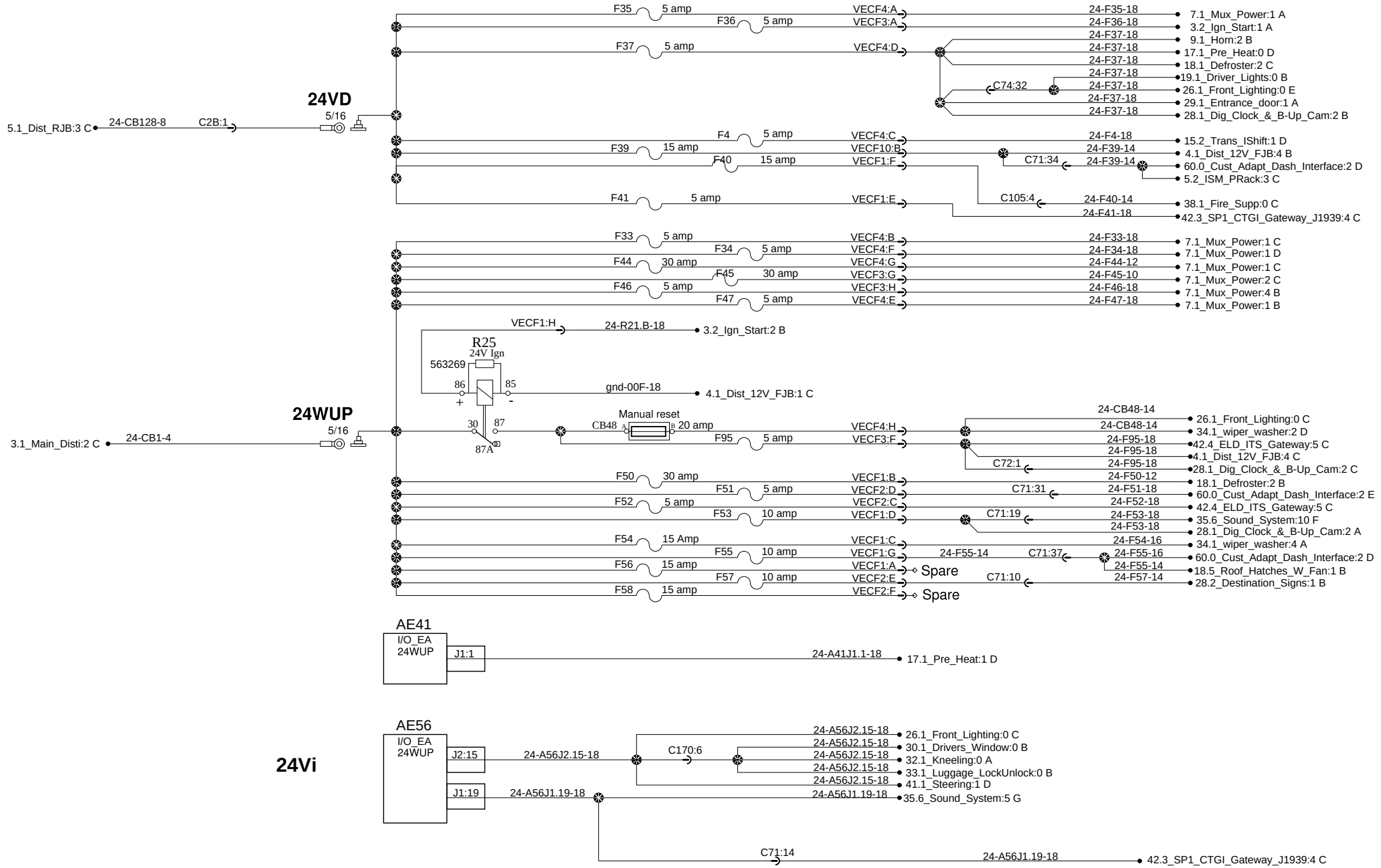

PREVOST®	WIRING DIAGRAM	No:D061640	Page:4.2	Rev:16

24V Power distribution front junction box

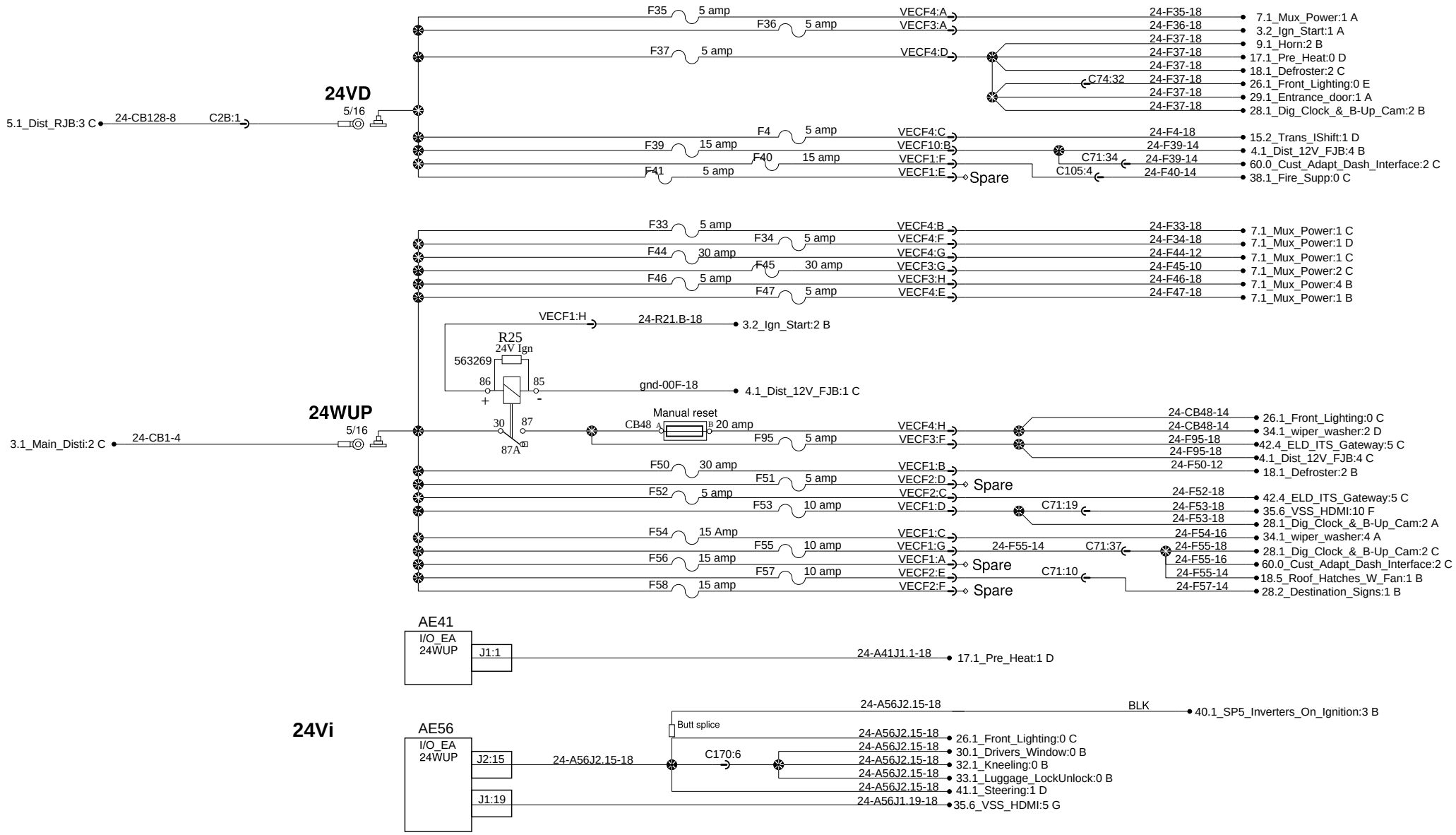

PREVOST®	WIRING DIAGRAM	No:D061640	Page:4.2 SP1	Rev:00

Power distribution rear junction box

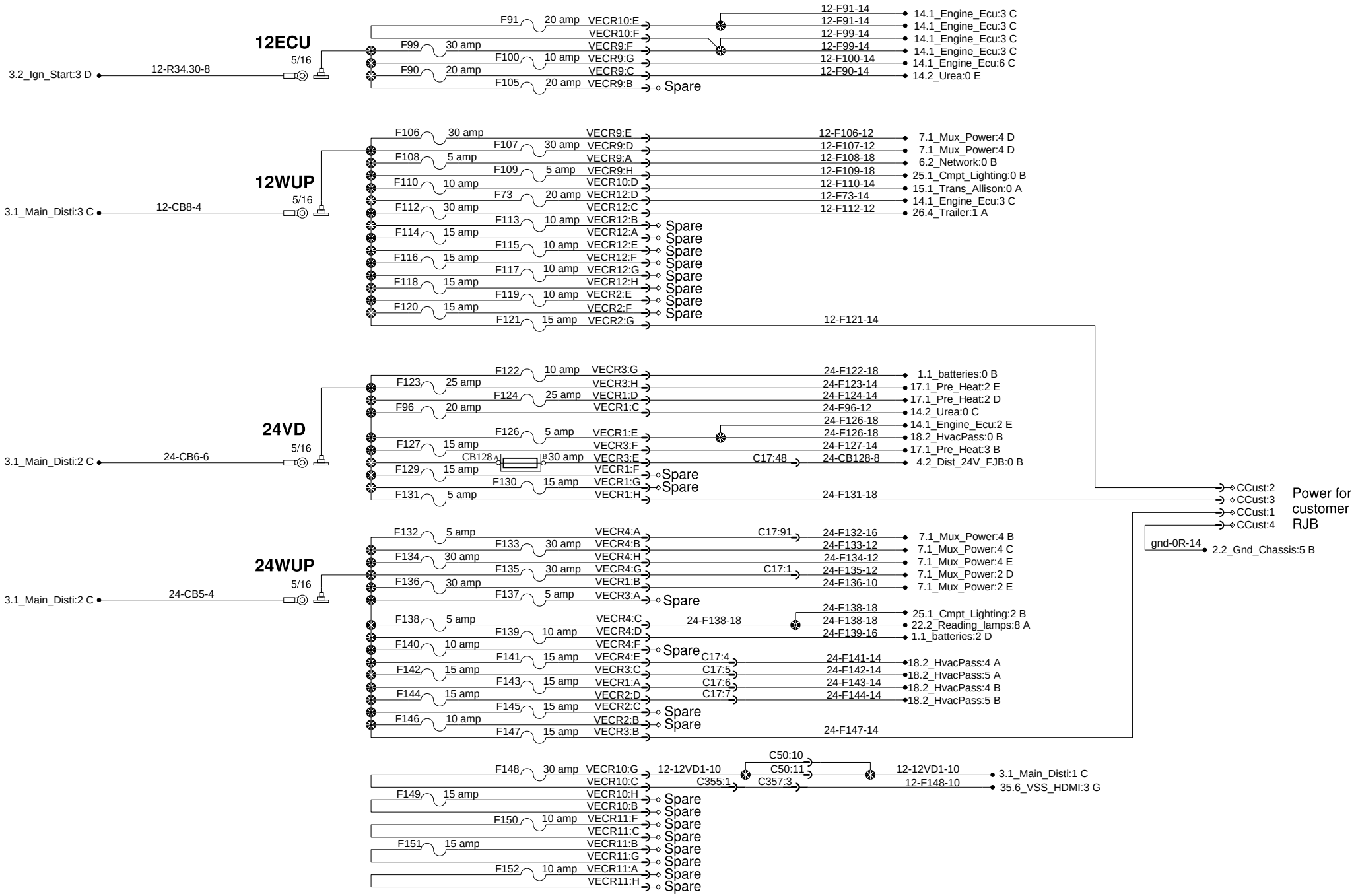

PREVOST®	WIRING DIAGRAM	No:D061640	Page:5.1	Rev:0

Power distribution rear junction box

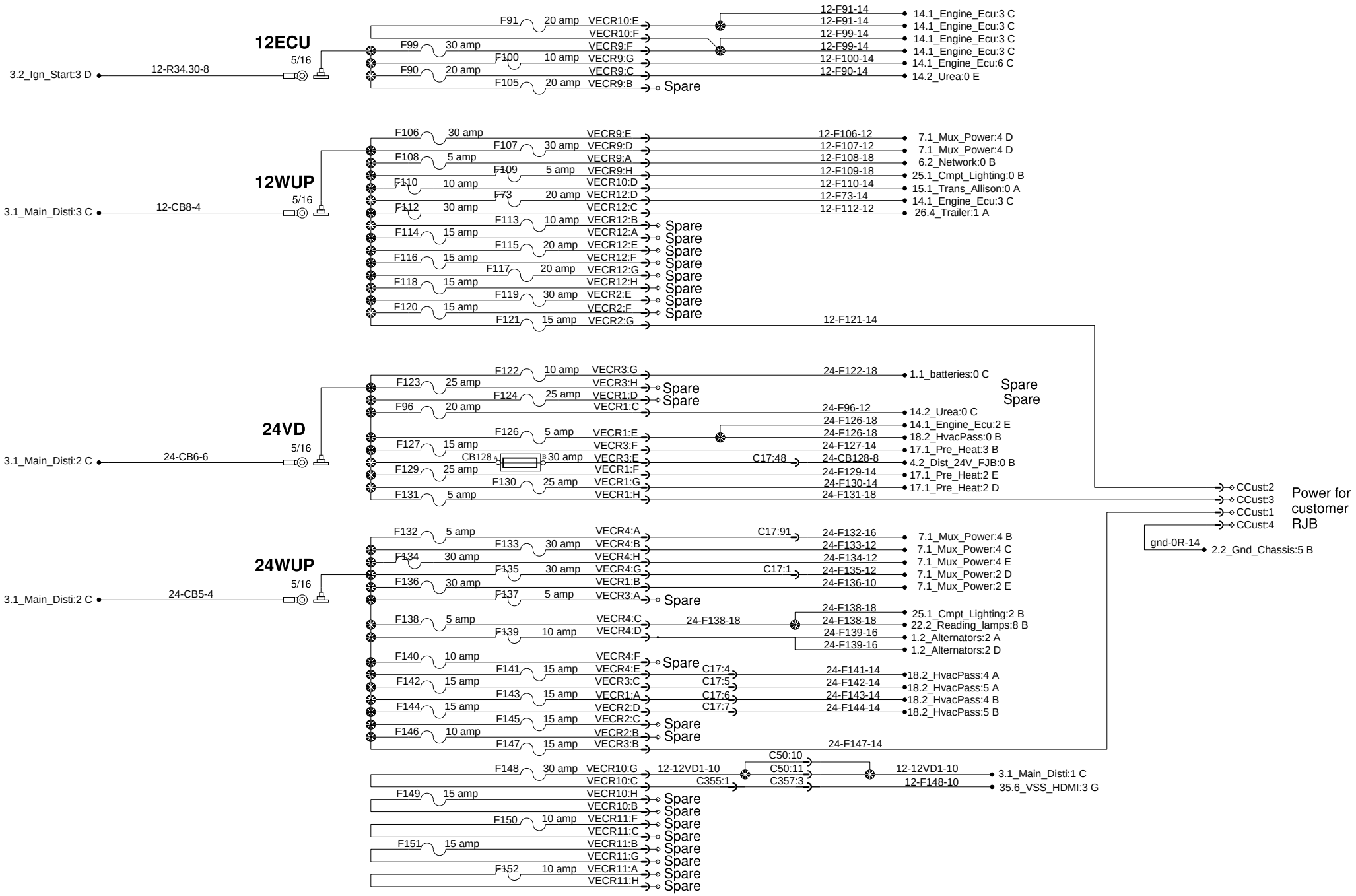

PREVOST®	WIRING DIAGRAM	No:D061640	Page:5.1	Rev:8

Power distribution rear junction box

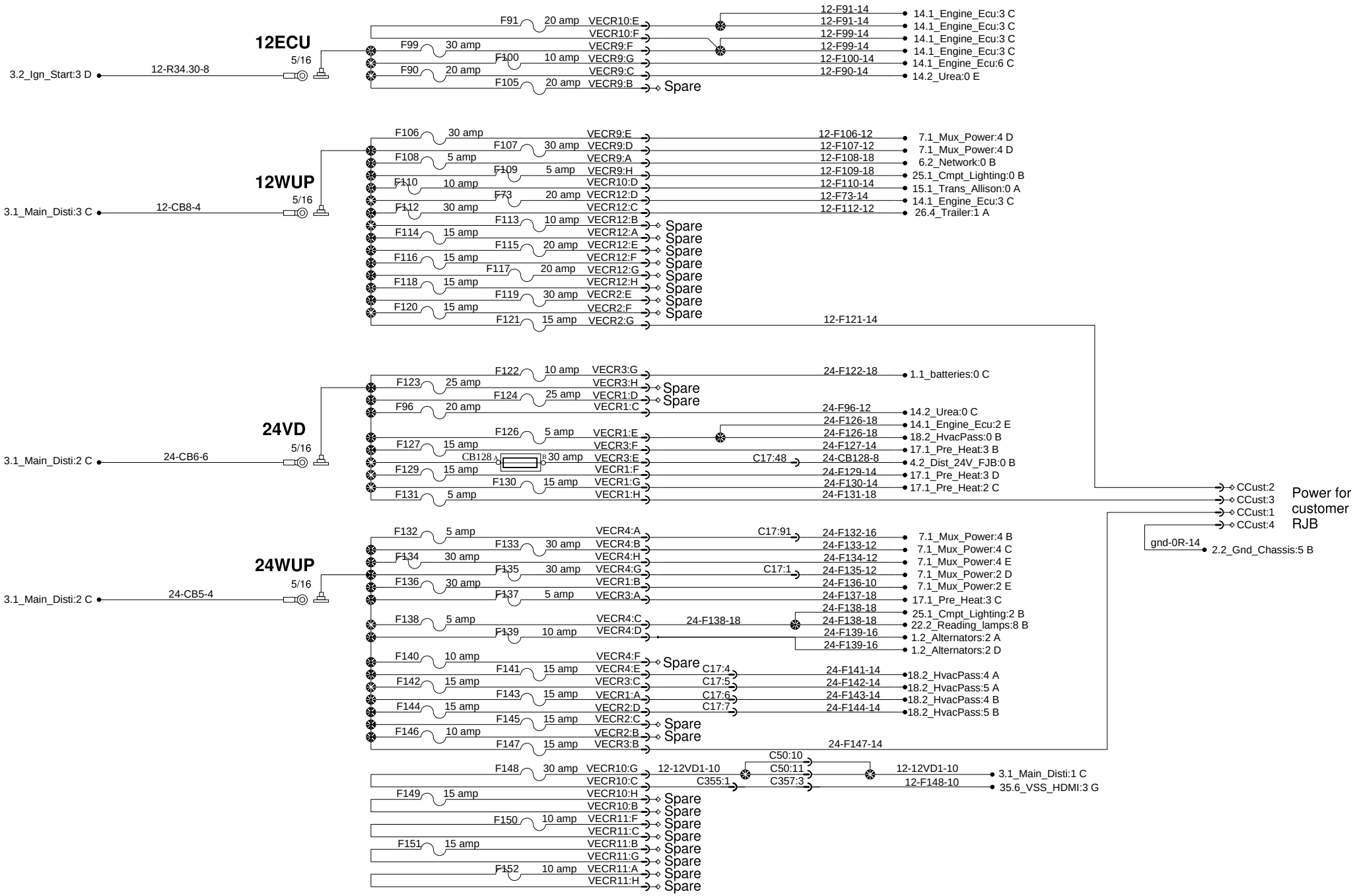

PREVOST®	WIRING DIAGRAM	No:D061640	Page:5.1	Rev:10

Power distribution rear junction box

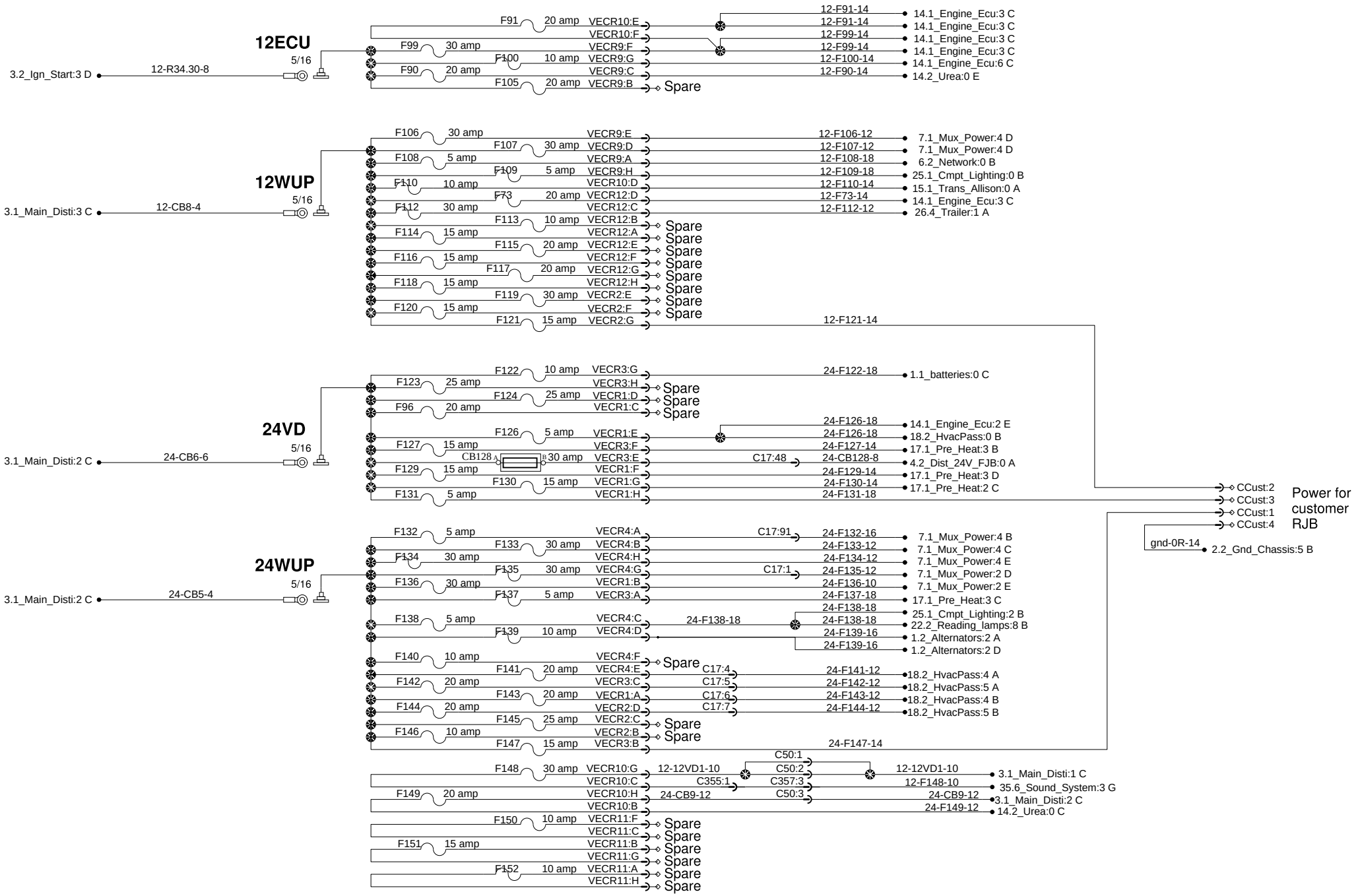

PREVOST®

WIRING DIAGRAM

No:D061640

Page:5.1

Rev:14

Power distribution rear junction box

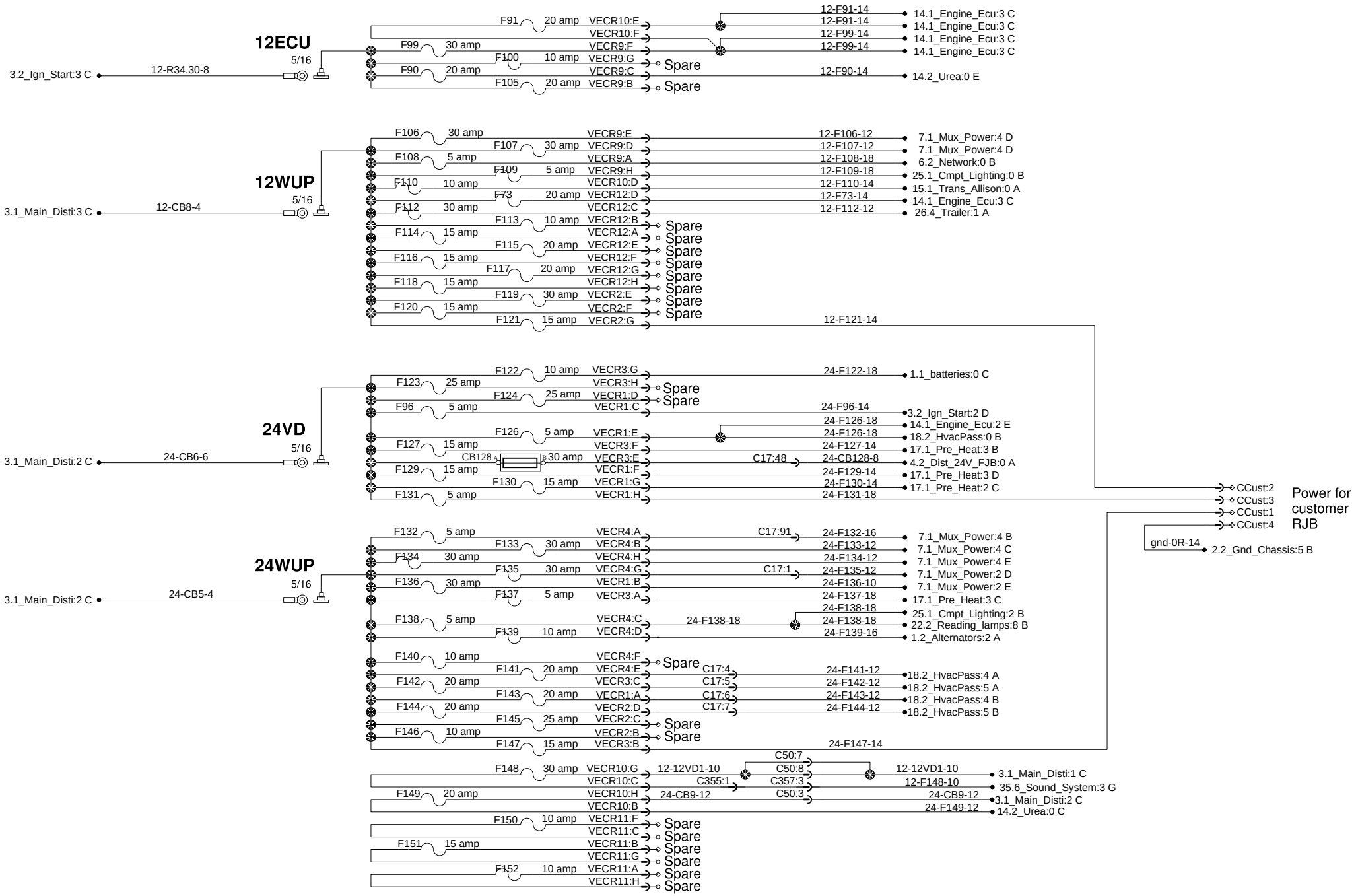

PREVOST®	WIRING DIAGRAM	No:D061640	Page:5.1	Rev:16

Power distribution rear junction box

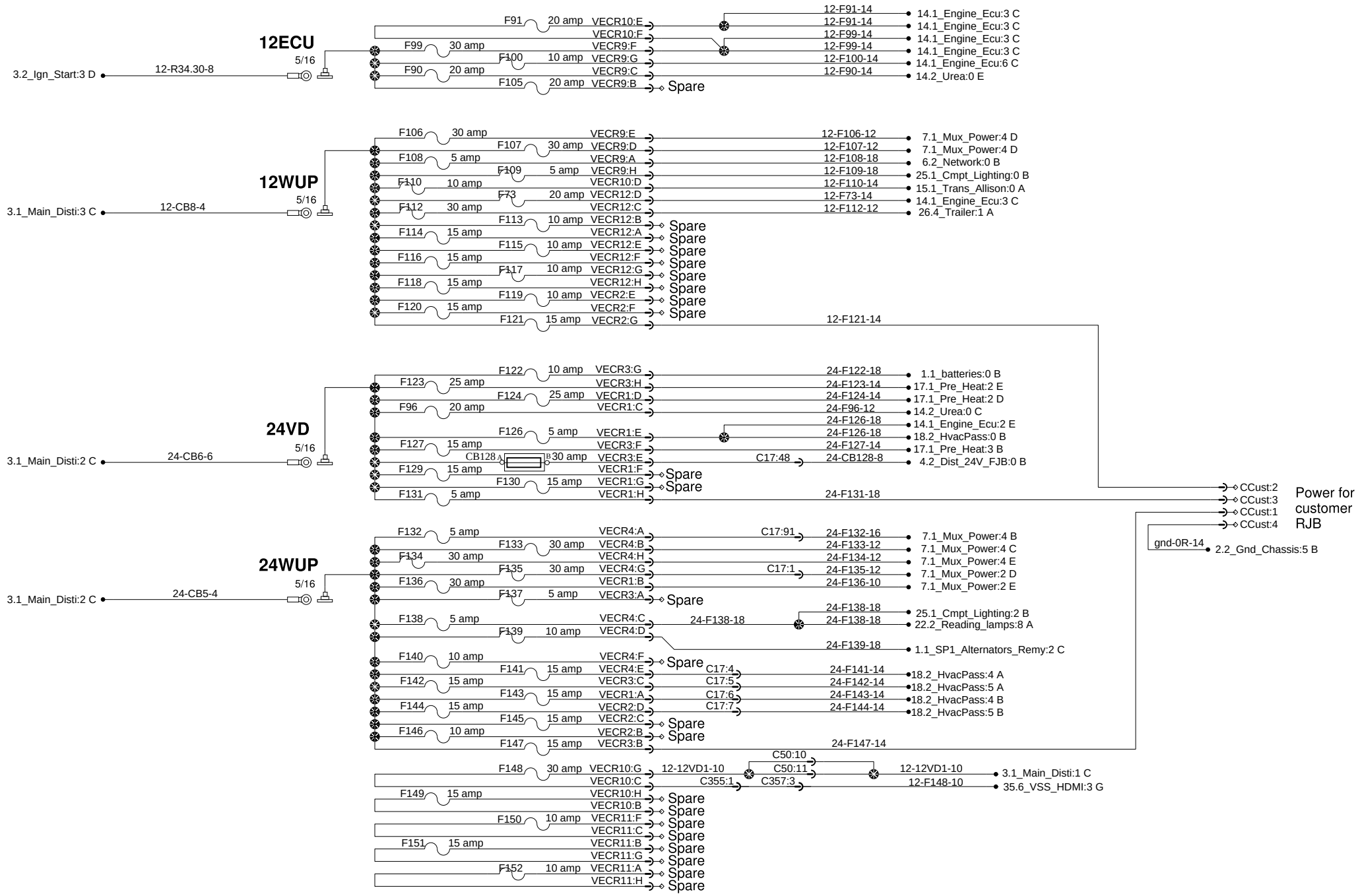

PREVOST®	WIRING DIAGRAM	No:D061640	Page:5.1 SP1	Rev:0

Power distribution rear junction box

Customer Adapation - Rear Galley

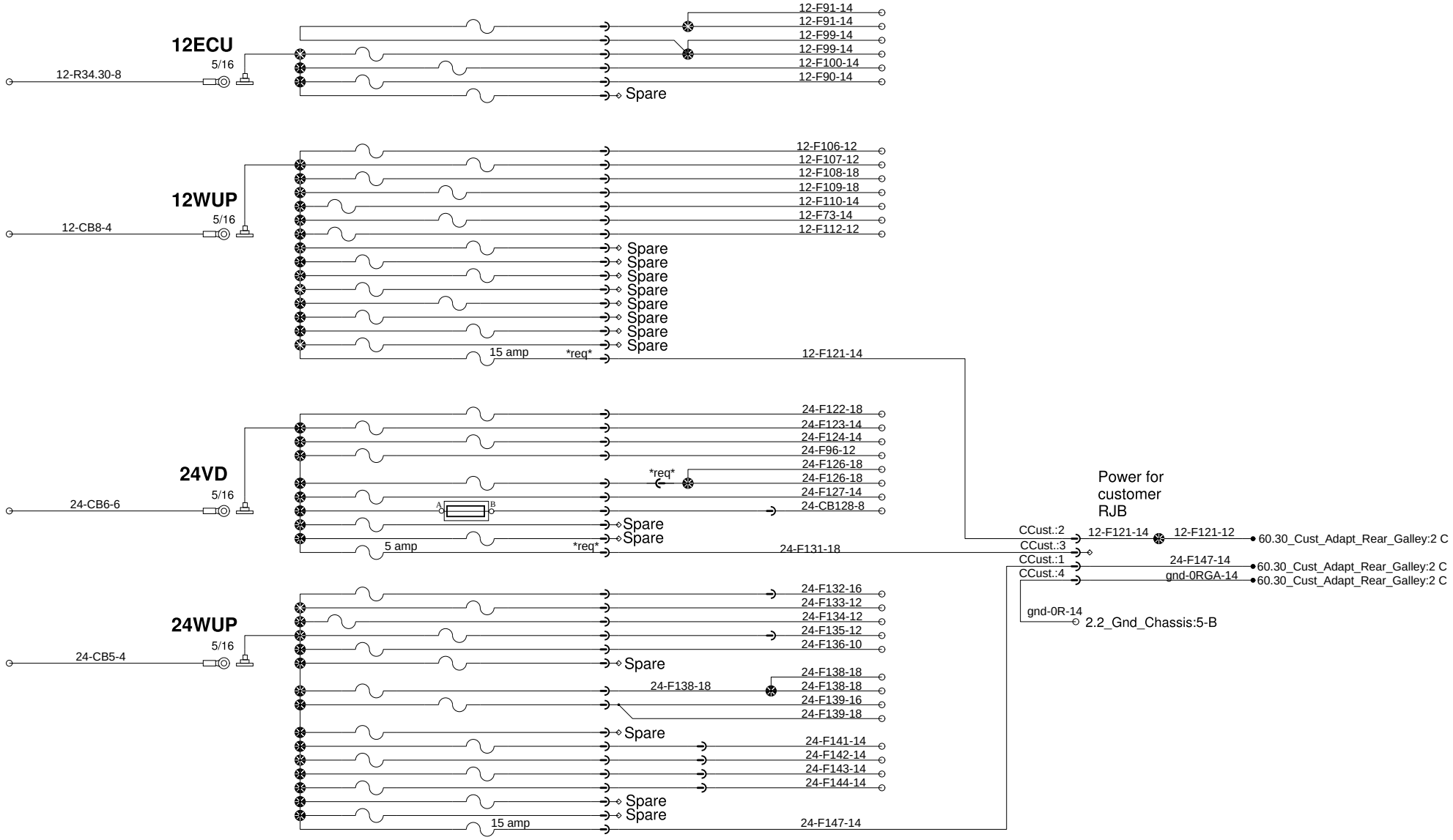

PREVOST®	WIRING DIAGRAM	No:D061640	Page:5.1 SP2	Rev:00

ISM Parcel Rack

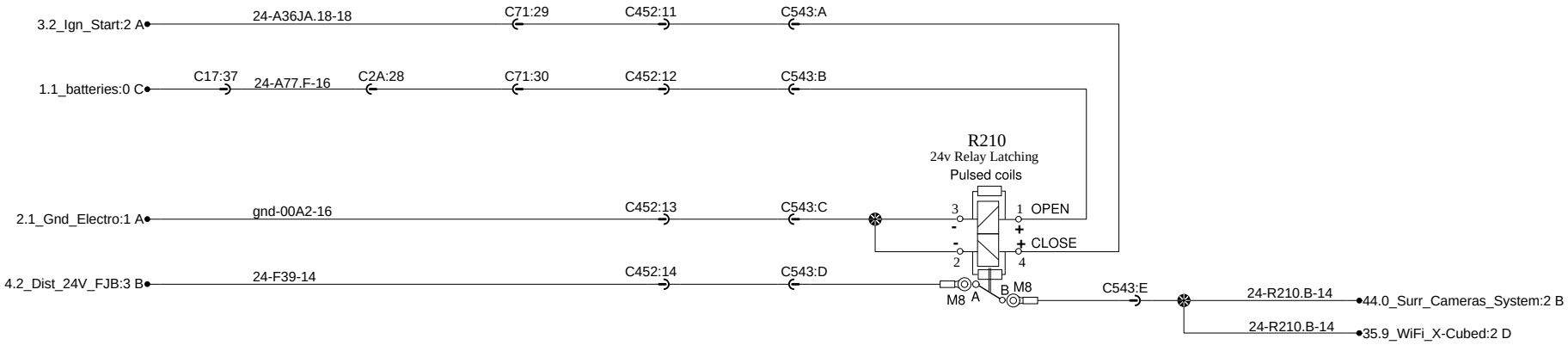

ISM PARCEL RACK WITH TIMER

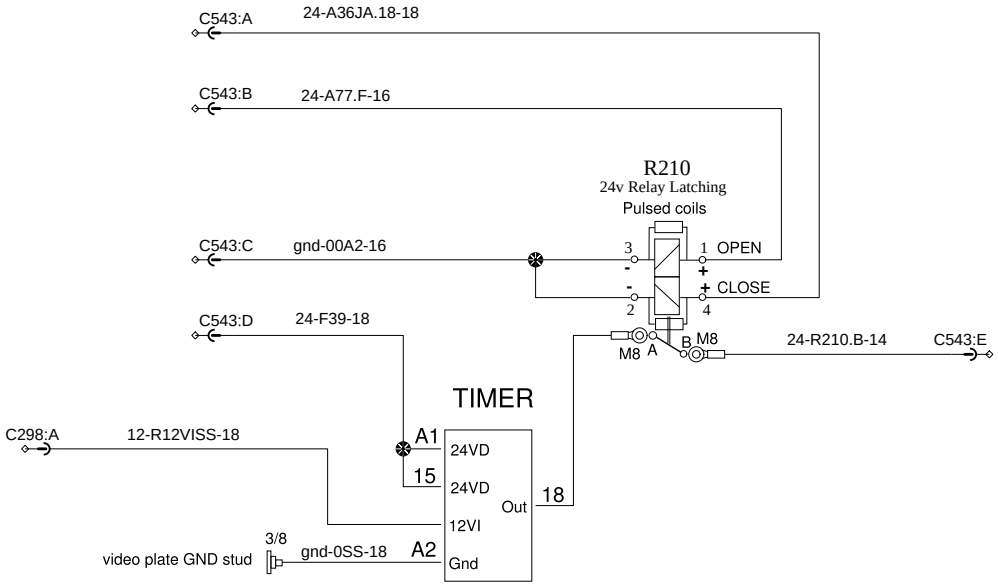

PREVOST®	WIRING DIAGRAM	No:D061640	Page:5.2 SP1	Rev:01

Multiplex Can, J1587, 1939 network and addressing

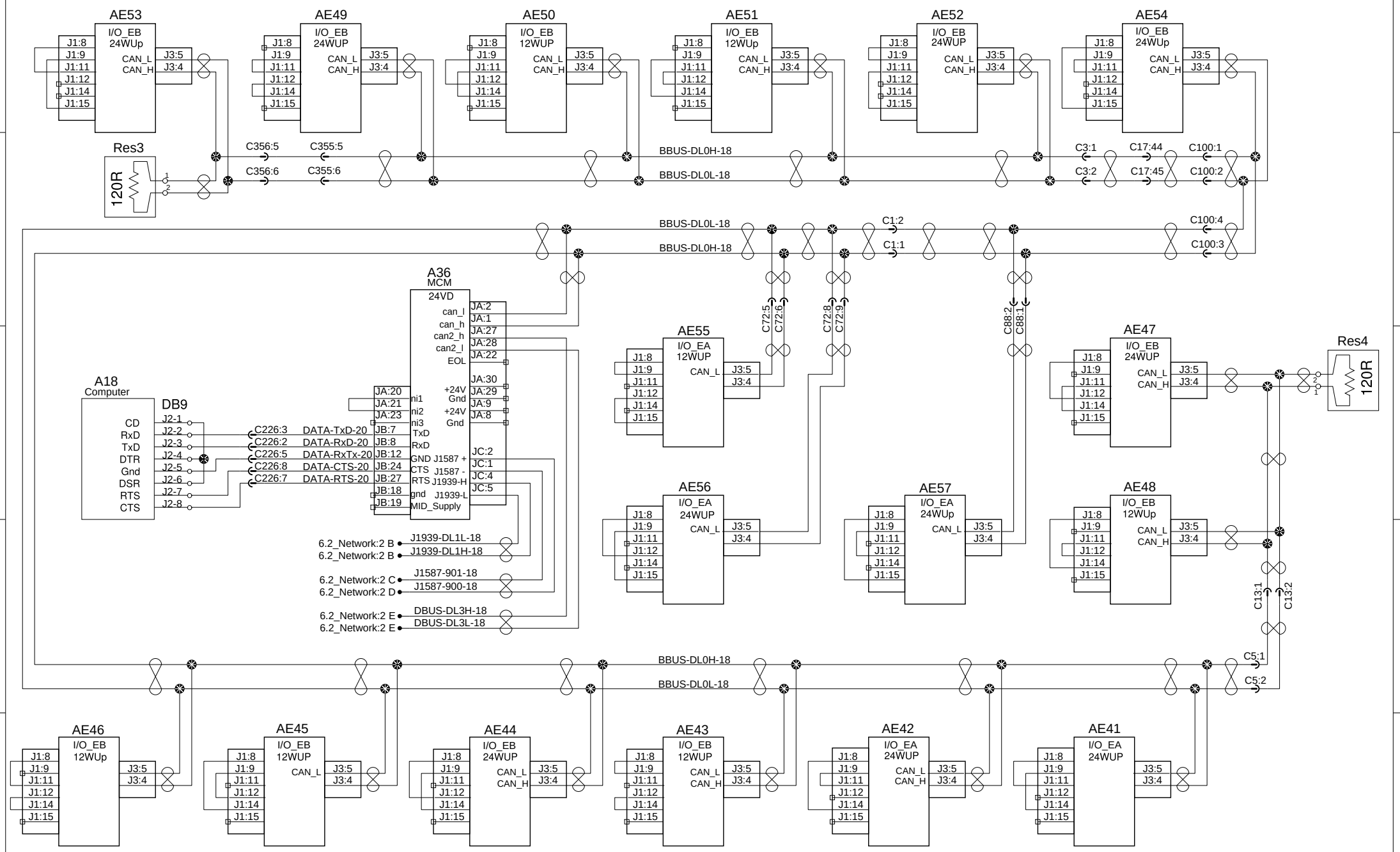

PREVOST®	WIRING DIAGRAM	No:D061640	Page:6.1	Rev:0

J1939, Can Iso J2284, J1587 and DBUS

Open C194 and connect C194spA and C194spB to connect Vansco gateway.

J1939

42.4_ELD_ITS_Gateway:5 C
42.4_ELD_ITS_Gateway:5 C
16.1_ESP:2 B
16.1_ESP:2 B
37.1_VLink_ADryer:3 B
37.1_VLink_ADryer:3 B
6.1_MuxNetwork:1 D
6.1_MuxNetwork:1 D
14.1_Engine_Ecu:5 C
14.1_Engine_Ecu:5 C
15.2_Trans_IShift:3 D
15.2_Trans_IShift:3 D
15.2_Trans_IShift:2 D
15.2_Trans_IShift:2 D
39.1_TPMS_ACB:2 D
39.1_TPMS_ACB:2 D

J1939-DL1H-18 — 15.2_Trans_IShift:3 A
J1939-DL1L-18 — 15.2_Trans_IShift:3 A
or
J1939-DL1H-18 — 15.1_Trans_Allison:2 B
J1939-DL1L-18 — 15.1_Trans_Allison:2 B

14.1_Engine_Ecu:3 D — J1939-DL1H-18
14.1_Engine_Ecu:3 D — J1939-DL1L-18
C193:1 — C17:41
C193:2 — C17:42
C194:1
C194:2
14.2_Urea:0 D
14.2_Urea:0 D
14.2_Urea:0 D
14.2_Urea:0 D

39.1_TPMS_ACB:2 E
39.1_TPMS_ACB:2 E
C74:34
C74:27
10.1_Cluster:4 C
10.1_Cluster:4 C
Res7
120R
563593

C464A OBD Conn RJB

C464A:3 — J1939-DL1H-18
C464A:11 — J1939-DL1L-18
C464A:16 — 12-F108-18 — 5.1_Dist_RJB:2 B
C464A:5 — gnd-00R-18 — 2.1_Gnd_Electro:1 F
C464A:4 — gnd-00R-18
C464A:1 — 12-F30-18 — 4.1_Dist_12V_FJB:2 C
C464A:14 — J2284-DL2L-18
C464A:6 — J2284-DL2H-18
C464A:13
C464A:12

Can Iso J2284

15.1_Trans_Allison:1 B — J2284-DL2H-18
15.1_Trans_Allison:1 B — J2284-DL2L-18
14.2_Urea:0 C — C2A:11
14.2_Urea:0 C — C2A:12

C380A OBD Conn Dash

J1939-DL1L-18 — C380A:11
J1939-DL1H-18 — C380A:3
4.1_Dist_12V_FJB:2 A — 12-F10-18 — C380A:16
2.1_Gnd_Electro:1 B — gnd-00A-18 — C380A:4
4.1_Dist_12V_FJB:2 C — 12-F30-18 — C380A:5
C380A:1
C71:18 — J2284-DL2H-18 — C380A:6
C71:17 — J2284-DL2L-18 — C380A:14
C380A:13
C380A:12

37.1_VLink_ADryer:3 B
37.1_VLink_ADryer:3 B
15.1_Trans_Allison:1 B
15.1_Trans_Allison:1 B

Res53
120R
563593

15.2_Trans_IShift:1 B
15.2_Trans_IShift:1 B

15.2_Trans_IShift:1 B — 15.1_Trans_Allison:2 B
15.2_Trans_IShift:1 B — 15.1_Trans_Allison:2 B

Trans Allison only

14.1_Engine_Ecu:3 D
14.1_Engine_Ecu:3 D
C17:61 — 14.2_Urea:0 D
C17:62 — 14.2_Urea:0 C

J1587

J1587-901-18 — C17:47 — C2:25 — C72:32 — J1587-901-18
J1587-900-18 — C17:46 — C2:29 — C72:31 — J1587-900-18

J1587-901-18 — 10.1_Cluster:4 C
J1587-900-18 — 10.1_Cluster:4 C
J1587-901-18 — 42.4_ELD_ITS_Gateway:5 C
J1587-900-18 — 42.4_ELD_ITS_Gateway:5 C
J1587-901-18 — 15.2_Trans_IShift:2 D
J1587-900-18 — 15.2_Trans_IShift:2 D
J1587-901-22 — 37.1_VLink_ADryer:3 B
J1587-900-22 — 37.1_VLink_ADryer:3 B

14.1_Engine_Ecu:5 C — J1587-900-18
14.1_Engine_Ecu:5 C — J1587-901-18
6.1_MuxNetwork:1 D — J1587-900-18
6.1_MuxNetwork:1 D — J1587-901-18

DBUS

A96
ECU BERU
CAN L (HS) — 31
CAN H (HS) — 15
39.1_TPMS_ACB:0 C
39.1_TPMS_ACB:0 C

DBUS-DL3L-18 — C222:2
DBUS-DL3H-18 — C222:1

DBUS-DL3H-18 — C74:31 — C94:1 — C2A:8 — C17:52
DBUS-DL3L-18 — C74:30 — C94:2 — C2A:9 — C17:53

Res6
120R
563593

35.6_VSS_HDMI:3 B
35.6_VSS_HDMI:3 B

A15
CanH 1
CanL 2
12Volts 3
Gnd 4
BackLight 5
Eng_Run_Sig 6
Hvac Module

10.1_Cluster:4 C
10.1_Cluster:4 C

A97
CANTRAK
7
8

41.1_Steering:3 B
41.1_Steering:3 B

6.1_MuxNetwork:1 D
6.1_MuxNetwork:1 D

1.1_batteries:0 B
1.1_batteries:0 B

NETWORKS

DL0 - BBUS MUX
DL1 - J1939
DL2 - J2284
DL3 - DBUS MUX
DL7 - ENGINE SUBNET
DL9 - POWER TRAIN SUBNET

PREVOST®	WIRING DIAGRAM	No:D061640	Page:6.2	Rev:0

J1939, Can Iso J2284, J1587 and DBUS

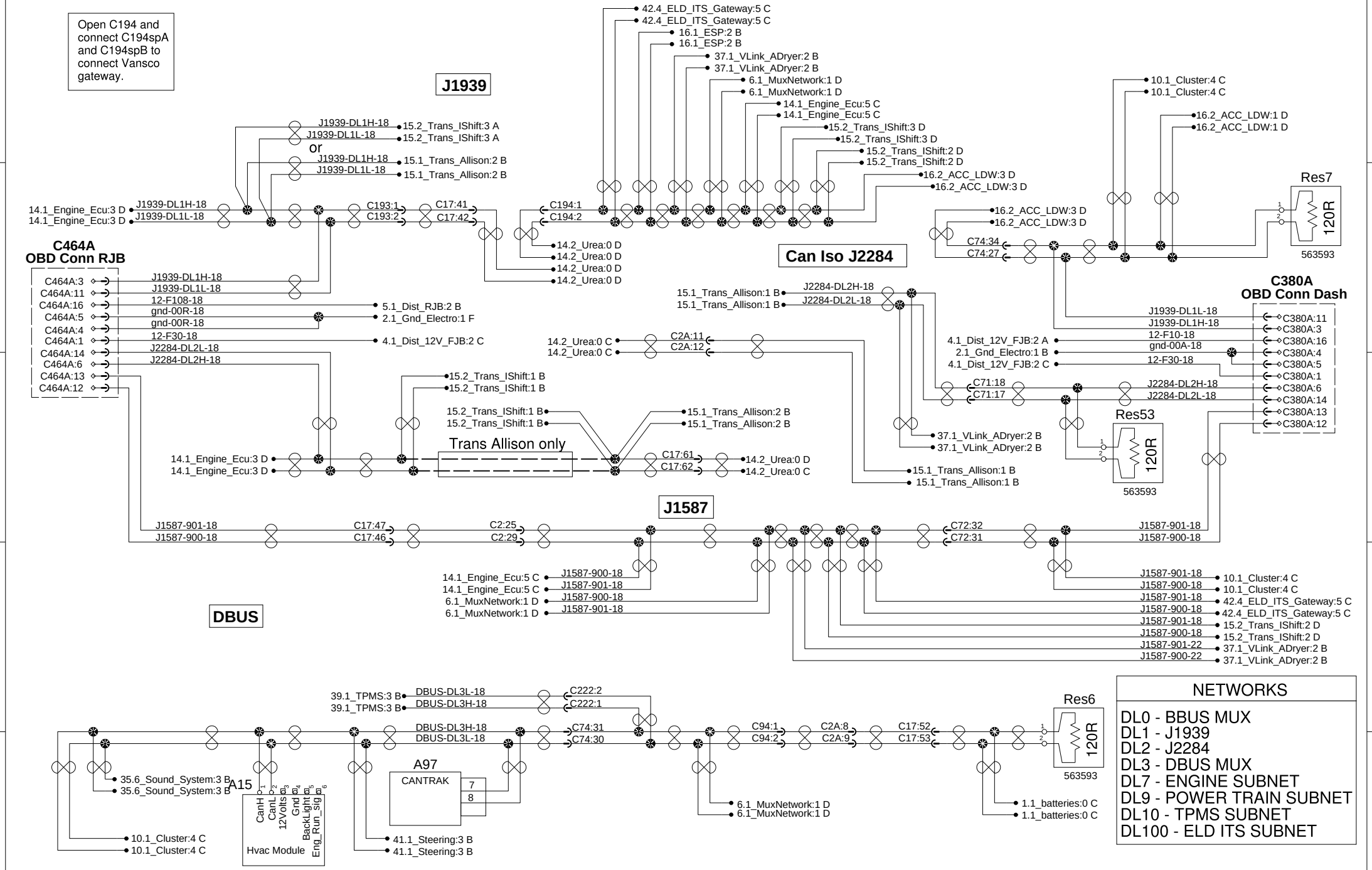

PREVOST®

WIRING DIAGRAM

No:D061640

Page:6.2

Rev:13

J1939, Can Iso J2284, J1587 and DBUS

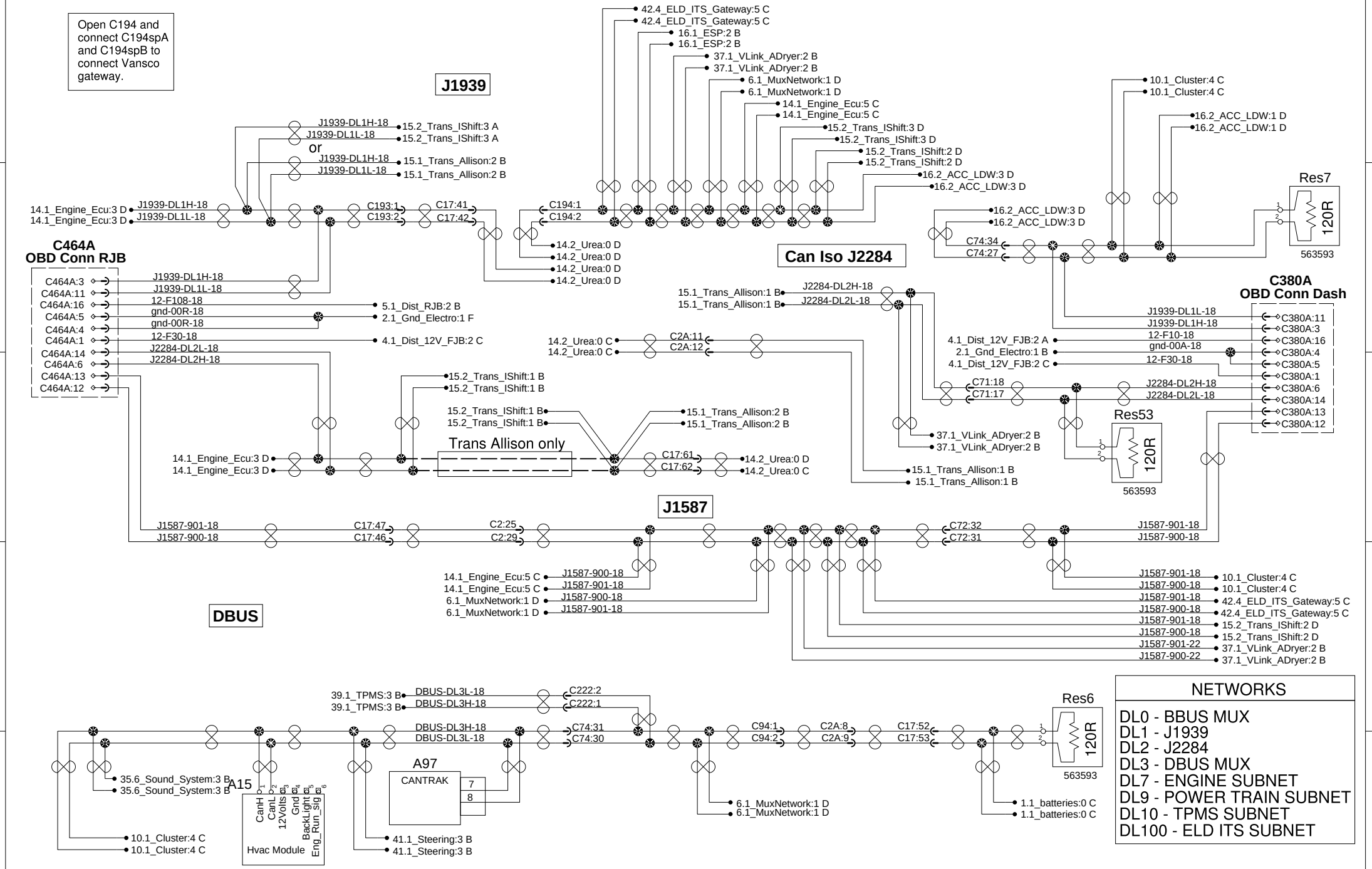

PREVOST®	WIRING DIAGRAM	No:D061640	Page:6.2	Rev:15

J1939, Can Iso J2284, J1587 and DBUS

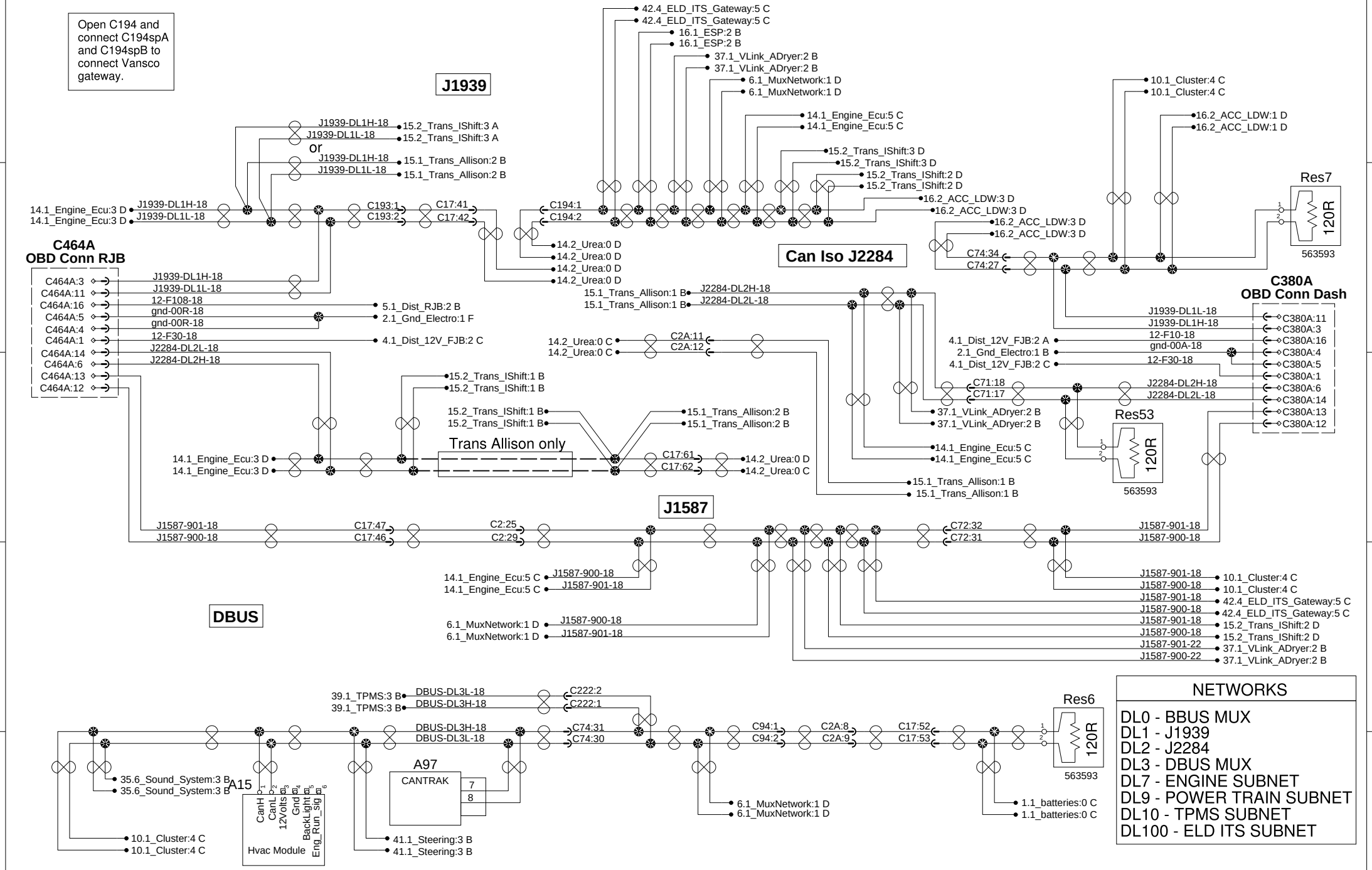

PREVOST®

WIRING DIAGRAM

No:D061640

Page:6.2

Rev:16

J1939, Can Iso J2284, J1587 and DBUS

Open C194 and connect C194spA and C194spB to connect Vansco gateway.

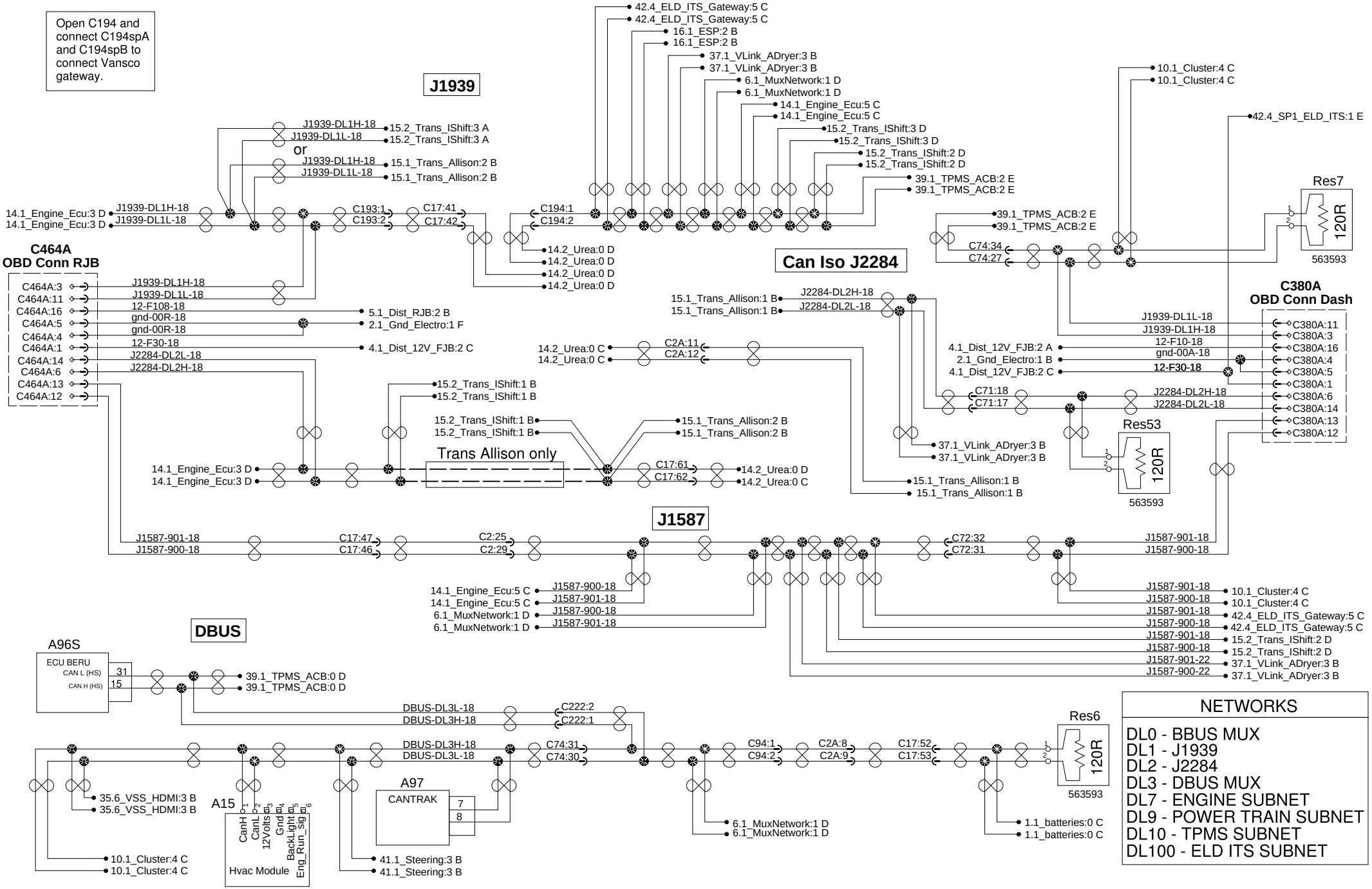

NETWORKS

- DL0 - BBUS MUX
- DL1 - J1939
- DL2 - J2284
- DL3 - DBUS MUX
- DL7 - ENGINE SUBNET
- DL9 - POWER TRAIN SUBNET
- DL10 - TPMS SUBNET
- DL100 - ELD ITS SUBNET

Multiplex power supply distribution

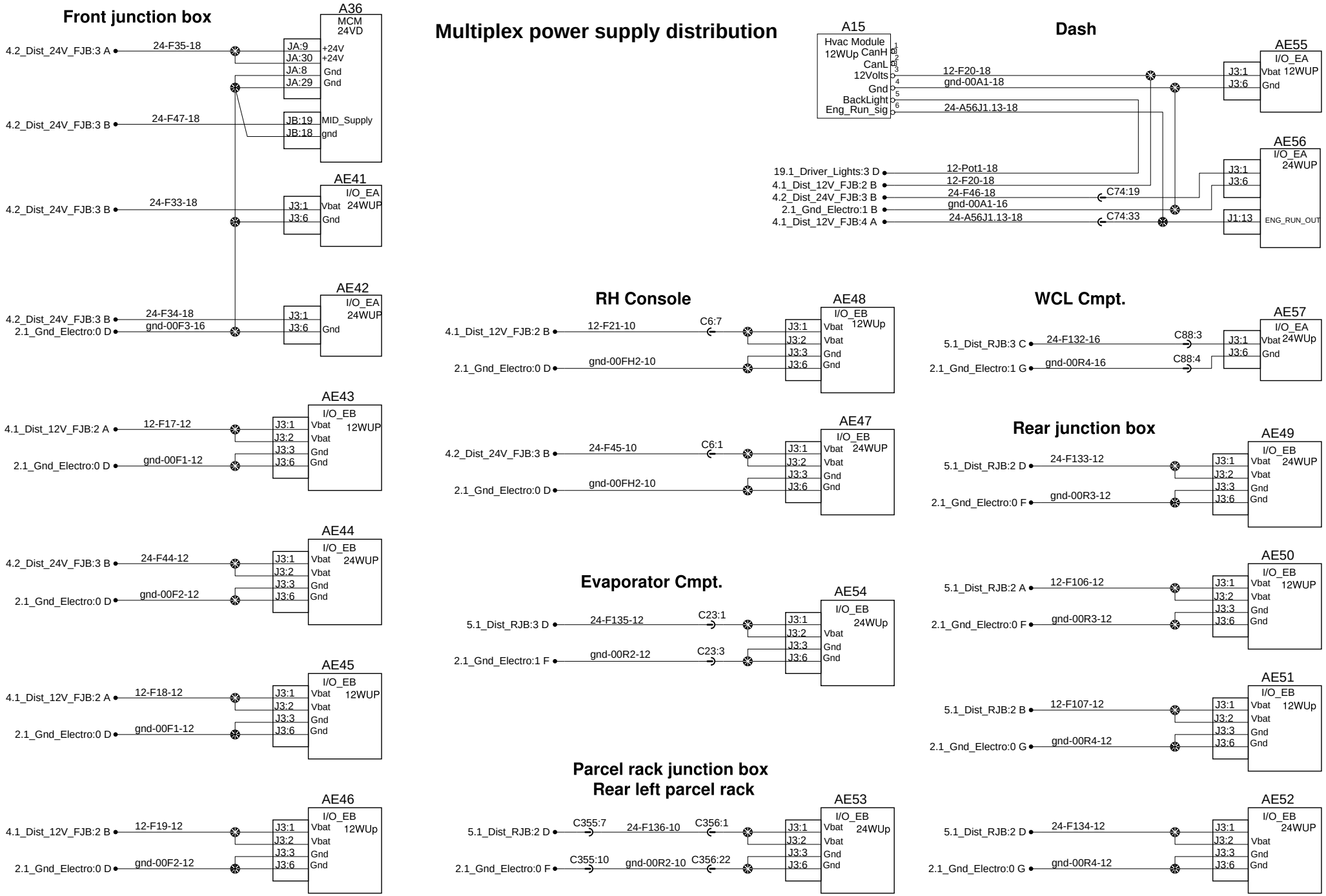

PREVOST®	WIRING DIAGRAM	No:D061640	Page:7.1	Rev:0

Spares wires

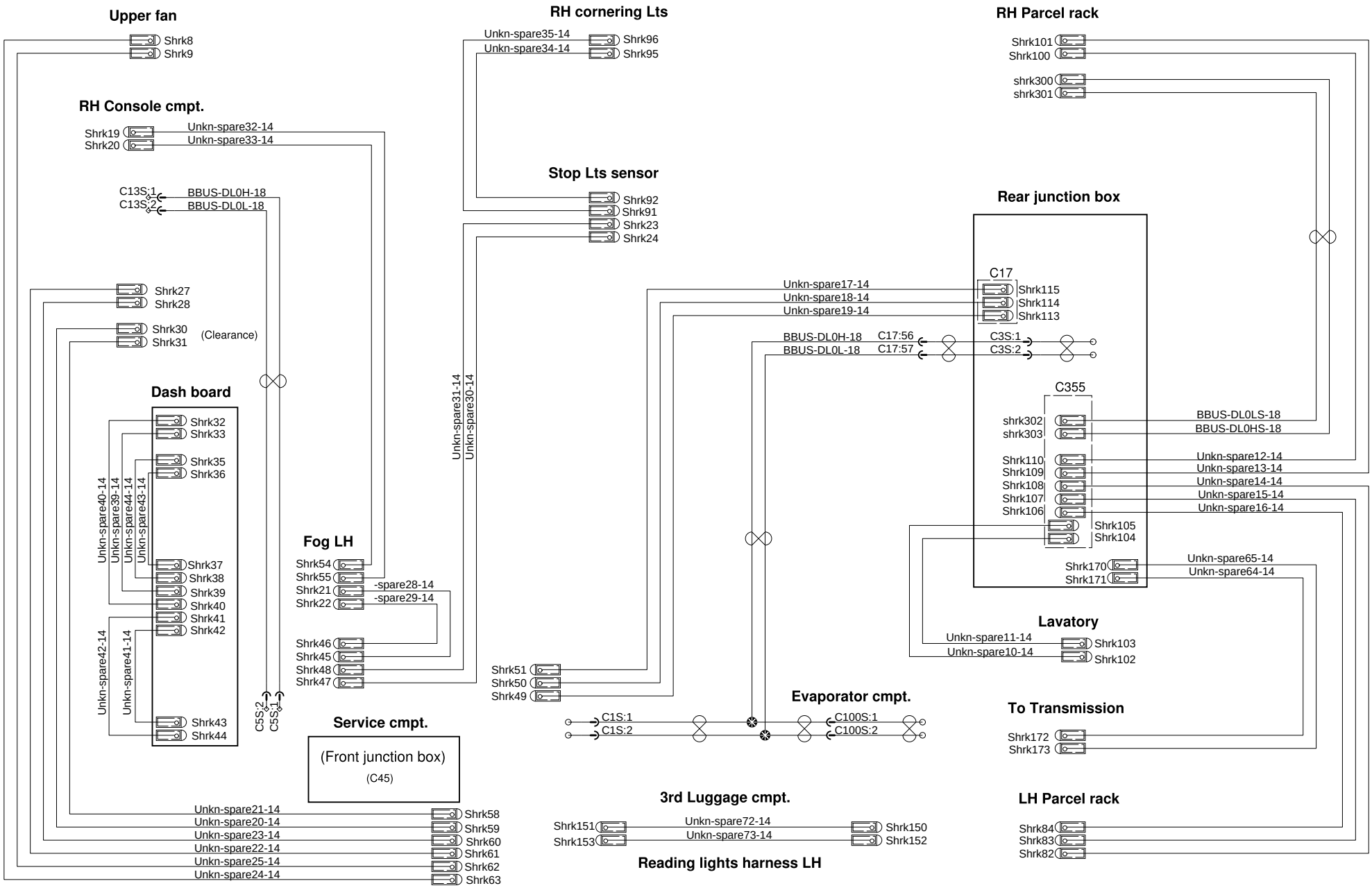

PREVOST®	WIRING DIAGRAM	No:D061640	Page:8.1	Rev:0

Spares wires

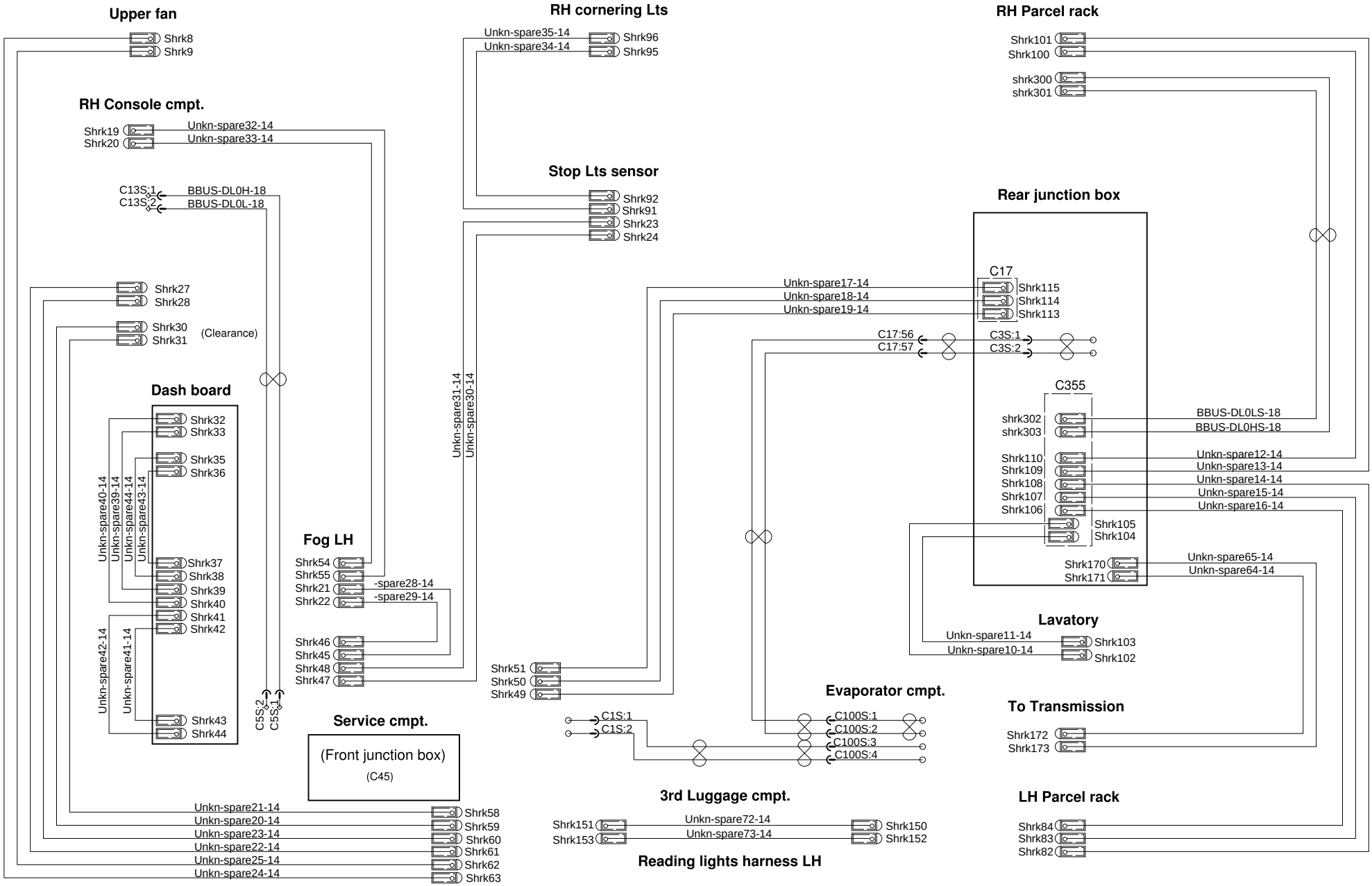

PREVOST®	WIRING DIAGRAM	No:D061640	Page:8.1	Rev:8

Horn

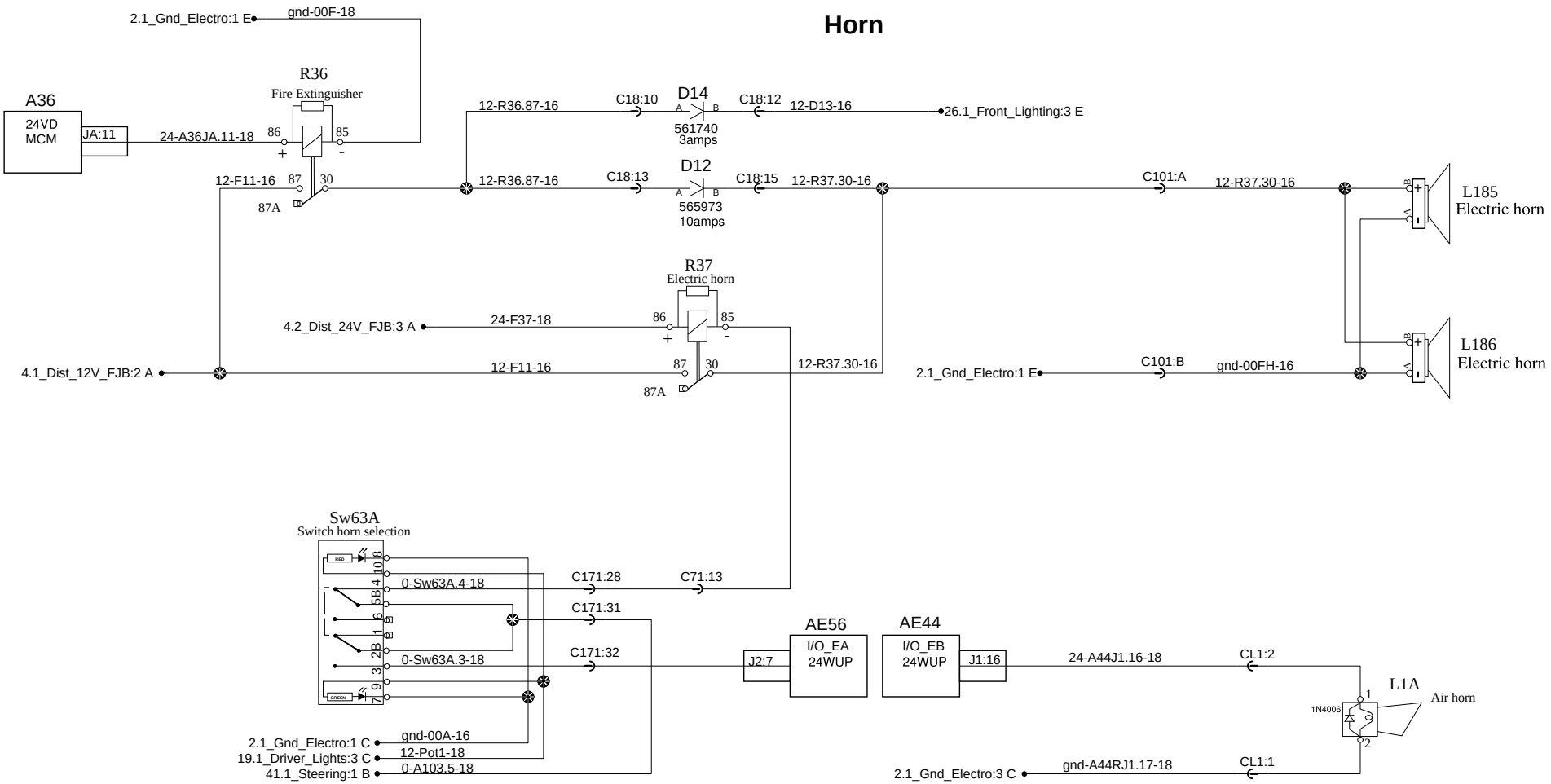

PREVOST®	WIRING DIAGRAM	No:D061640	Page:9.1	Rev:0

Cluster

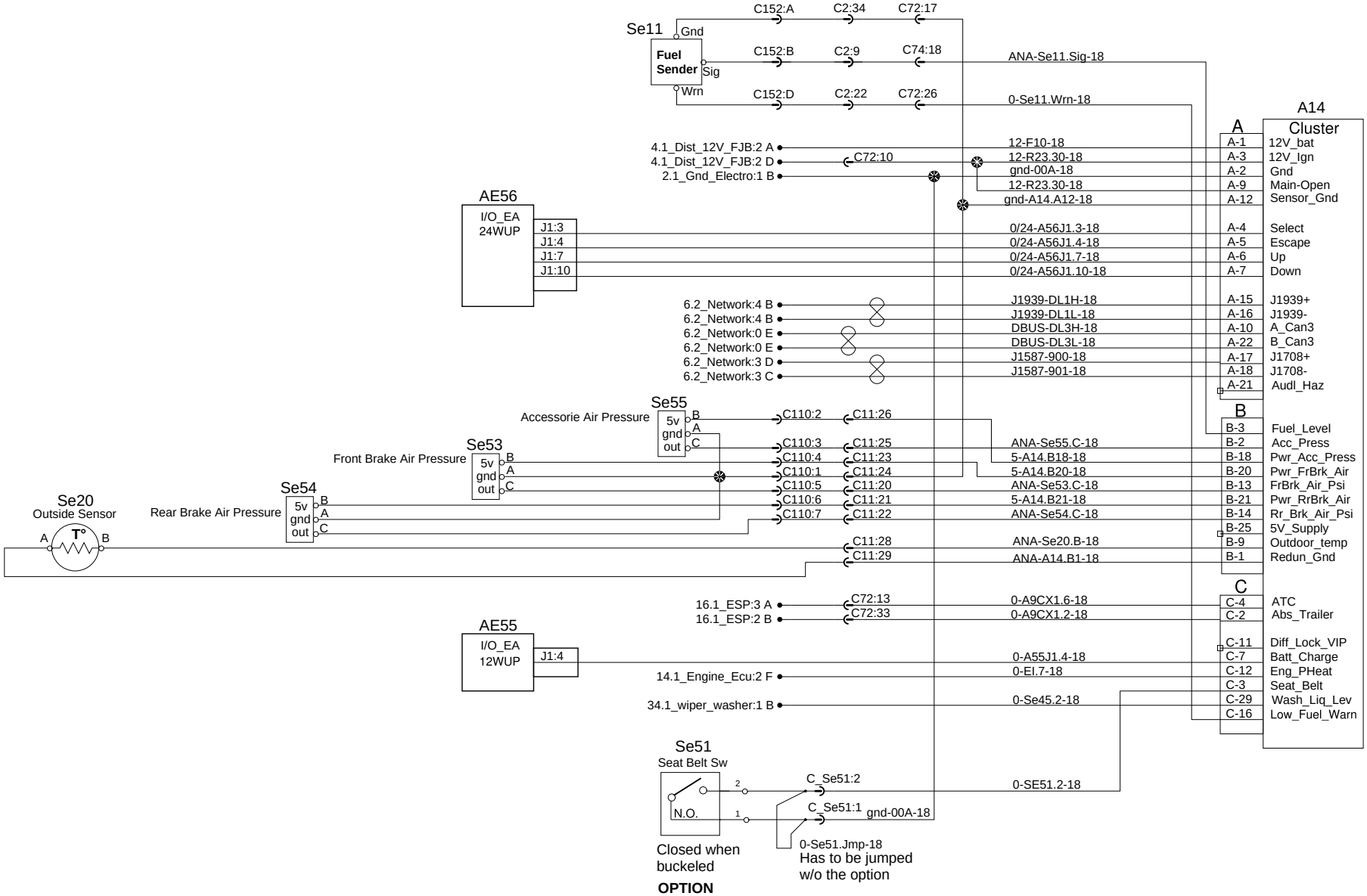

PREVOST®	WIRING DIAGRAM	No:D061640	Page:10.1	Rev:0

Cluster

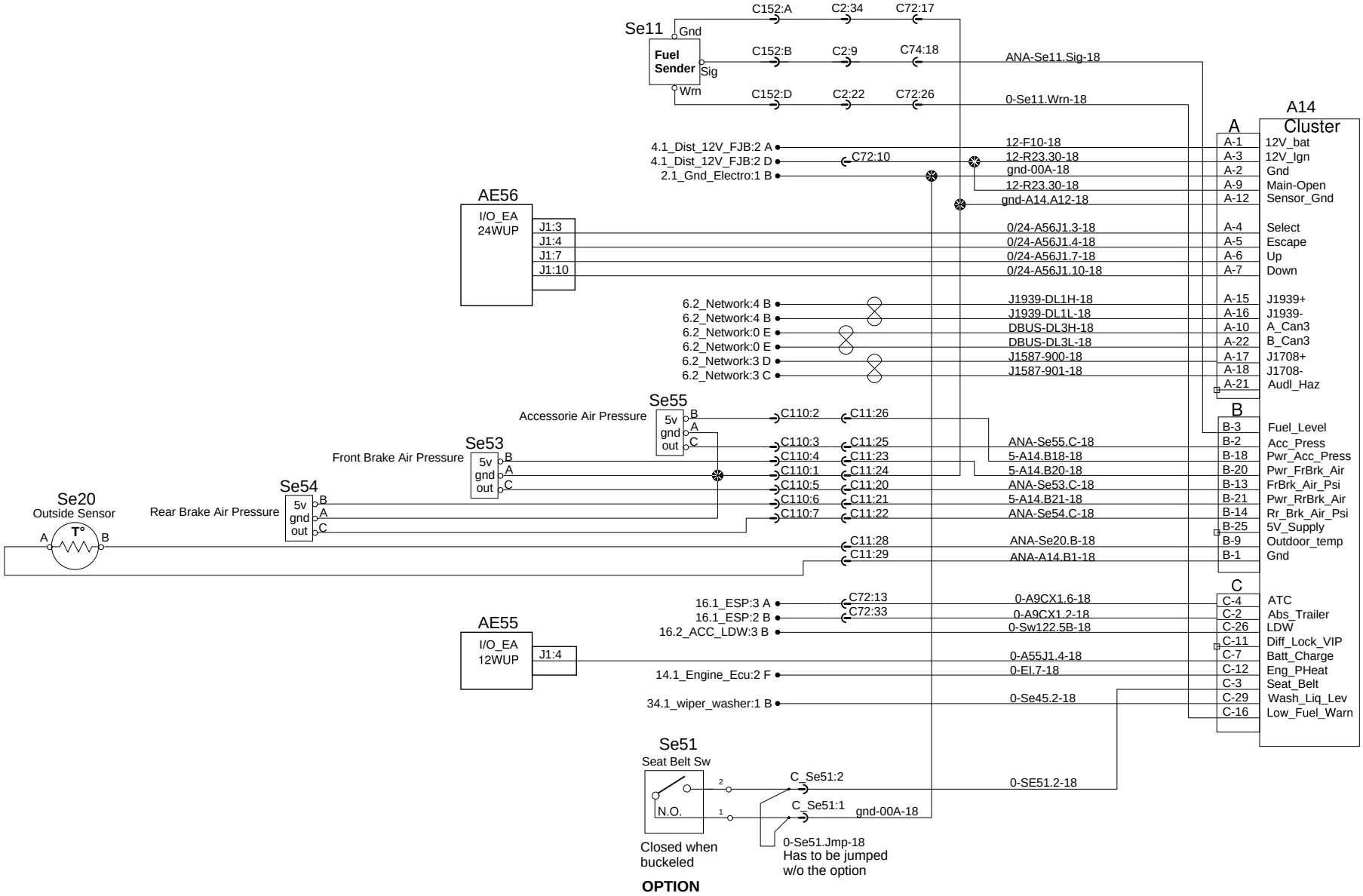

PREVOST®	WIRING DIAGRAM	No:D061640	Page:10.1	Rev:15

Lavatory and No Smoking sign

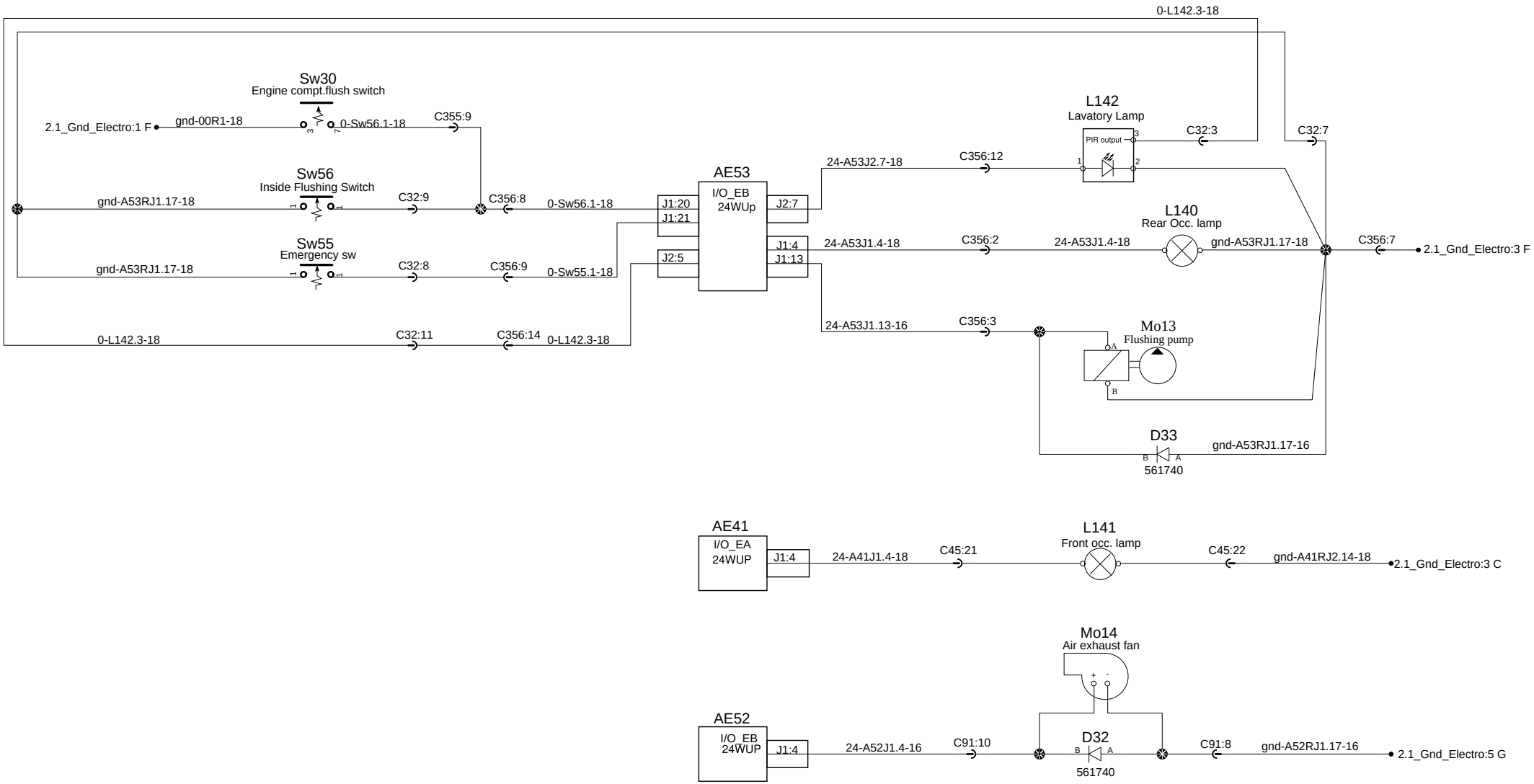

PREVOST®	WIRING DIAGRAM	No:D061640	Page:11.1	Rev:0

Lavatory and No Smoking sign

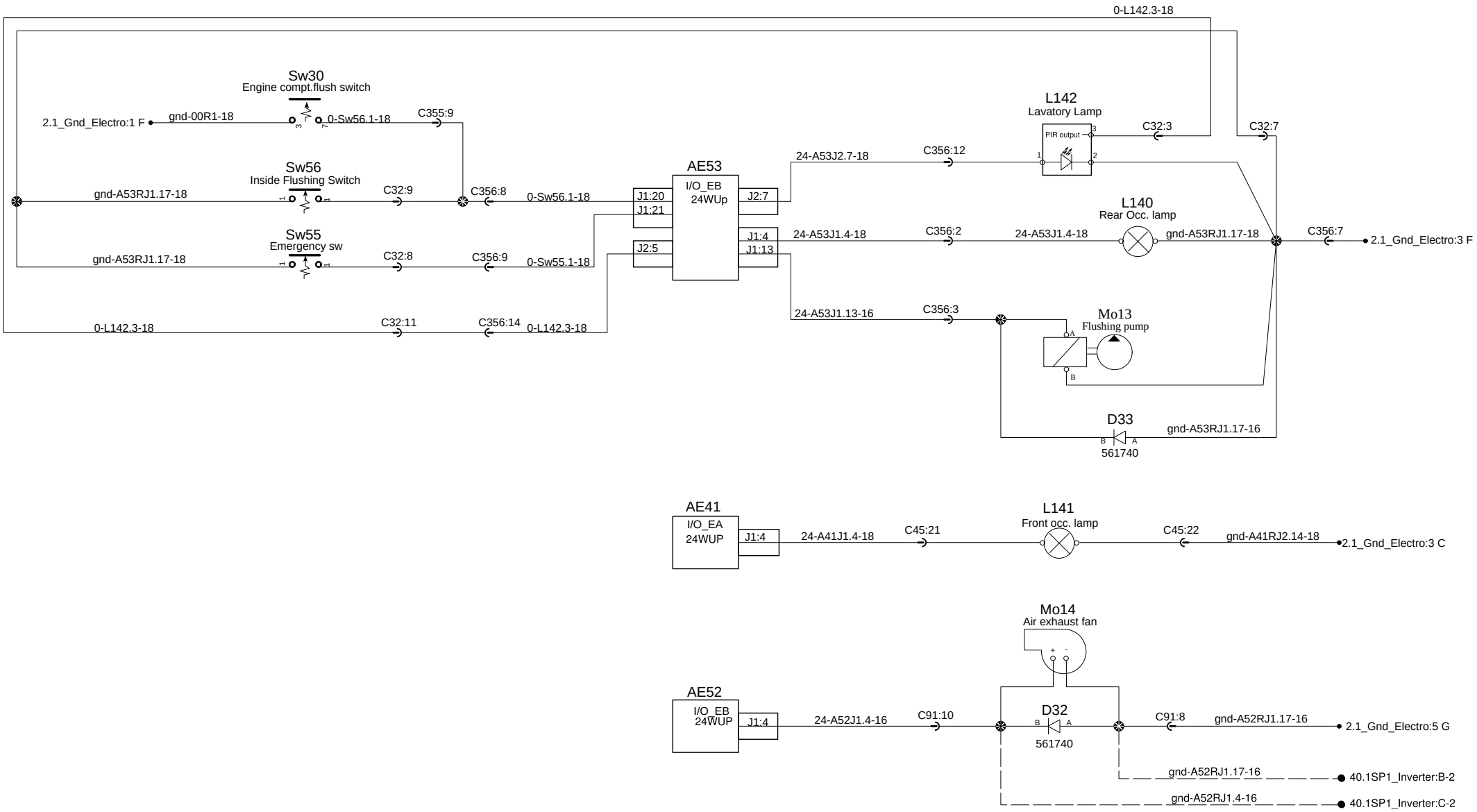

PREVOST®	WIRING DIAGRAM	No:D061640	Page:11.1 SP1	Rev:0

Brake, Engine brake and Retarder

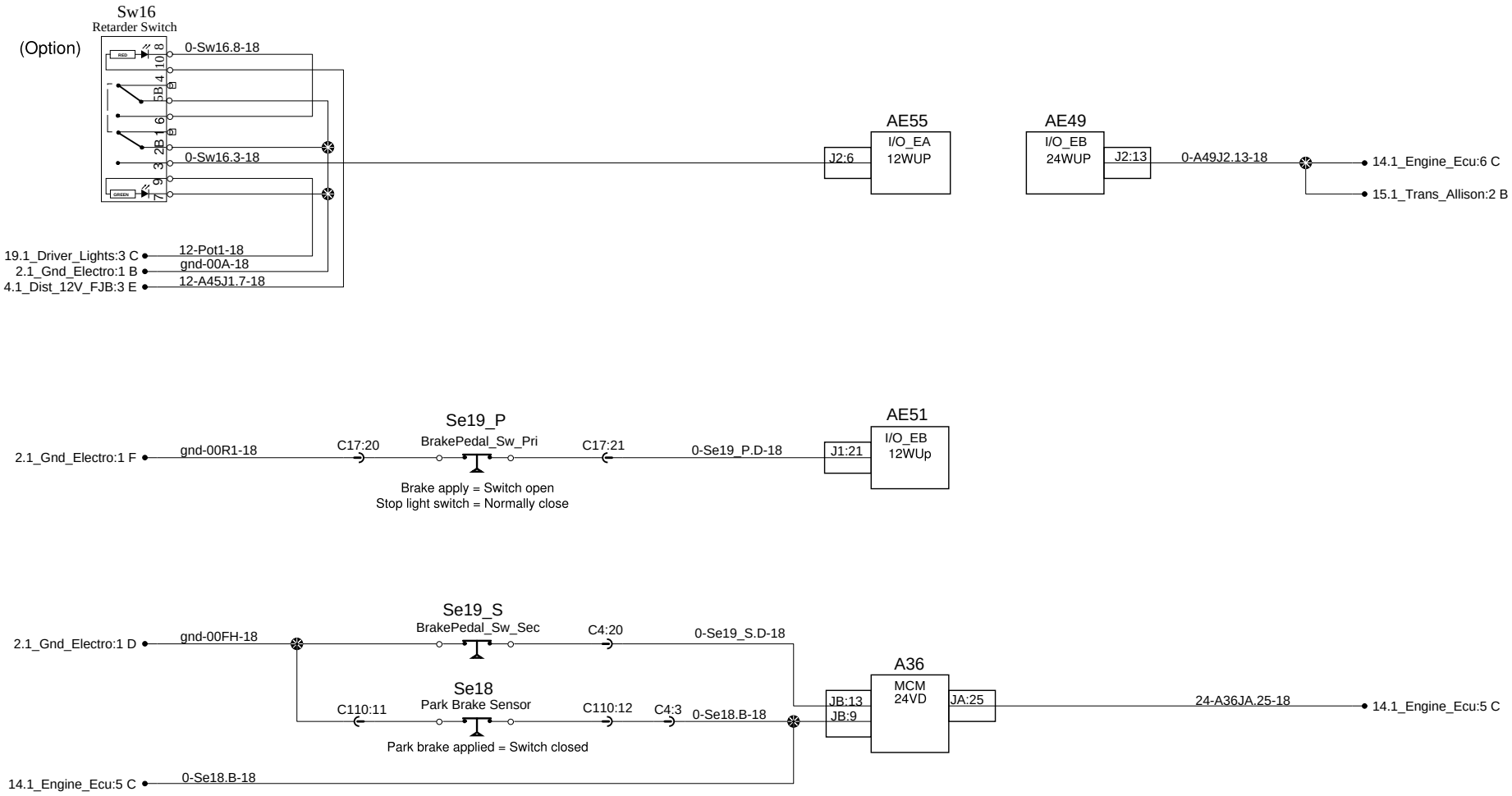

PREVOST®	WIRING DIAGRAM	No:D061640	Page:12.1	Rev:0

Brake, Engine brake and Retarder

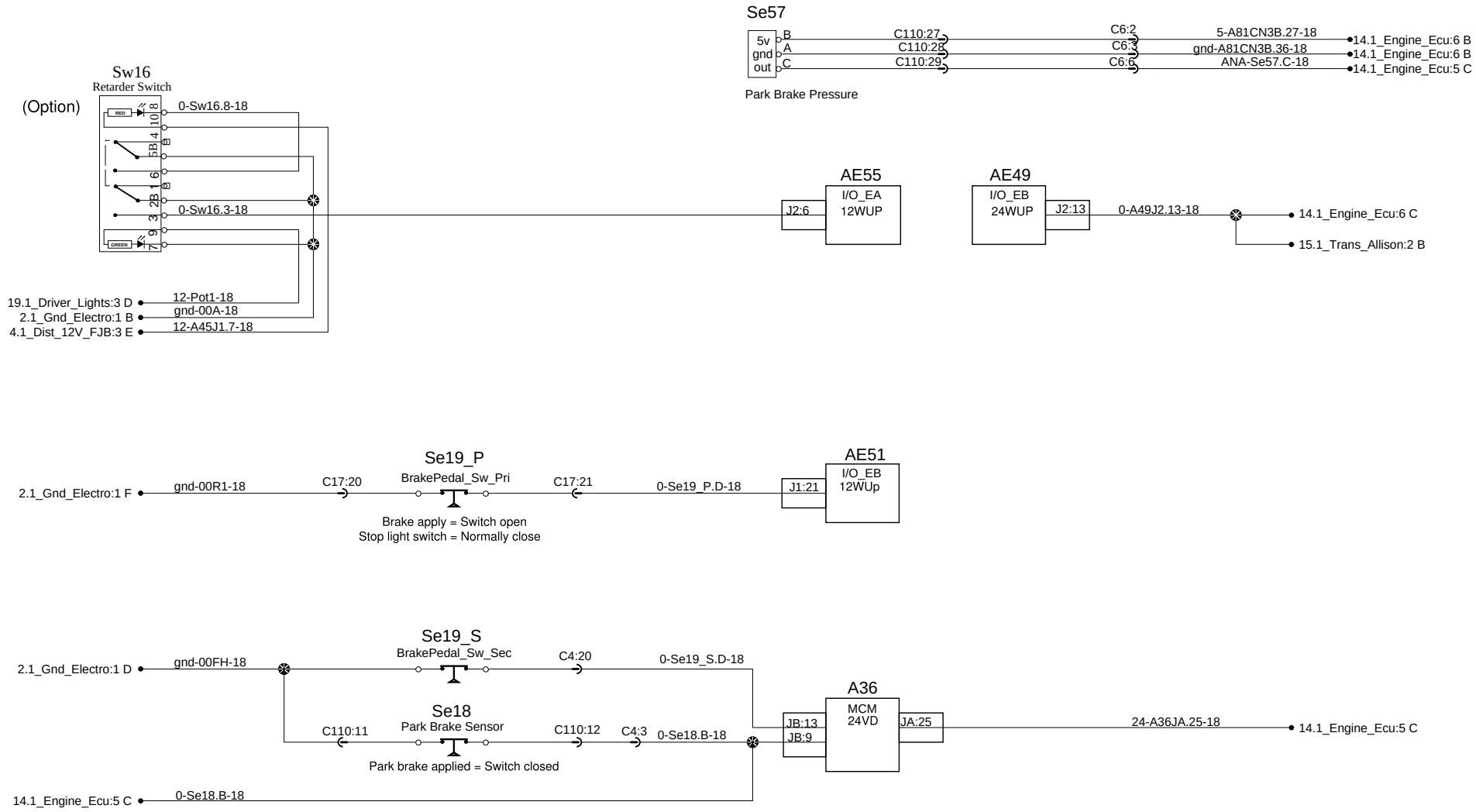

PREVOST®	WIRING DIAGRAM	No:D061640	Page:12.1	Rev:16

Trailler park brake

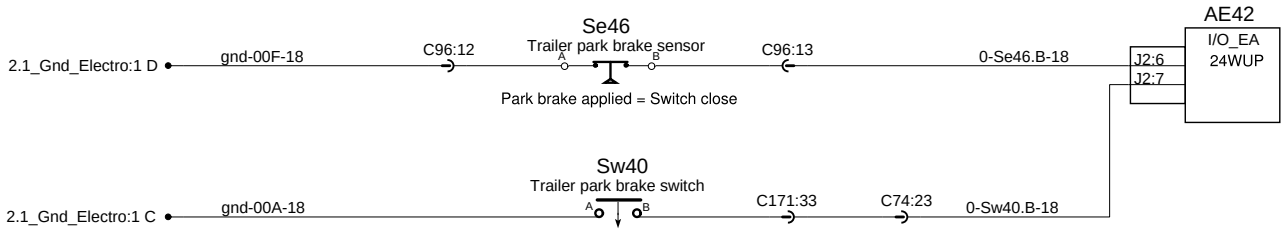

Electric fans drive

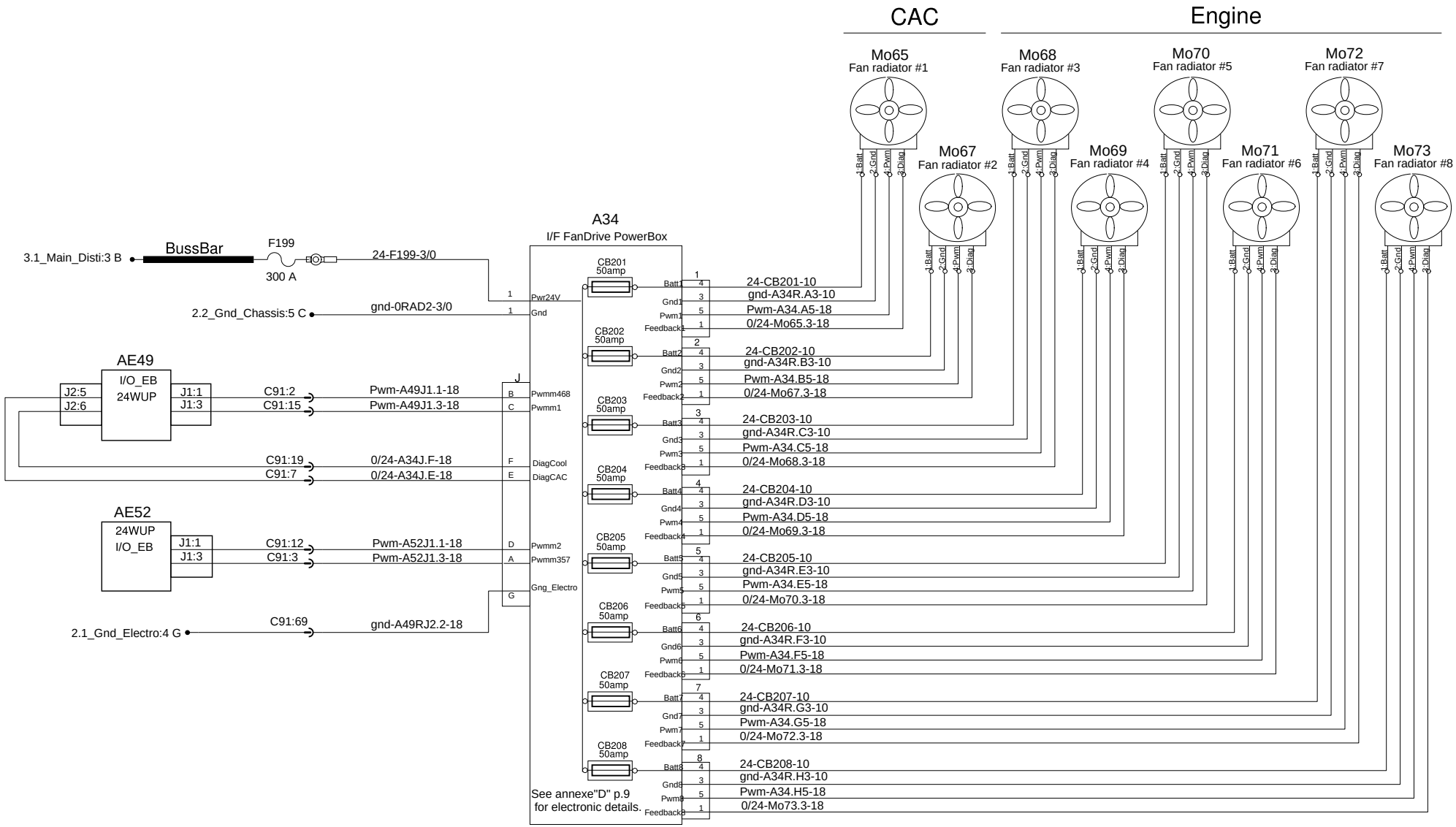

PREVOST®	WIRING DIAGRAM	No:D061640	Page:13.1	Rev:0

Engine ECU Volvo

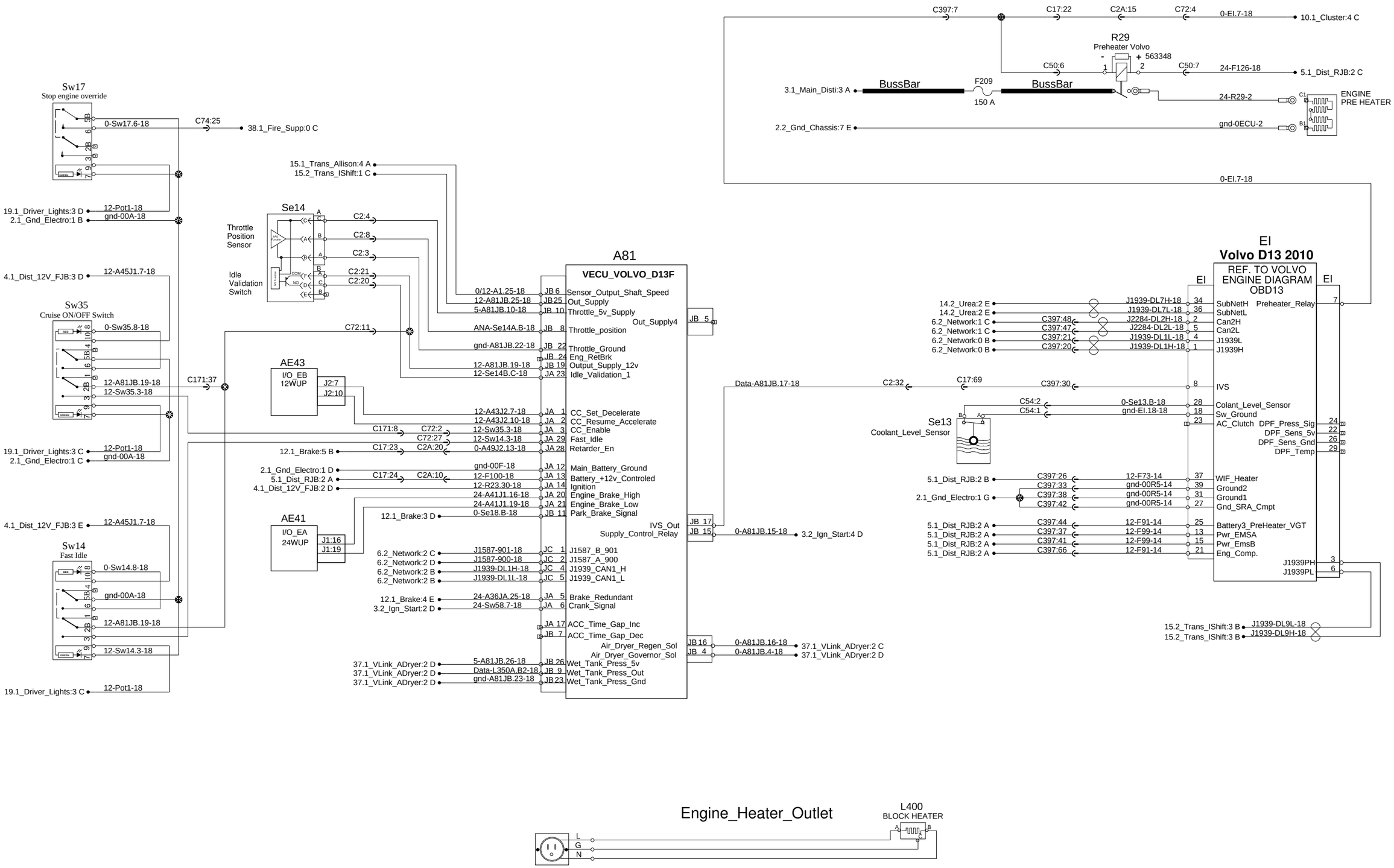

Rev:0

Page:14.1

No:D061640

WIRING DIAGRAM

PREVOST

Engine ECU Volvo

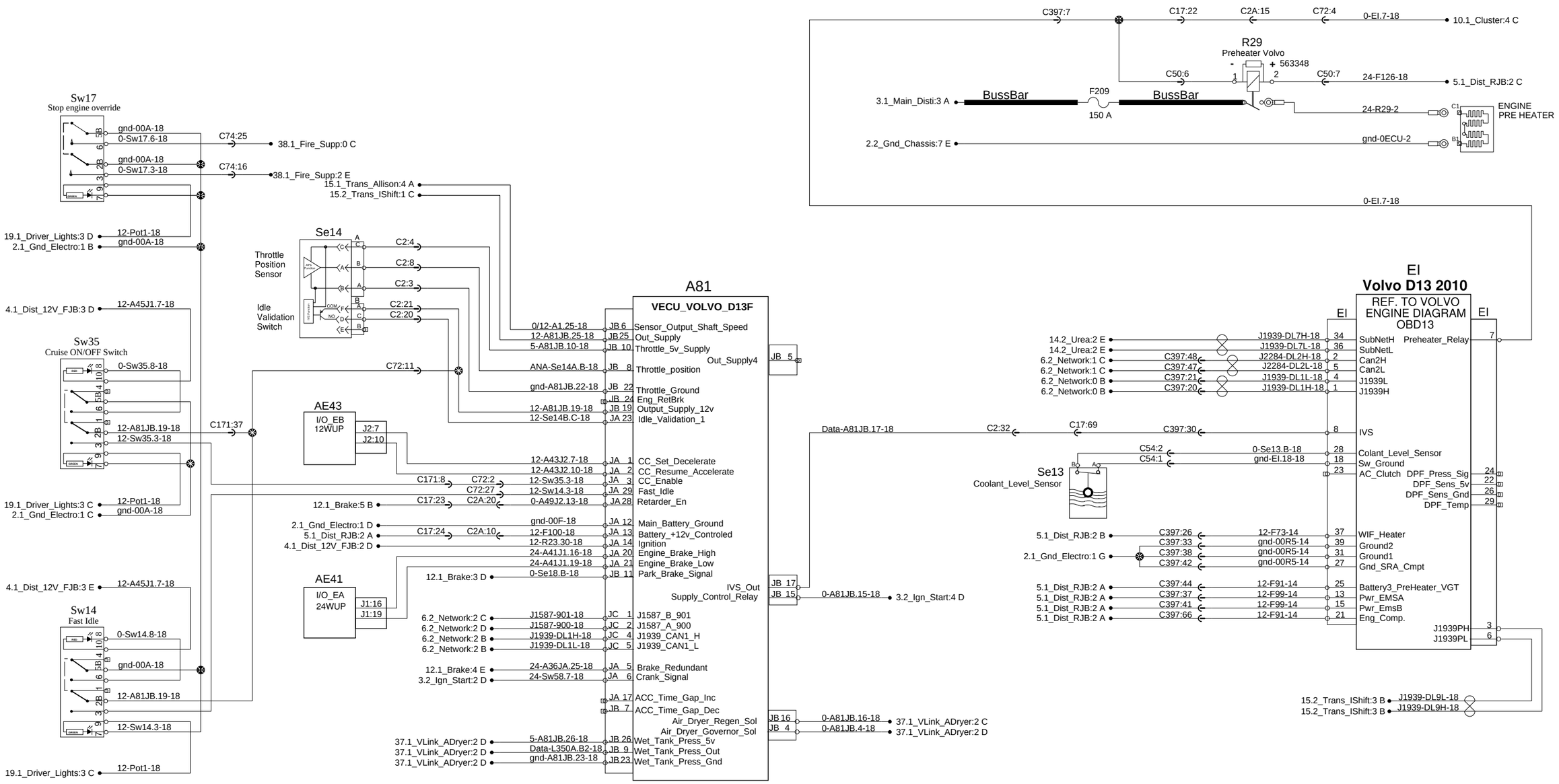

Rev:8

Page:14.1

No:D061640

WIRING DIAGRAM

PREVOST

Engine ECU Volvo

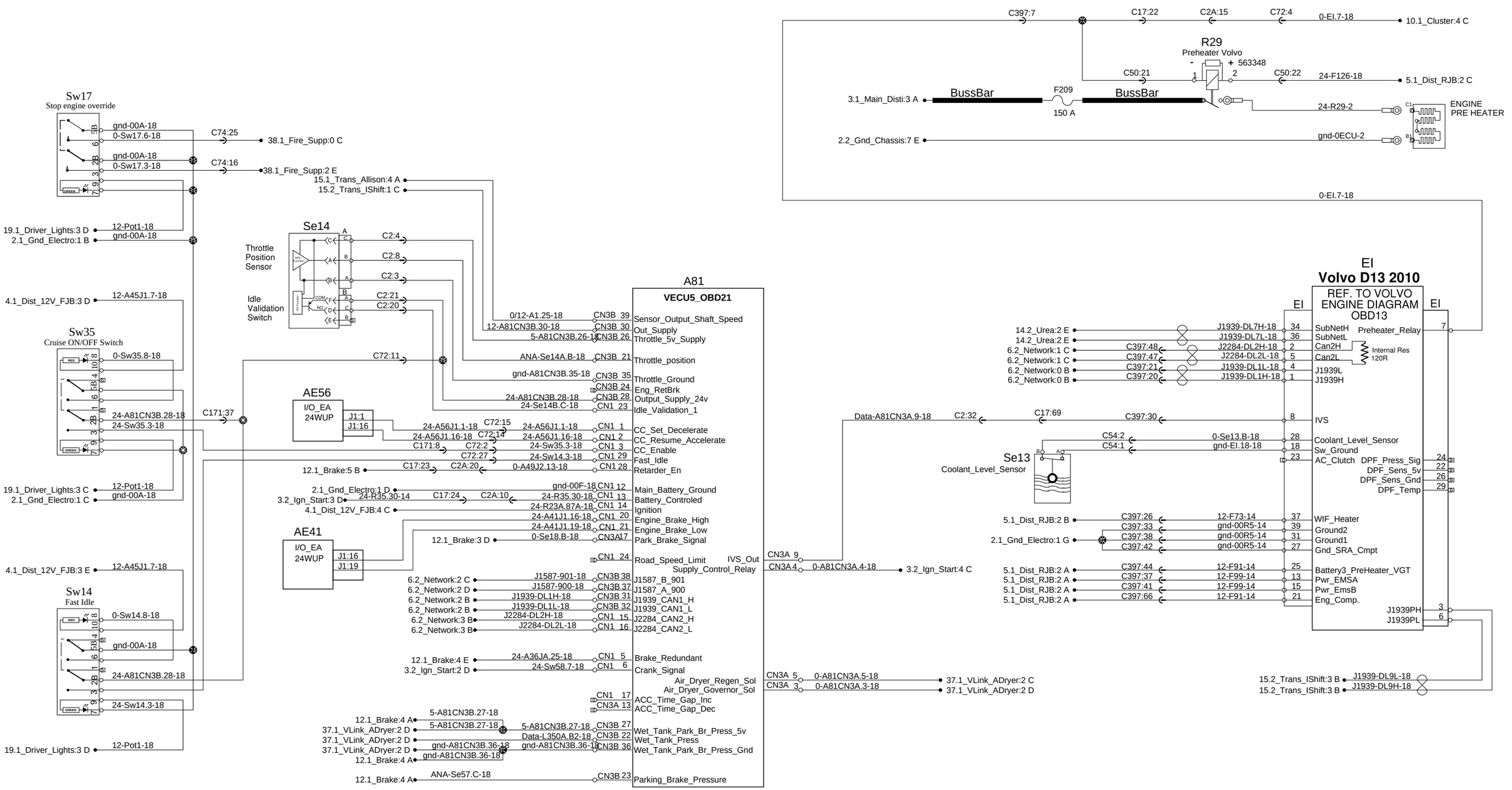

Rev:16

Page:14.1

No:D061640

WIRING DIAGRAM

PREVOST

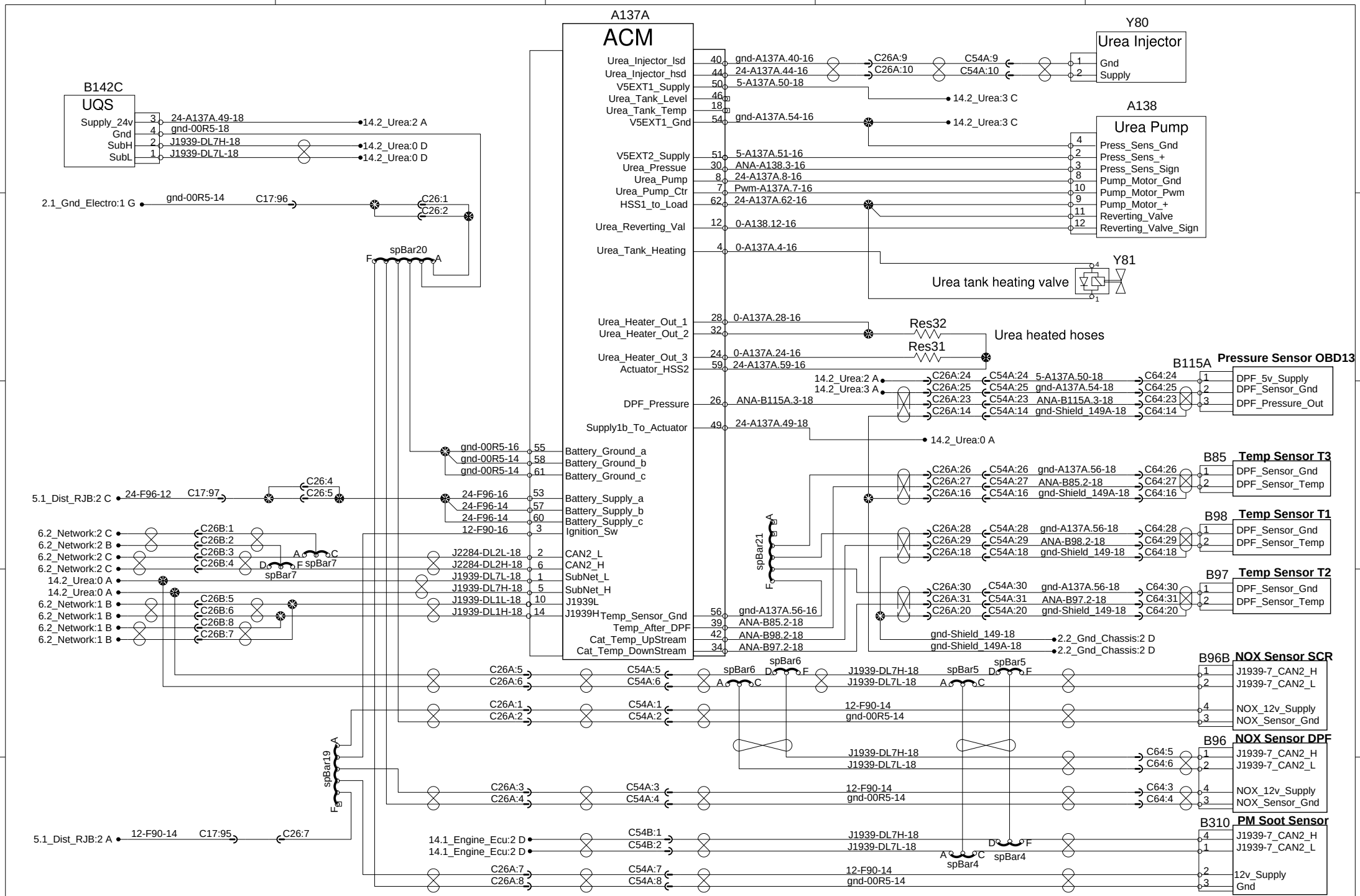

PREVOST®

WIRING DIAGRAM

No:D061640

Page:14.2

Rev:0

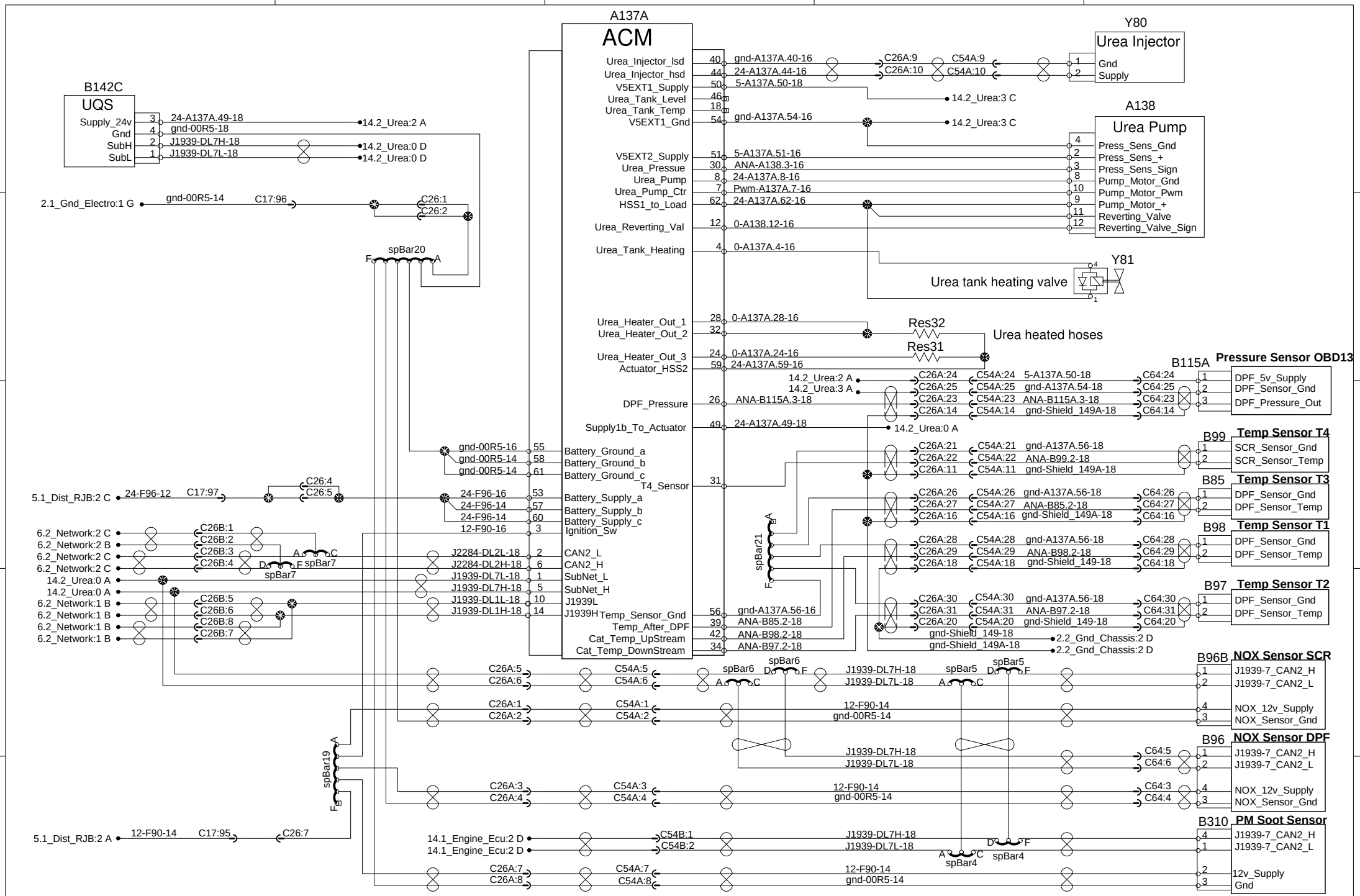

PREVOST®

WIRING DIAGRAM

No:D061640

Page:14.2

Rev:8

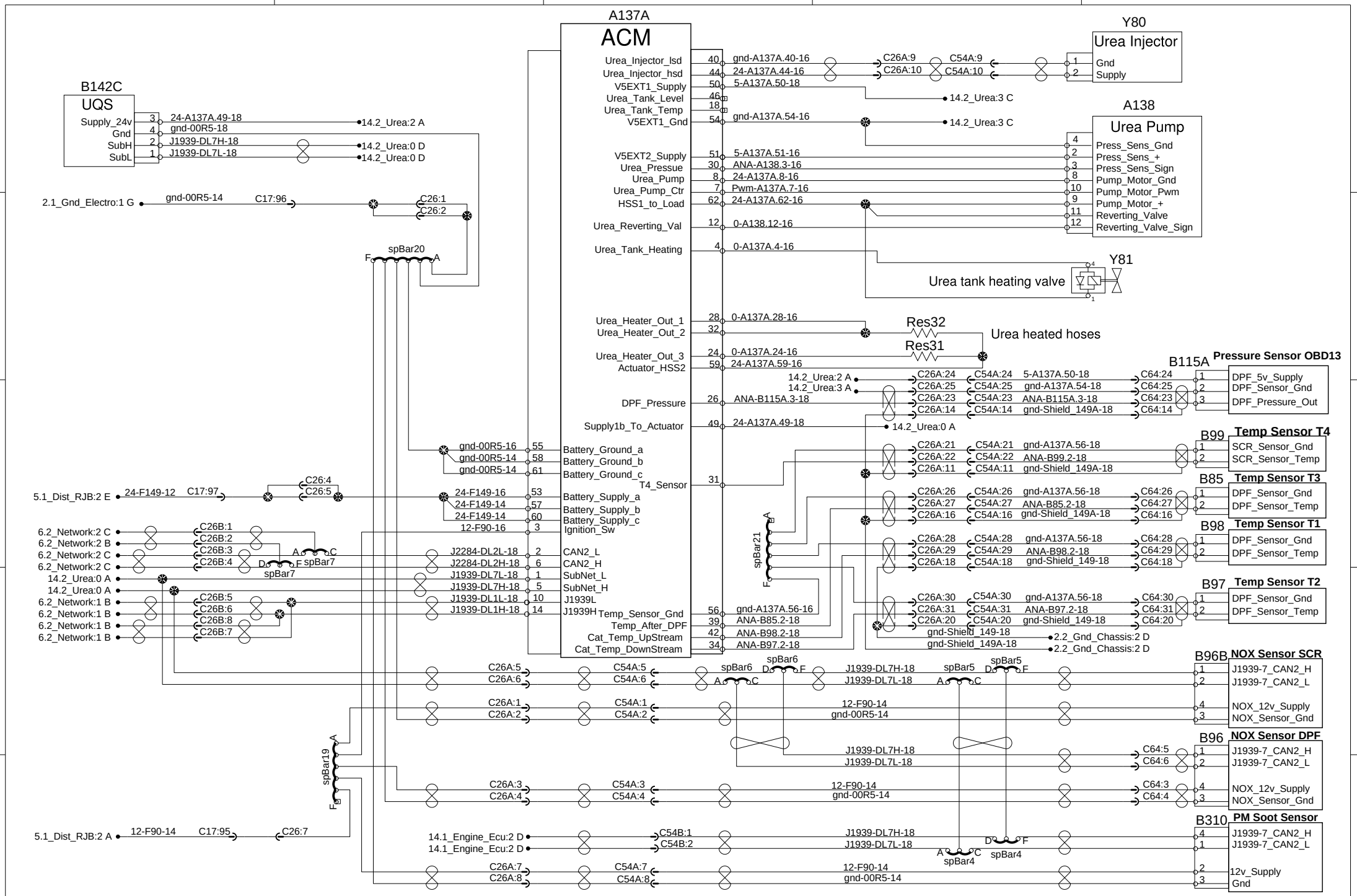

PREVOST®

WIRING DIAGRAM

No:D061640

Page:14.2

Rev:14

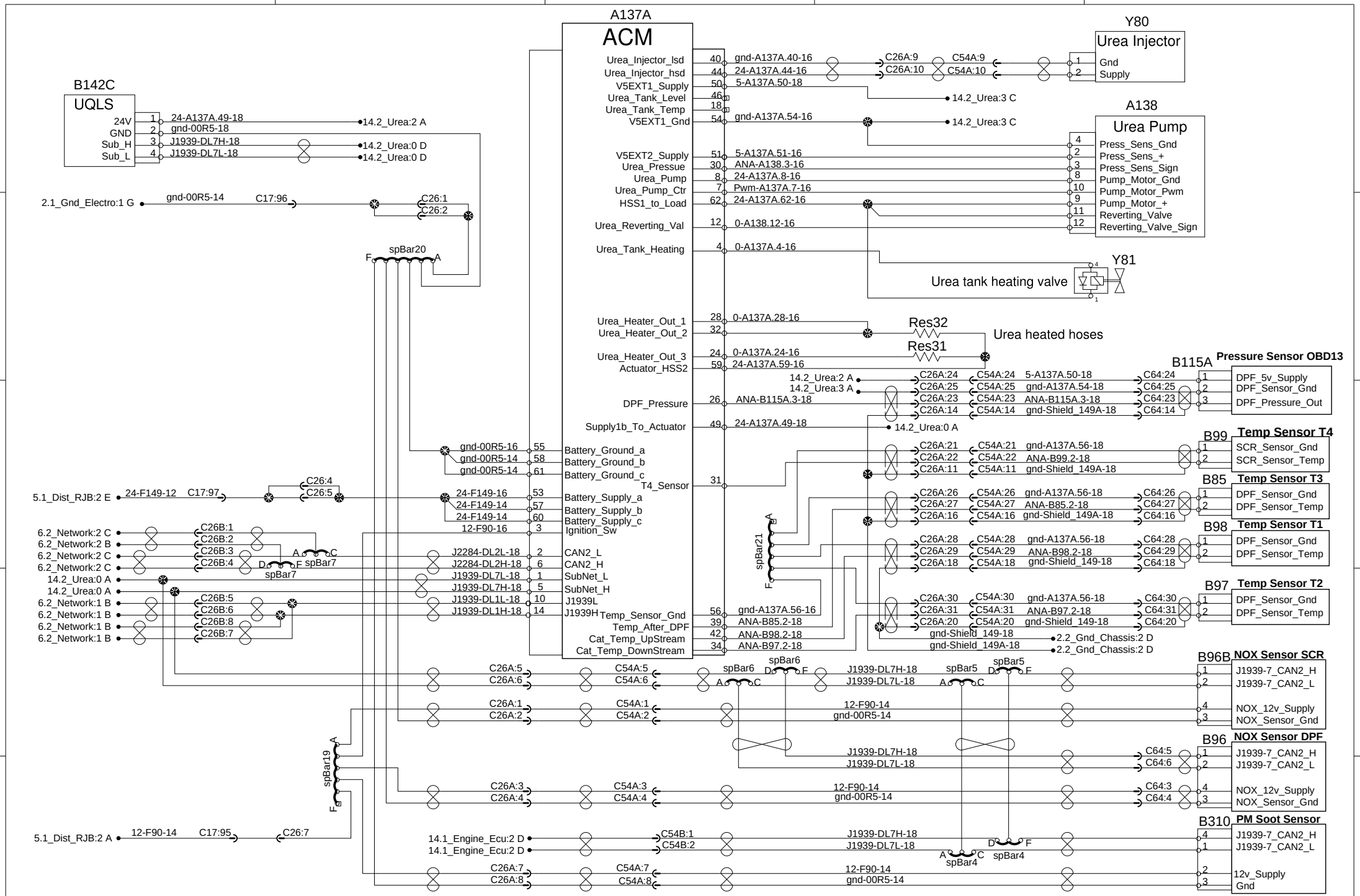

PREVOST®

WIRING DIAGRAM

No:D061640

Page:14.2

Rev:20

Transmission Alisson Gen 5

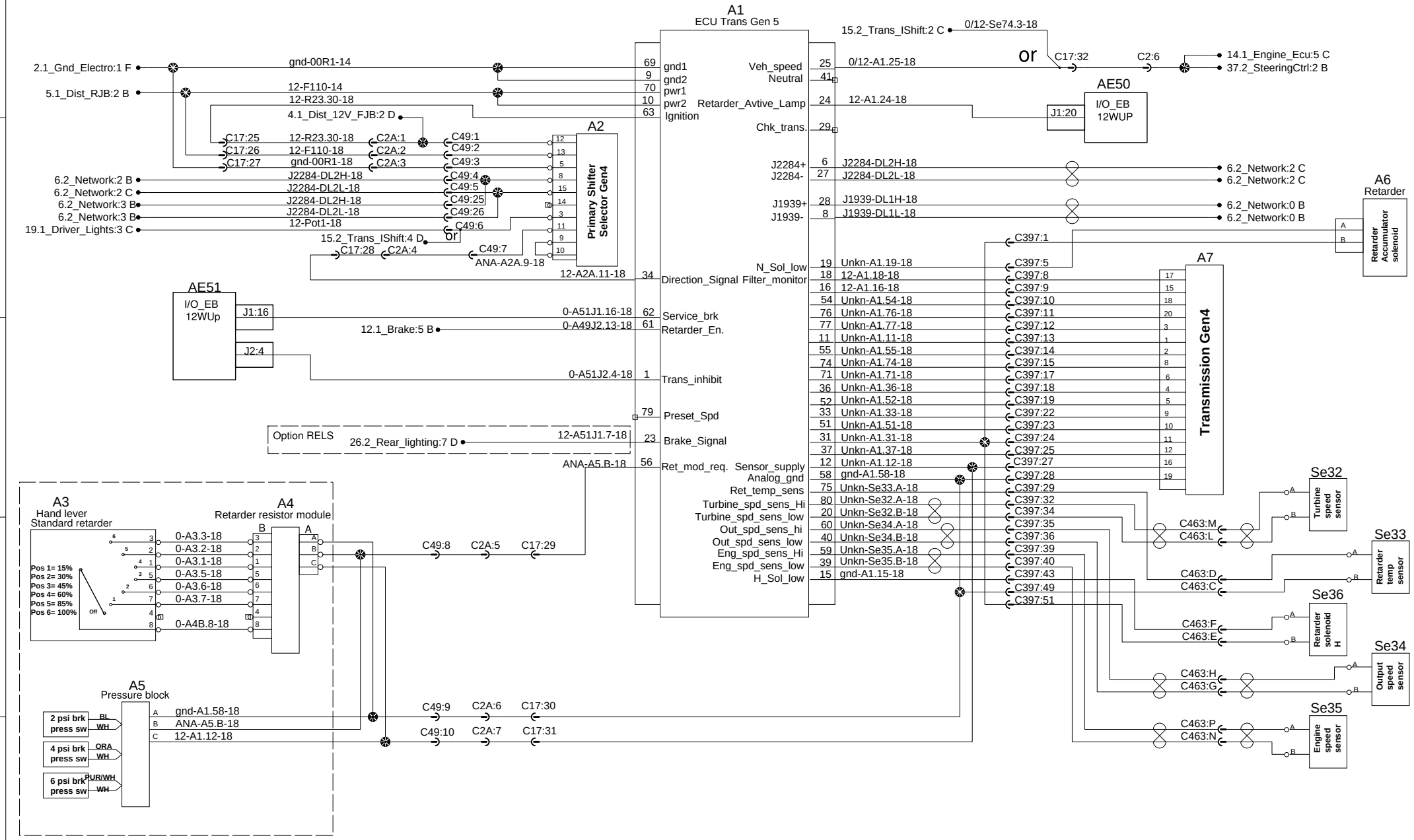

PREVOST®	WIRING DIAGRAM	No:D061640	Page:15.1	Rev:0

Transmission Alisson Gen 5

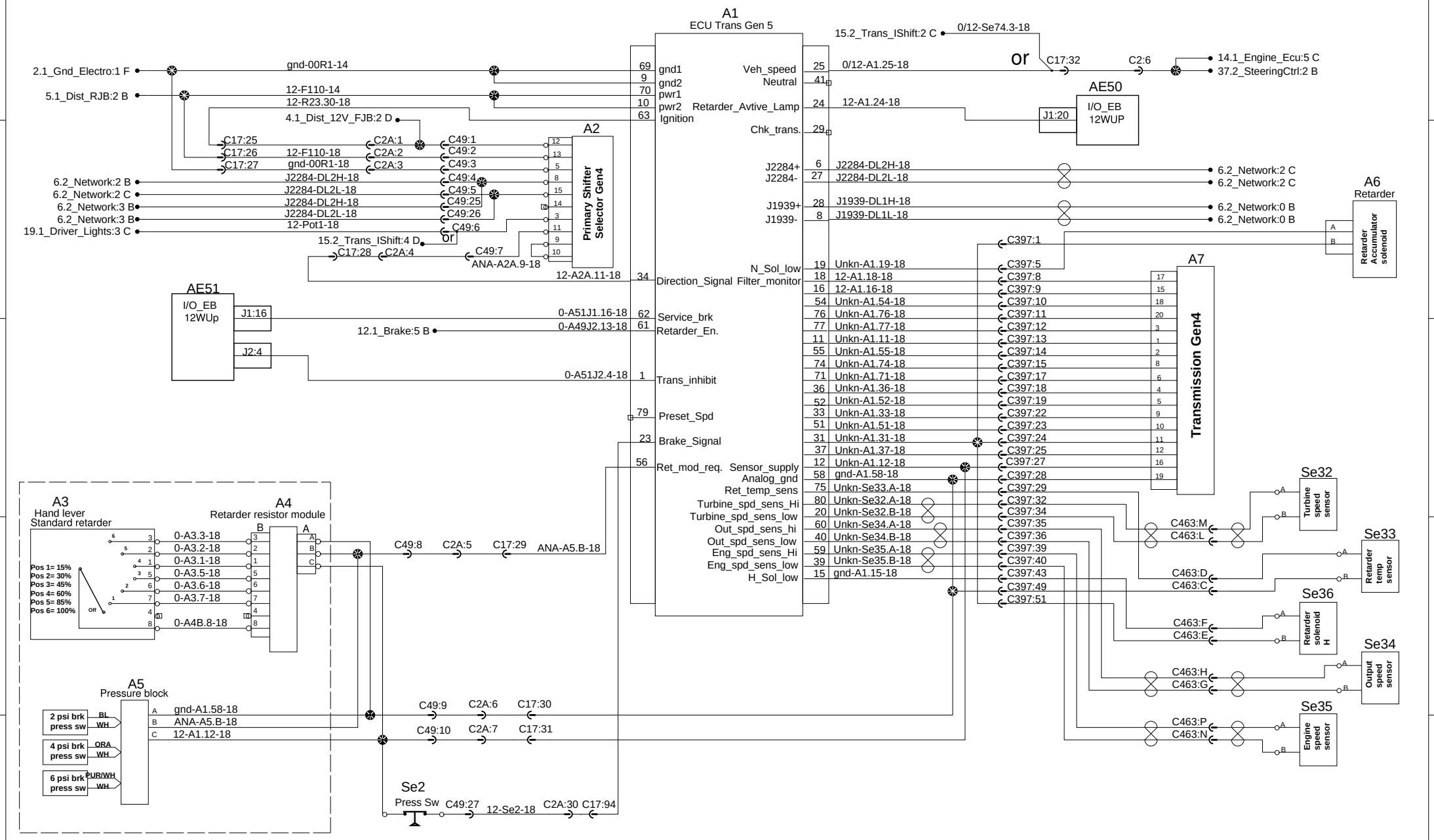

Transmission Alisson Gen 5

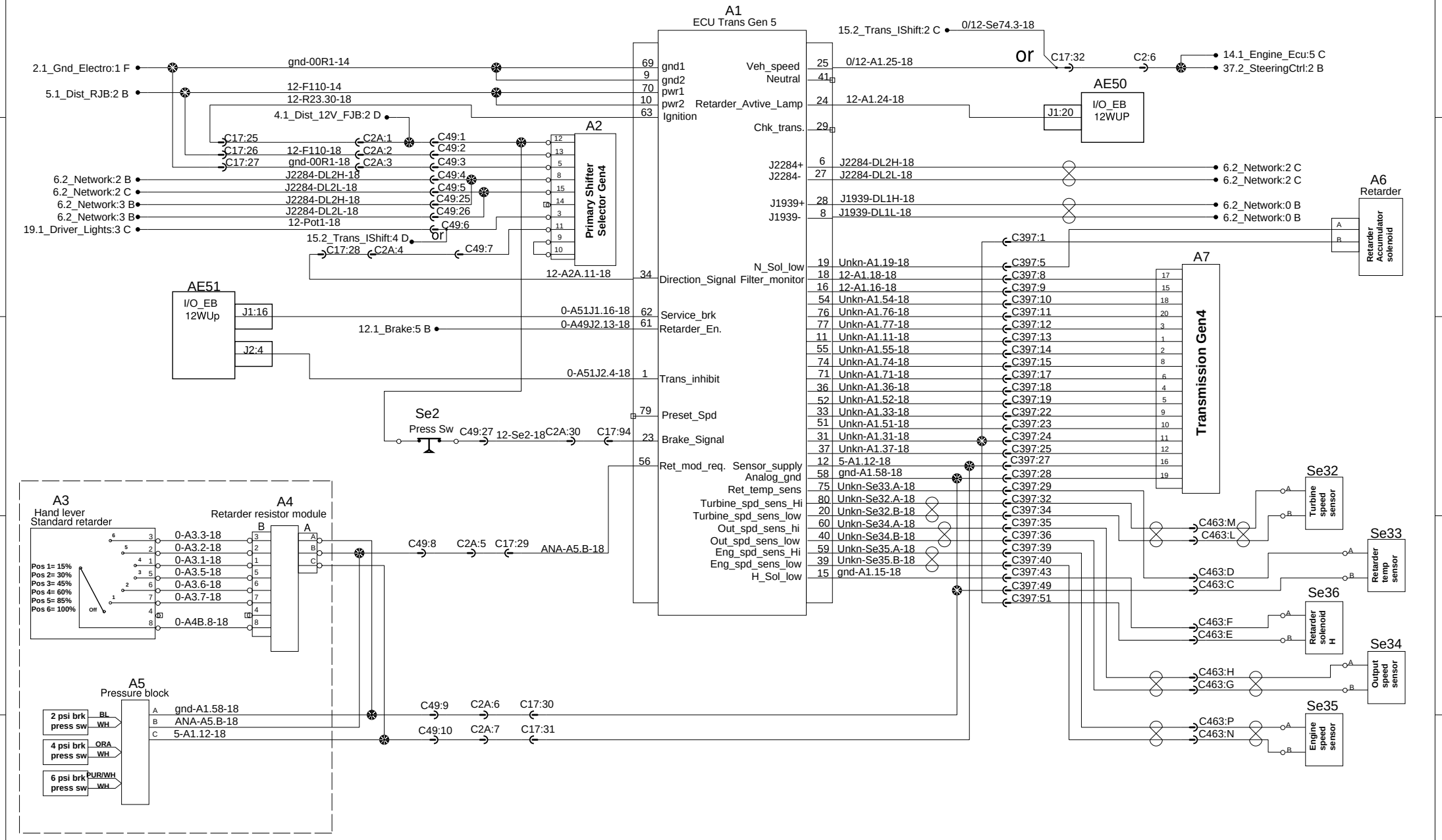

Transmission Alisson Gen 5

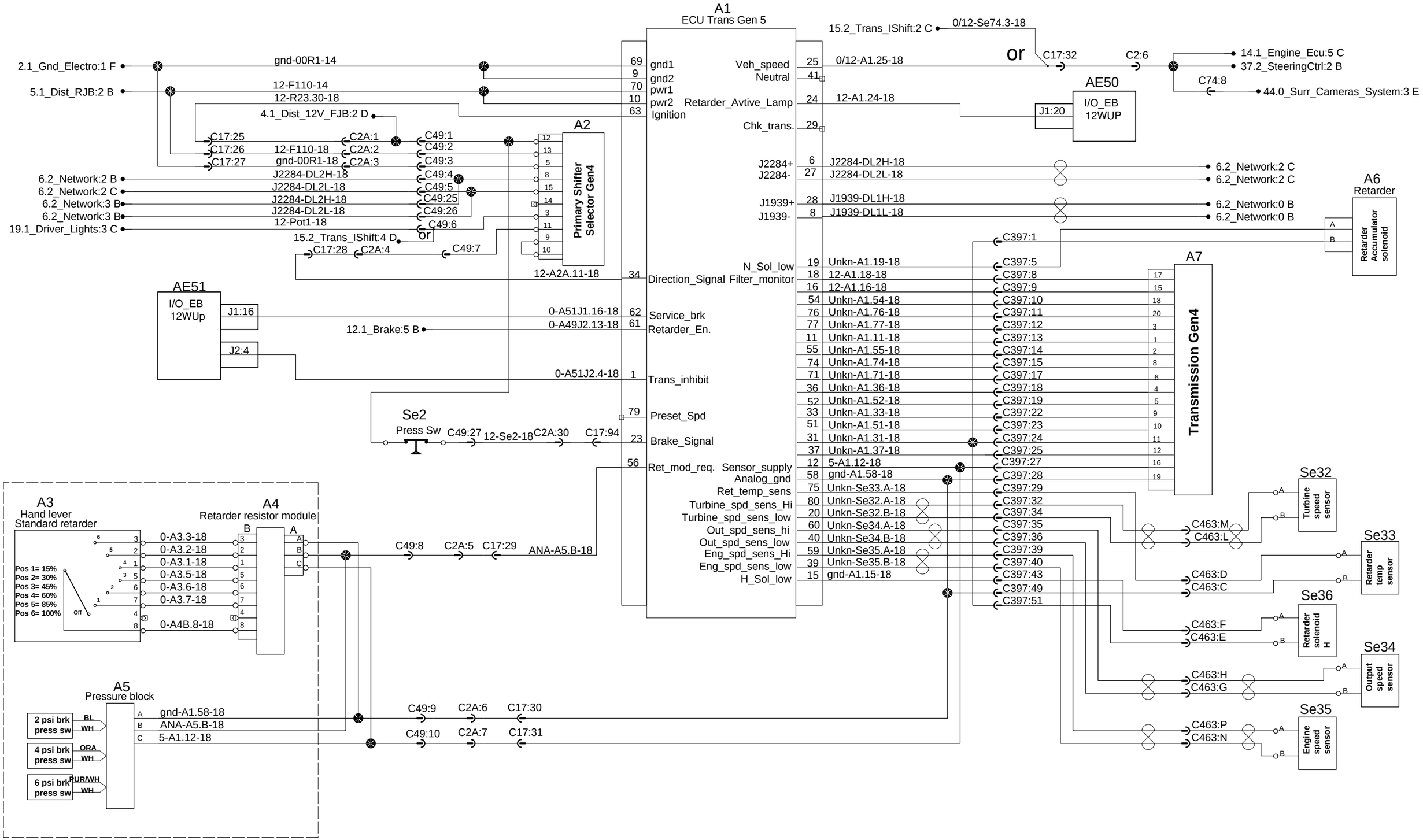

PREVOST®

WIRING DIAGRAM

No:D061640

Page:15.1

Rev:11

Transmission I_Shift

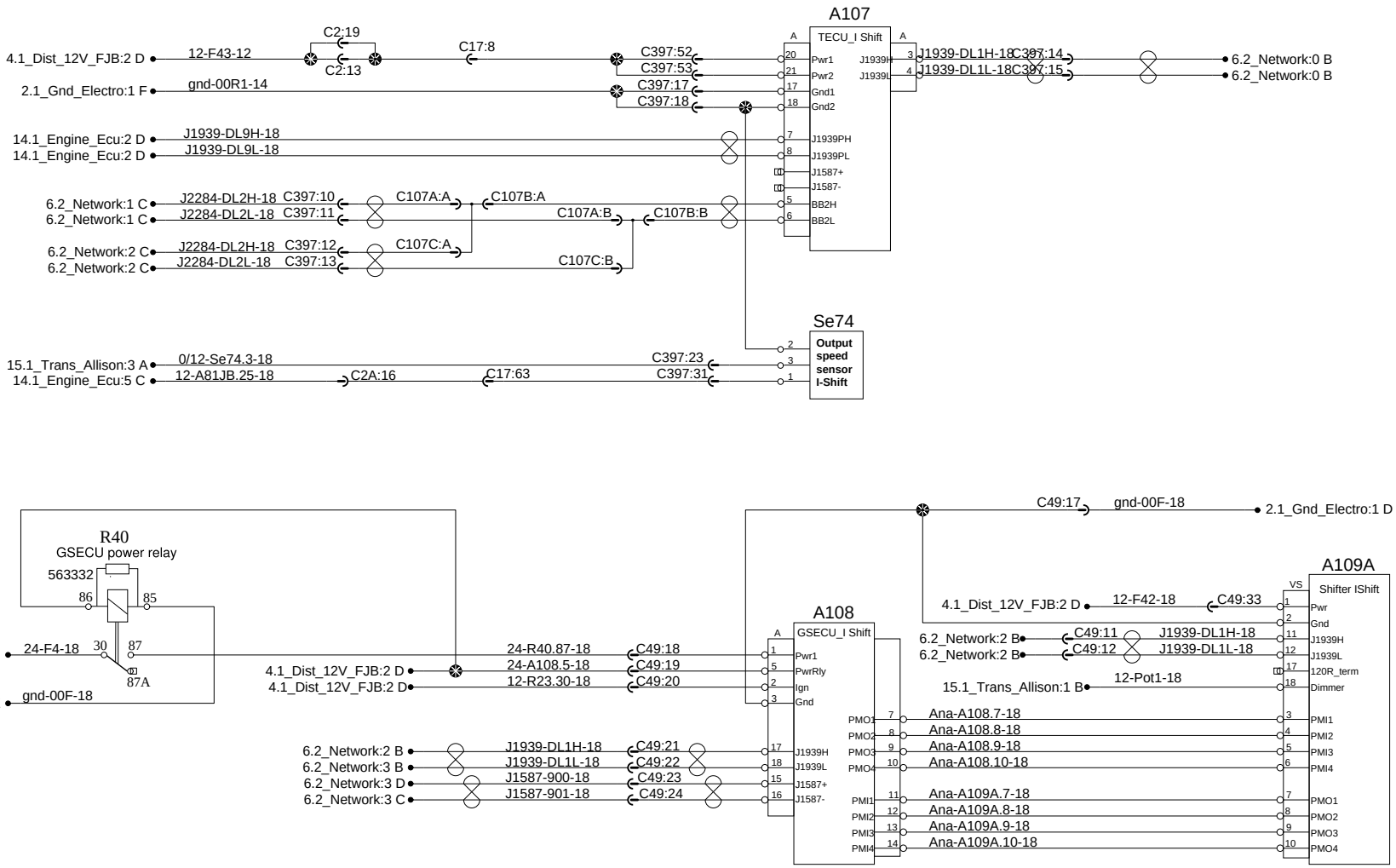

PREVOST®	WIRING DIAGRAM	No:D061640	Page:15.2	Rev:0

Transmission I_Shift

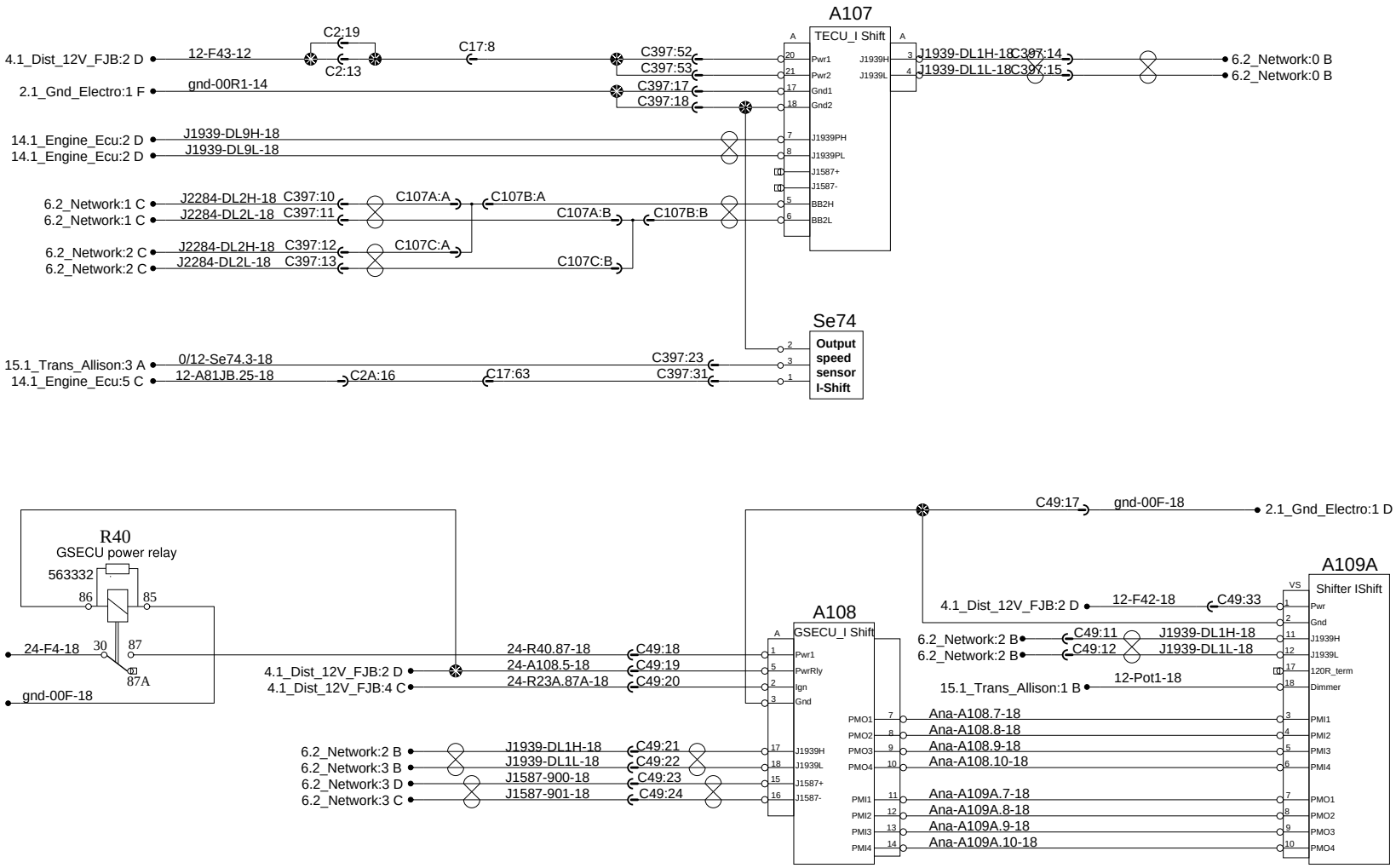

ESP

Electronic Stability Program

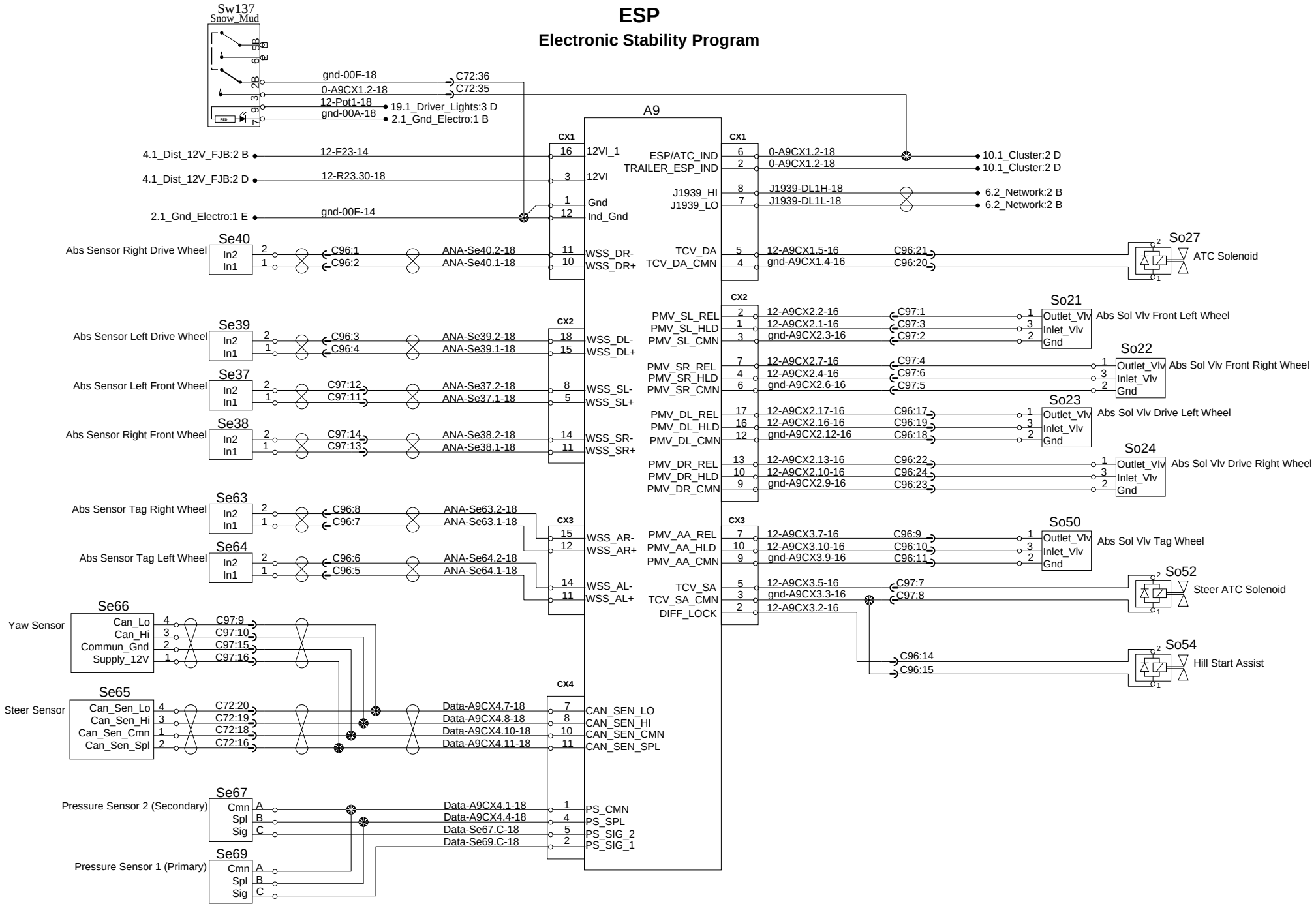

PREVOST®	WIRING DIAGRAM	No:D061640	Page:16.1	Rev:0

Driver assist

(FCM-ACC-LDW)

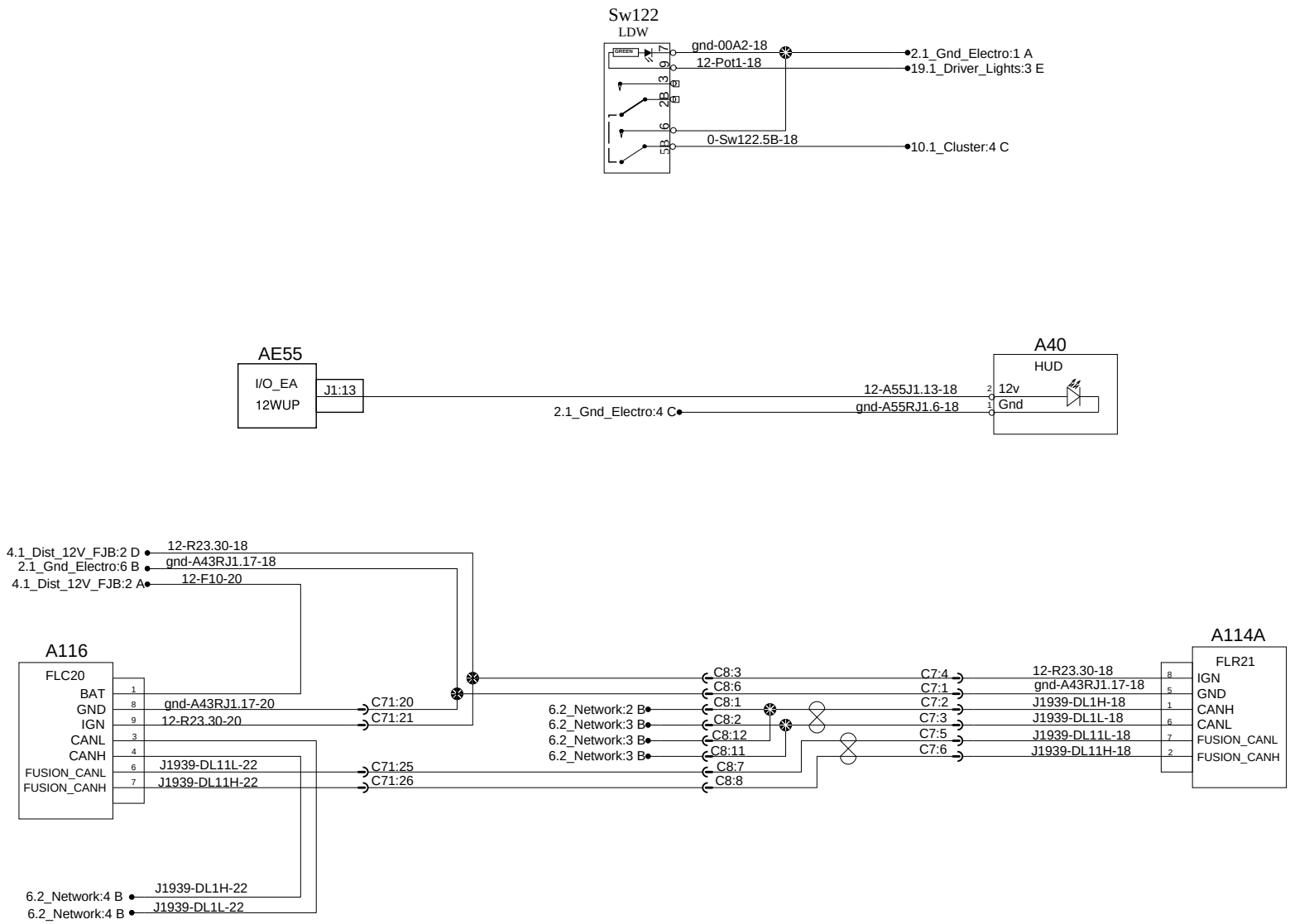

Water PreHeater (Spheros or Pro-Heat)

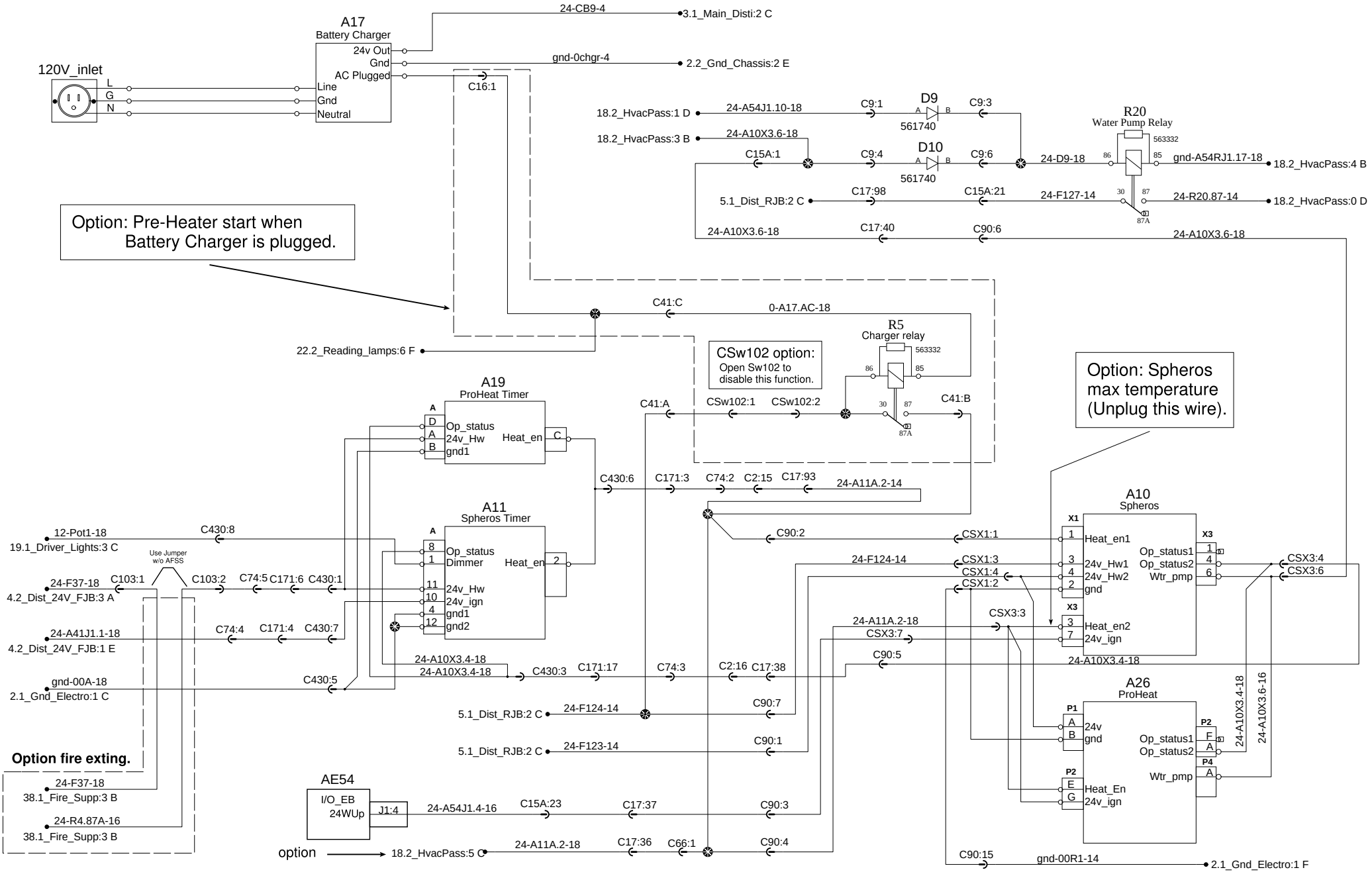

PREVOST®	WIRING DIAGRAM	No:D061640	Page:17.1	Rev:0

Water PreHeater (Spheros or Pro-Heat)

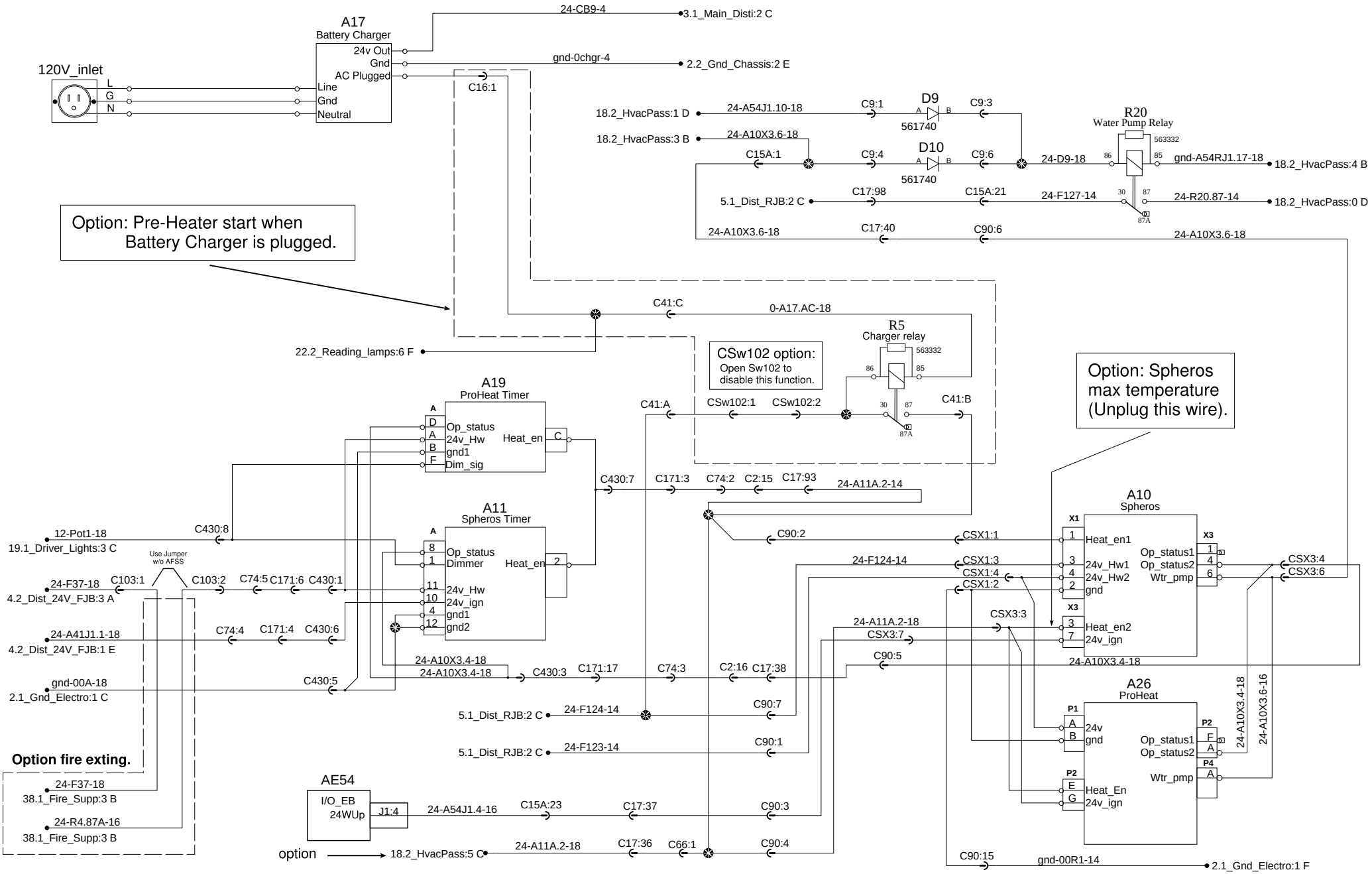

PREVOST®

WIRING DIAGRAM

No:D061640

Page:17.1

Rev:1

Water PreHeater (Spheros or Pro-Heat)

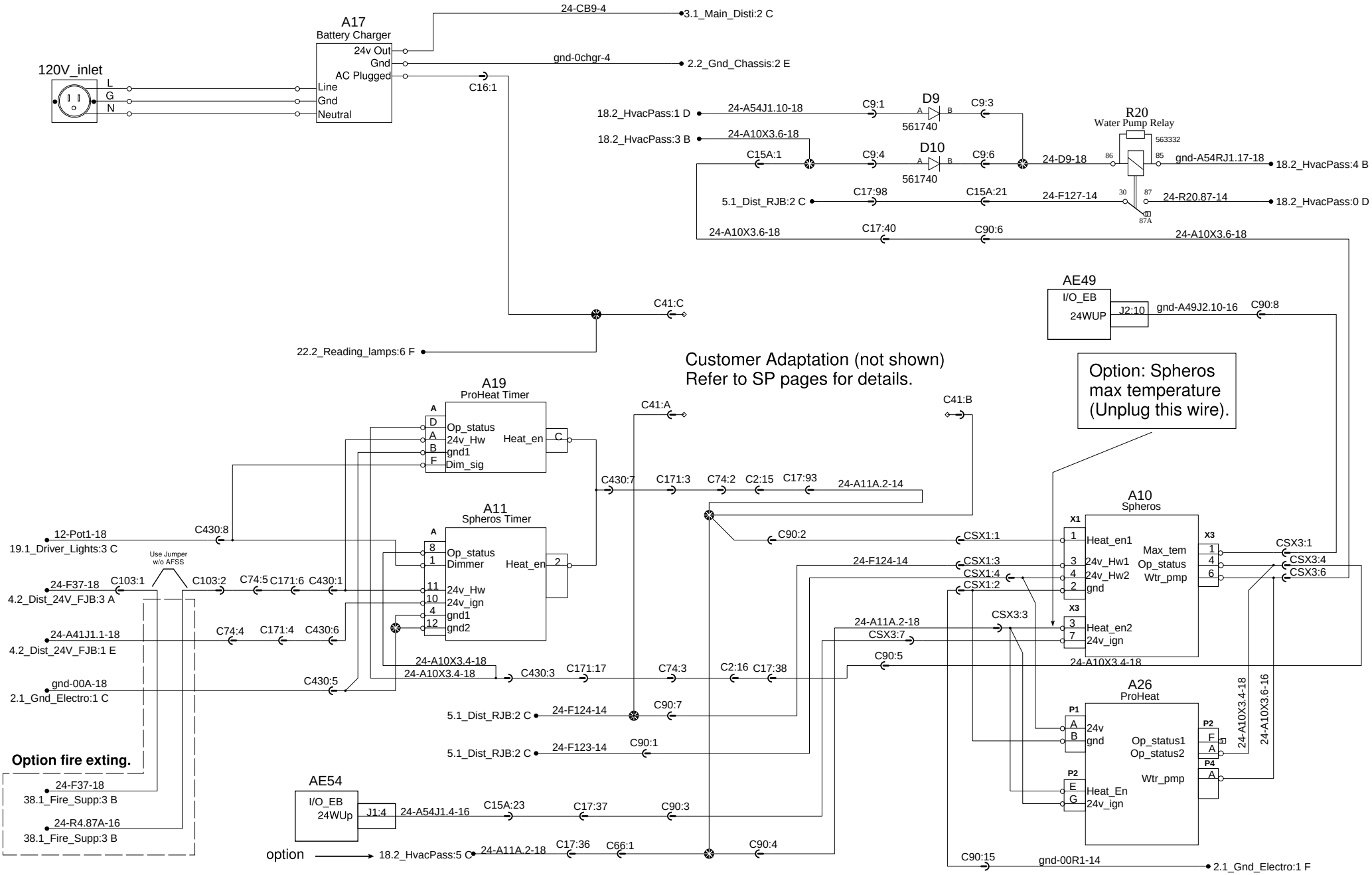

PREVOST®	WIRING DIAGRAM	No:D061640	Page:17.1	Rev:06

Water PreHeater (Spheros or Pro-Heat)

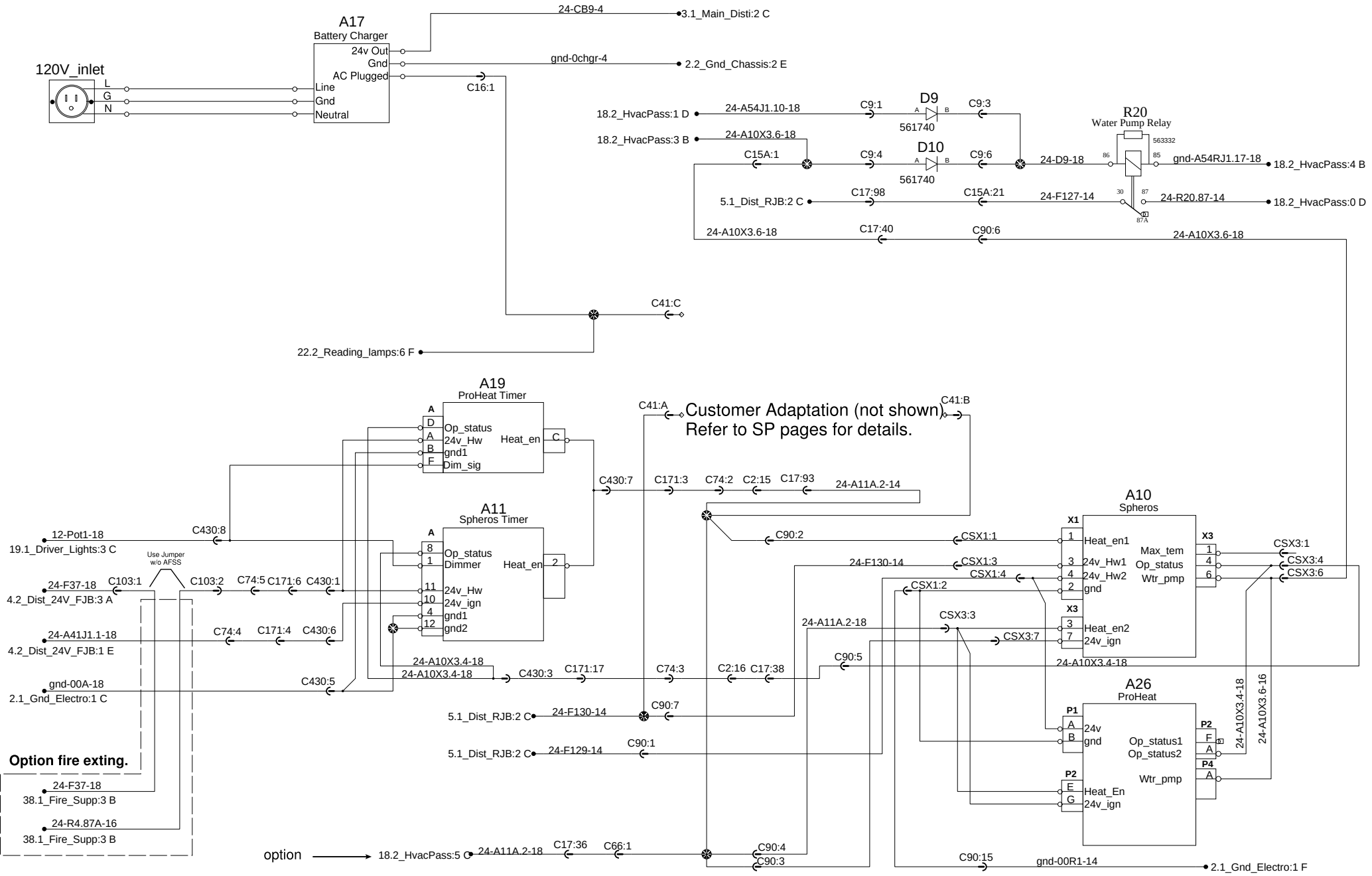

PREVOST®	WIRING DIAGRAM	No:D061640	Page:17.1	Rev:8

Water PreHeater (Spheros or Pro-Heat)

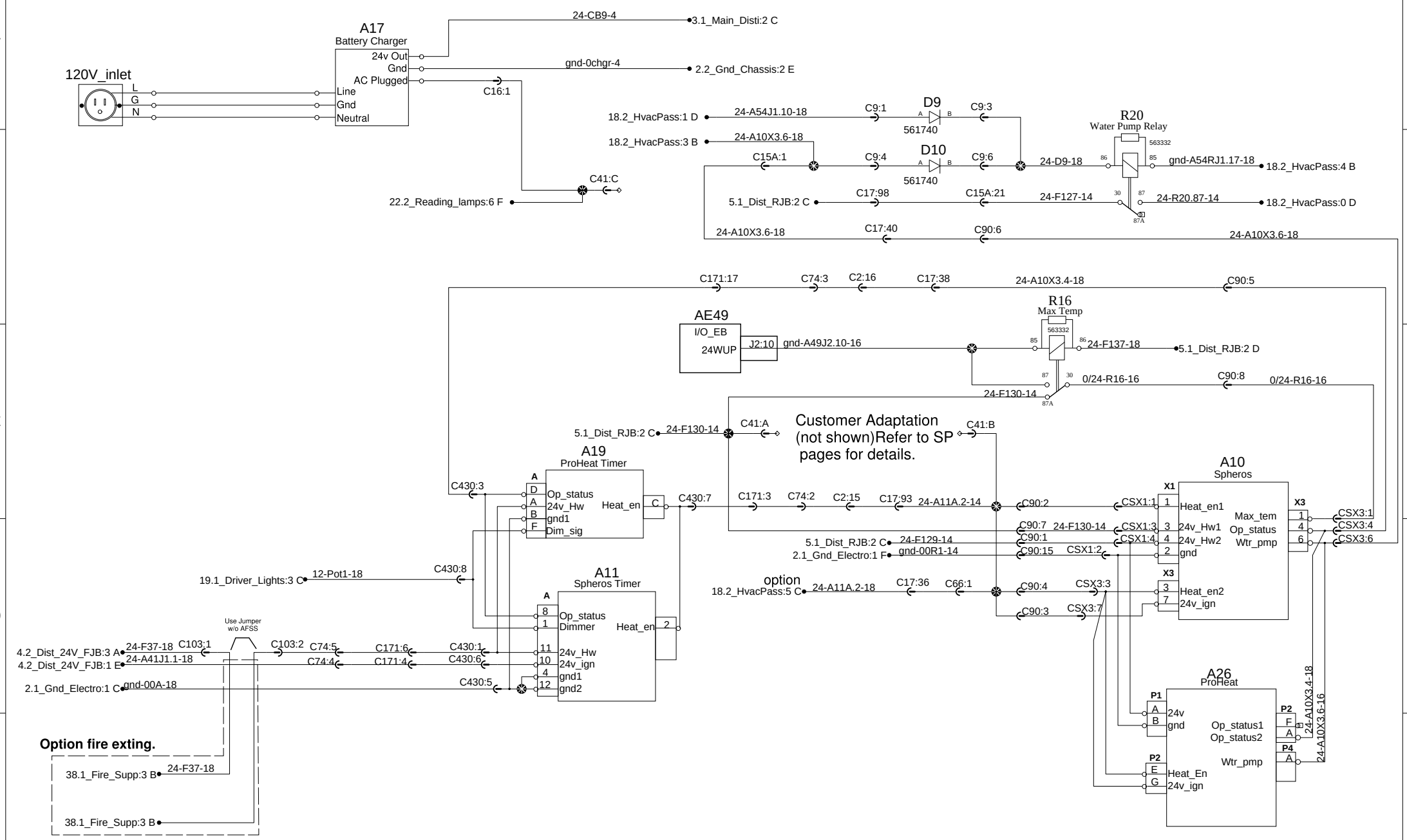

PREVOST®	WIRING DIAGRAM	No:D061640	Page:17.1	Rev:10

Water PreHeater

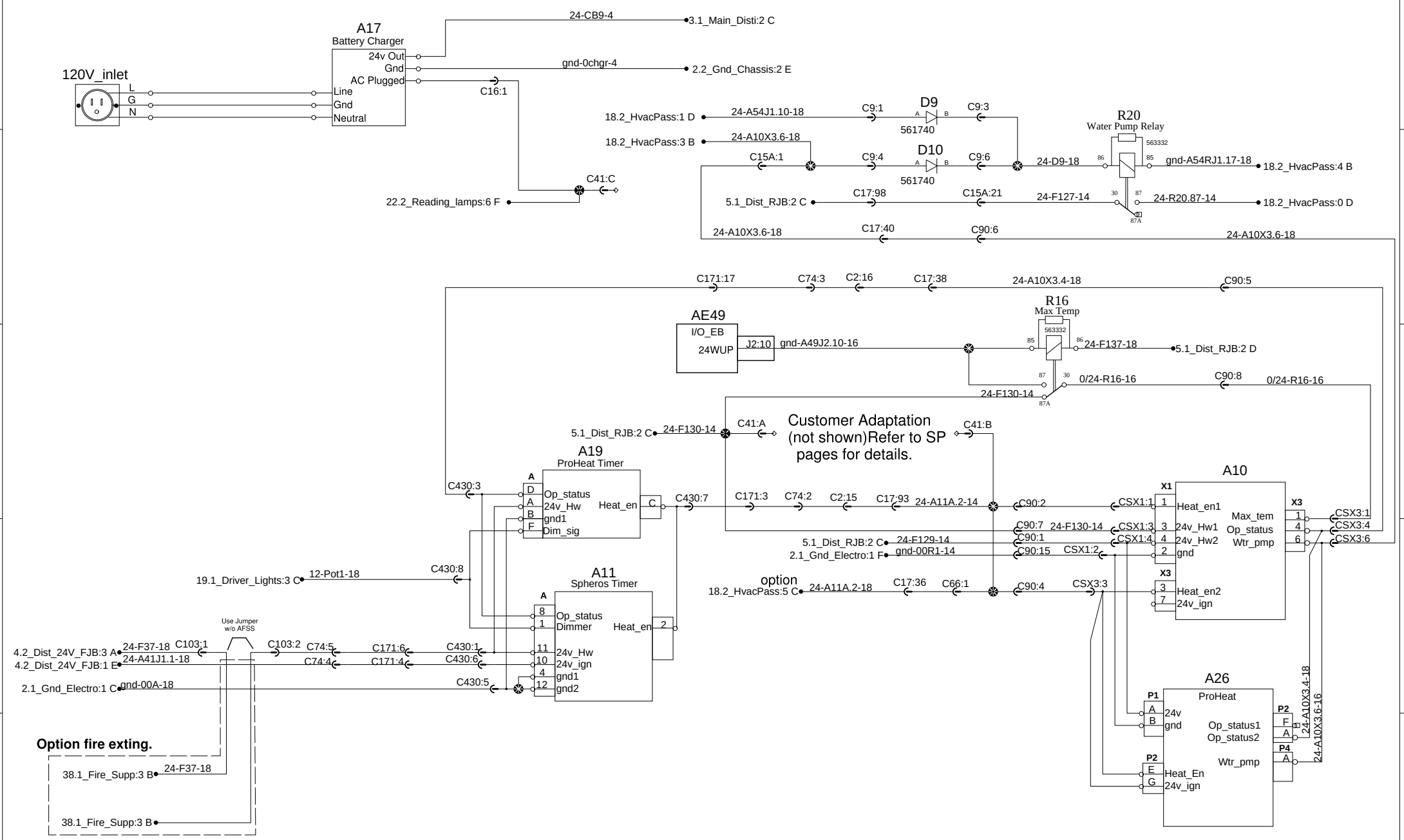

PREVOST®	WIRING DIAGRAM	No:D061640	Page:17.1	Rev:16

Water PreHeater System Forced
Customer Adaptation Offshore Heating Function

REFER TO P18.2 (STD) FOR ALL DETAILS

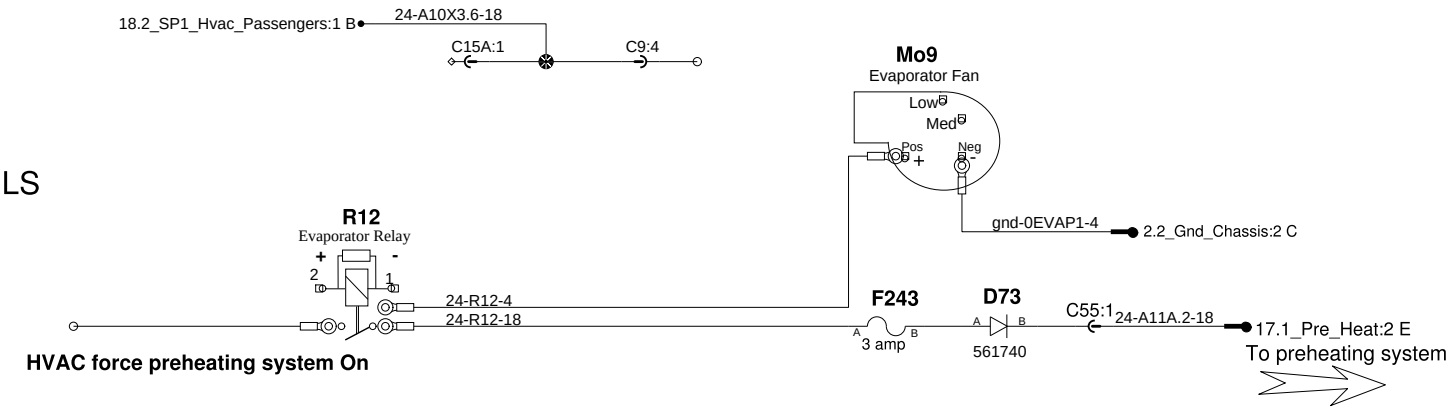

REFER TO P17.1 (STD) FOR ALL DETAILS

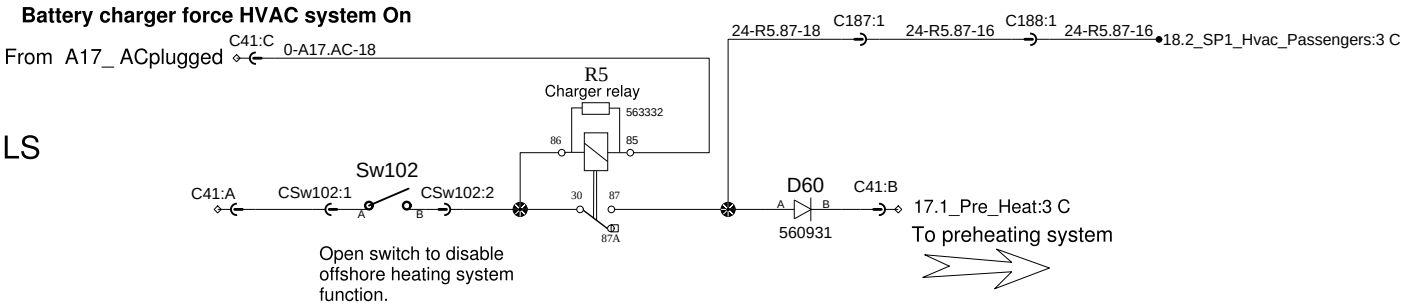

PREVOST®	WIRING DIAGRAM	No:D061640	Page:17.1 SP1	Rev:03

Hvac defroster

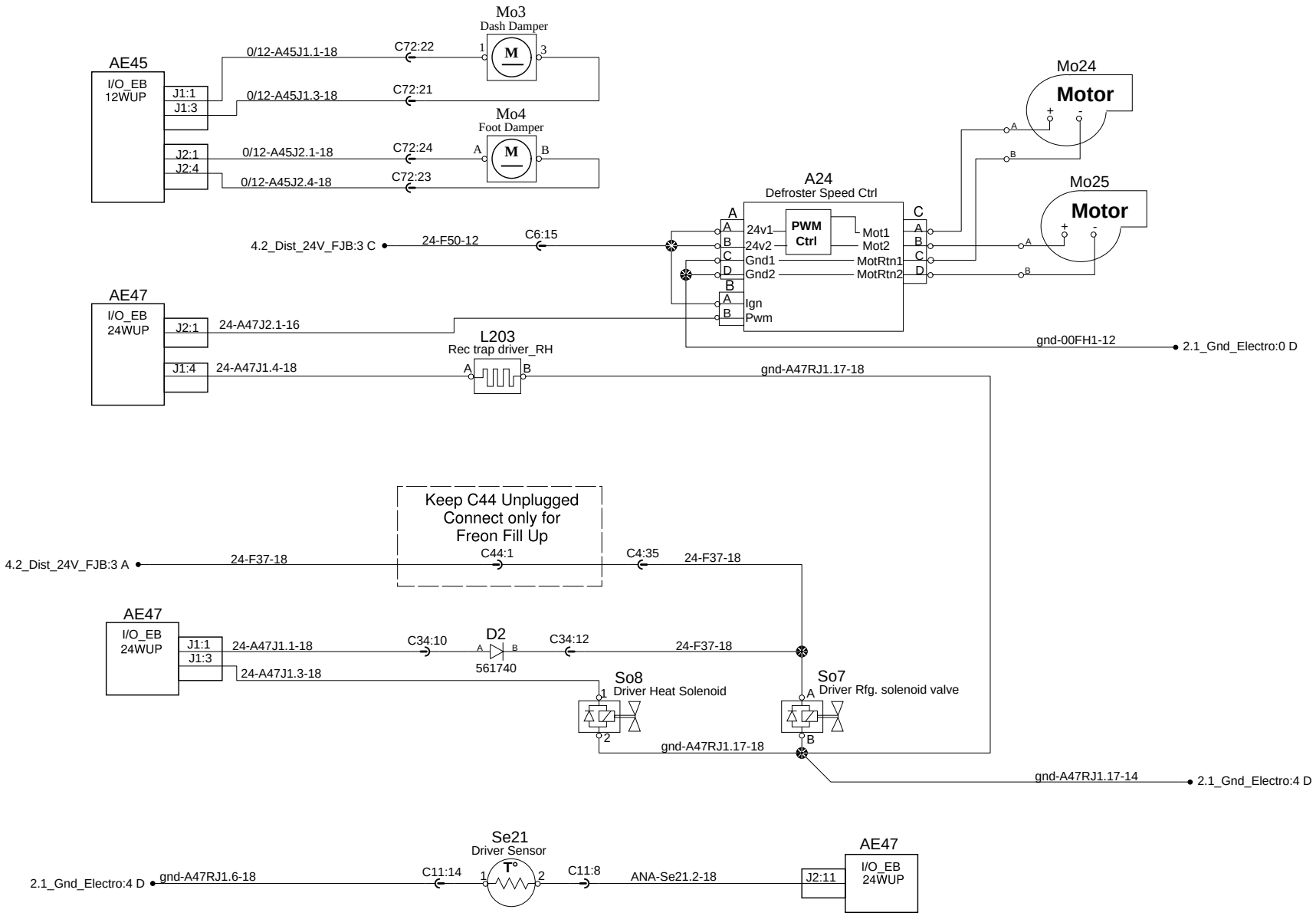

PREVOST®	WIRING DIAGRAM	No:D061640	Page:18.1	Rev:0

Hvac defroster

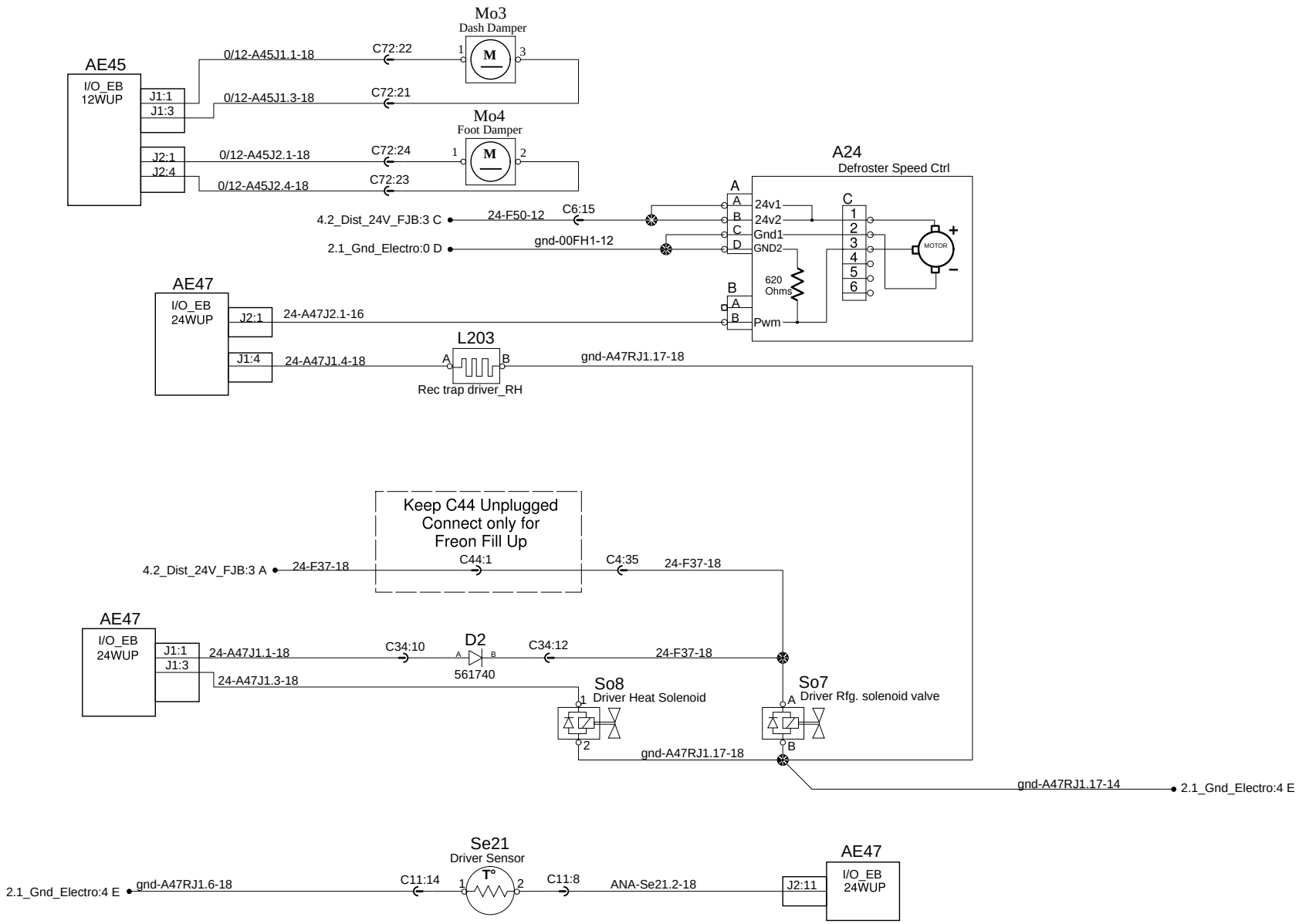

PREVOST®	WIRING DIAGRAM	No:D061640	Page:18.1	Rev:4-1

Hvac defroster

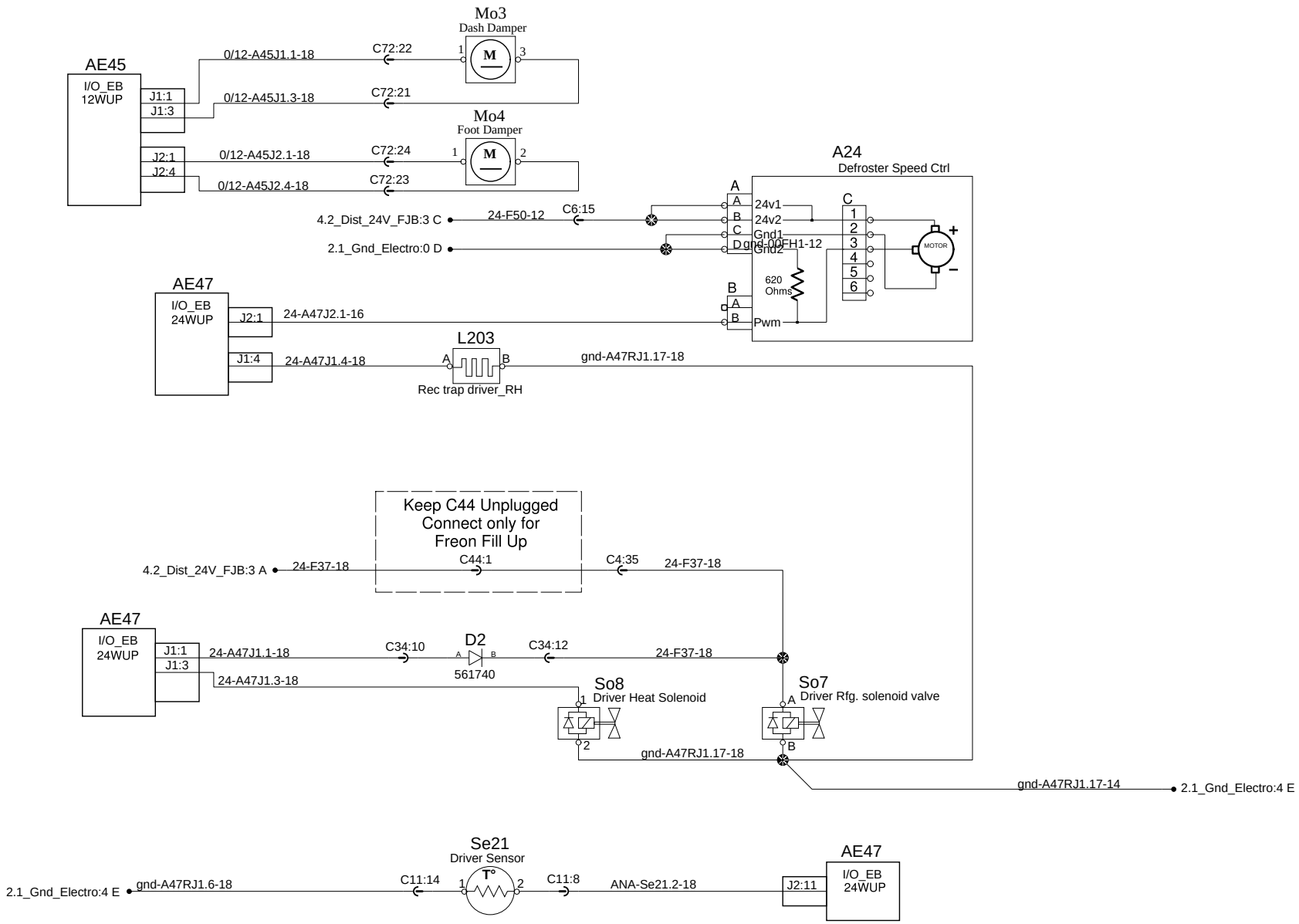

PREVOST®	WIRING DIAGRAM	No:D061640	Page:18.1	Rev:13

Hvac passengers

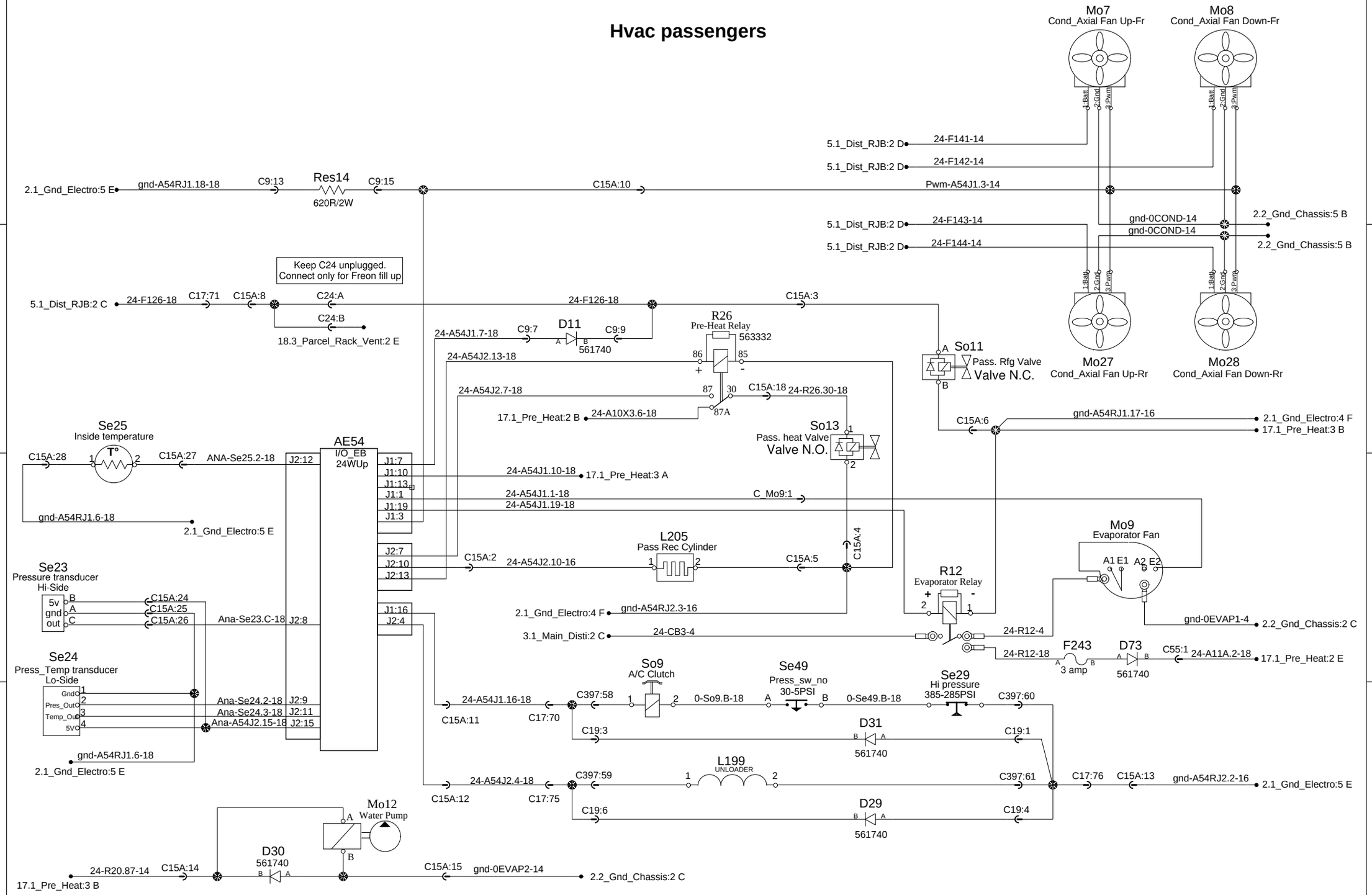

PREVOST®

WIRING DIAGRAM

No:D061640

Page:18.2

Rev:0

Hvac passengers

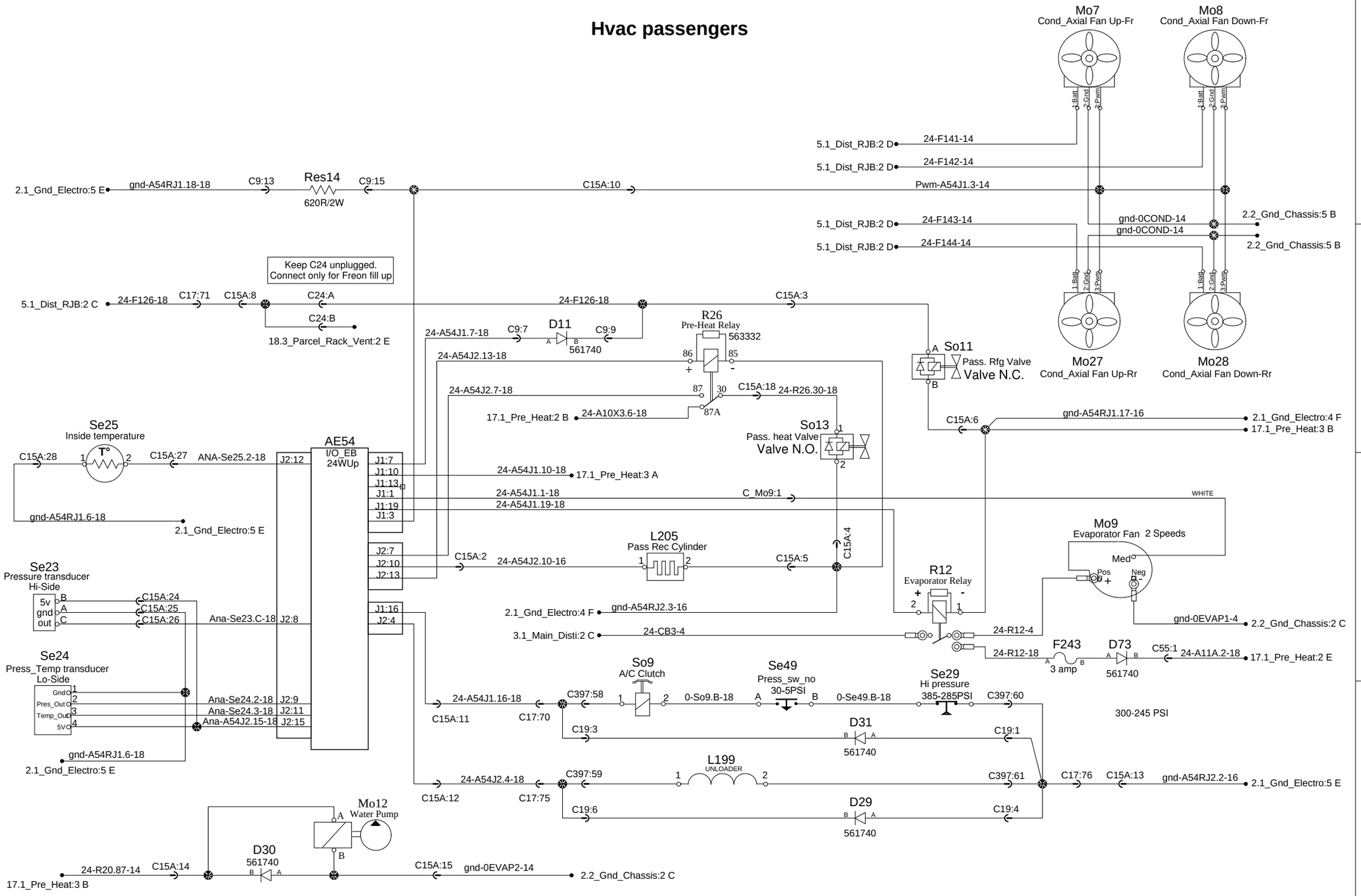

PREVOST®	WIRING DIAGRAM	No:D061640	Page:18.2	Rev:06

Hvac passengers

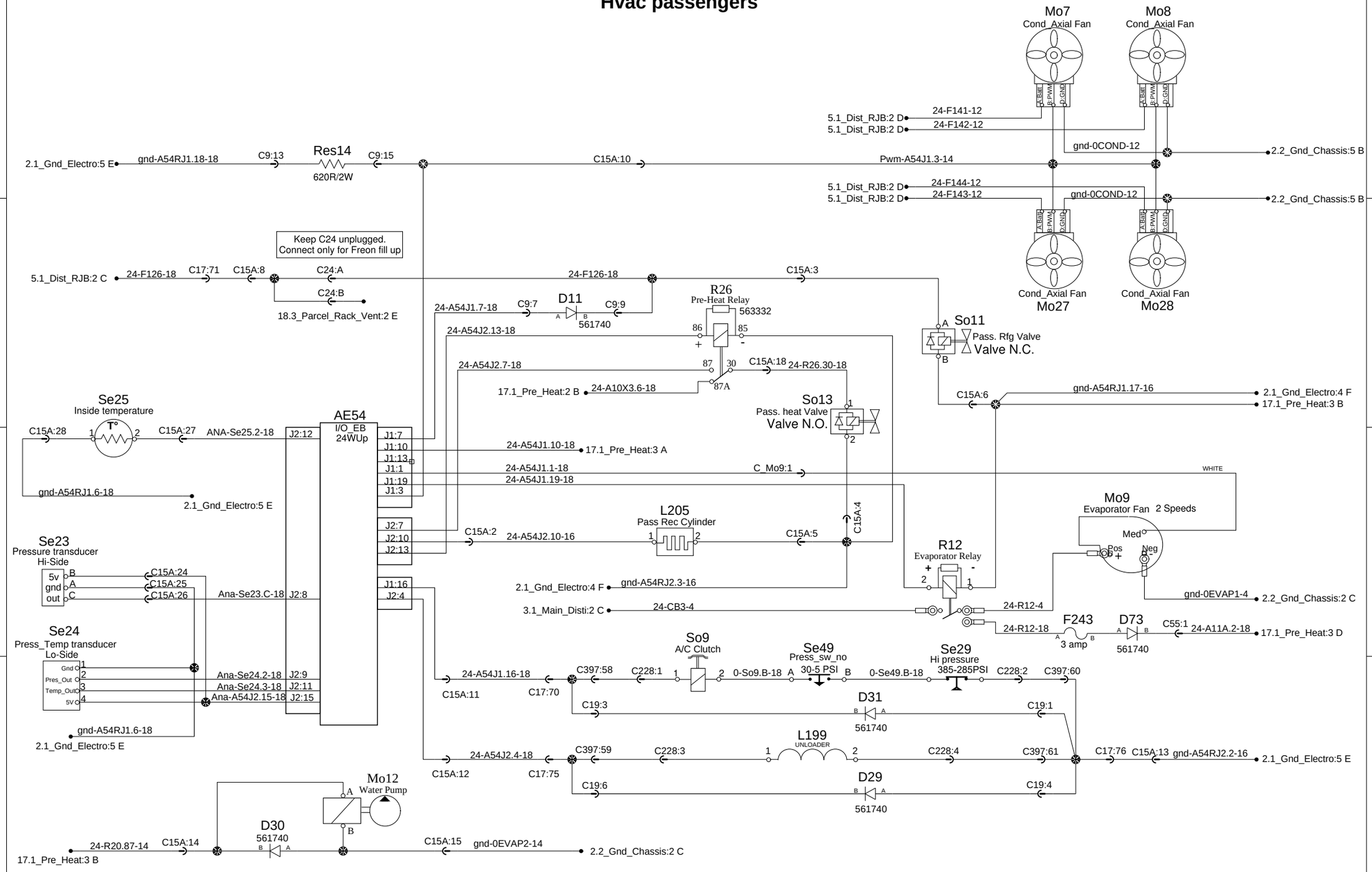

PREVOST®	WIRING DIAGRAM	No:D061640	Page:18.2	Rev:20

Hvac passengers
Customer Adaptation Offshore Heating Sys.
3 Speed Motor

REFER TO P18.2(STD) FOR ALL DETAILS

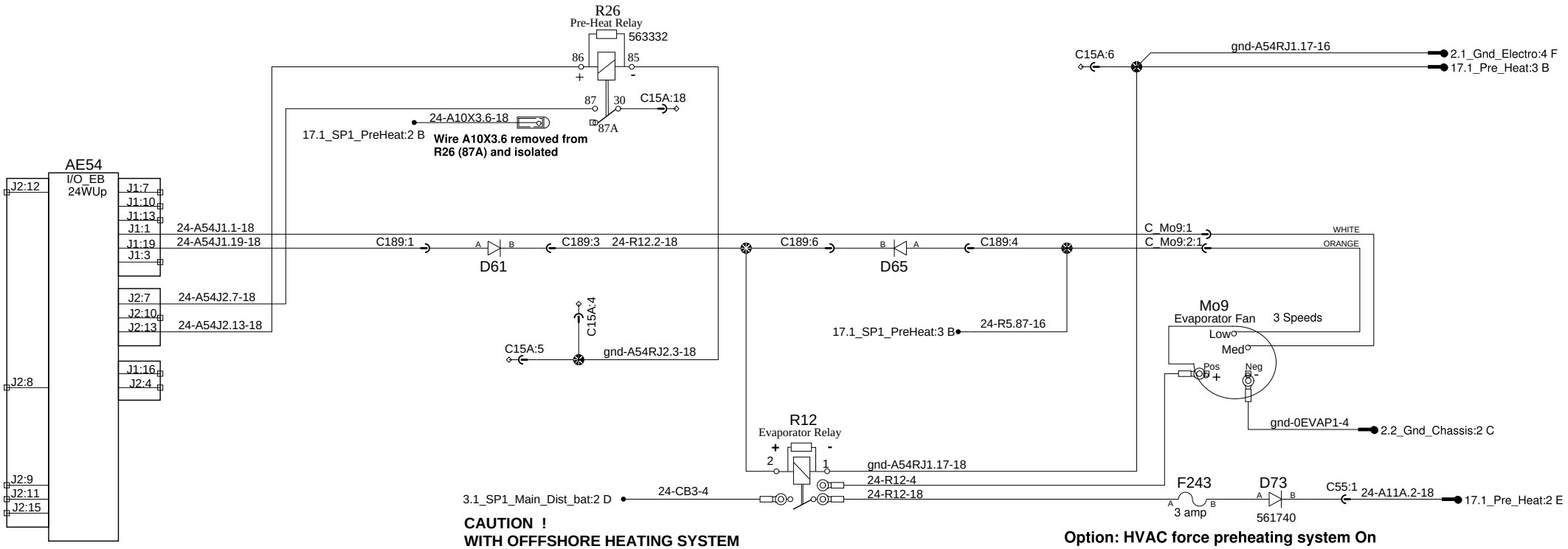

PREVOST®	WIRING DIAGRAM	No:D061640	Page:18.2 SP1	Rev:04

Customer Adaptation AIR PURIFIER HVAC

REFER TO P18.2(STD) FOR ALL DETAILS

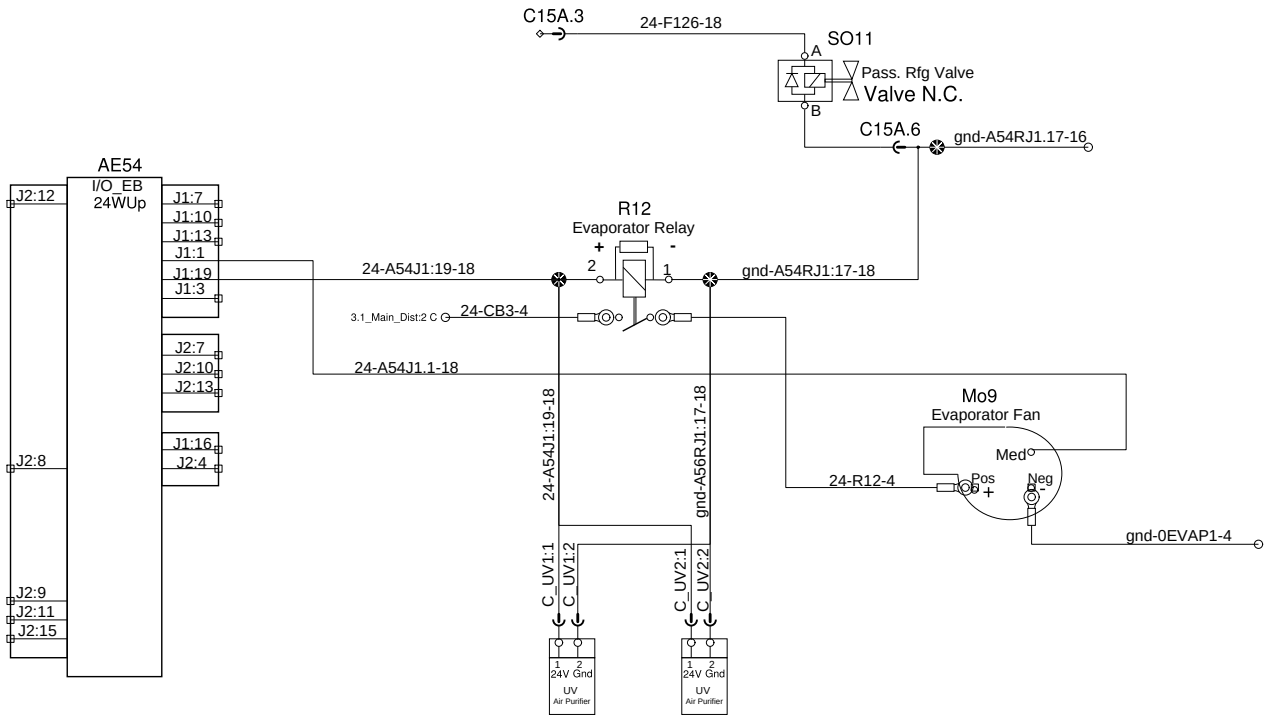

PREVOST®	WIRING DIAGRAM	No:D061640	Page:18.2 SP3	Rev:00

Parcel rack A/C system

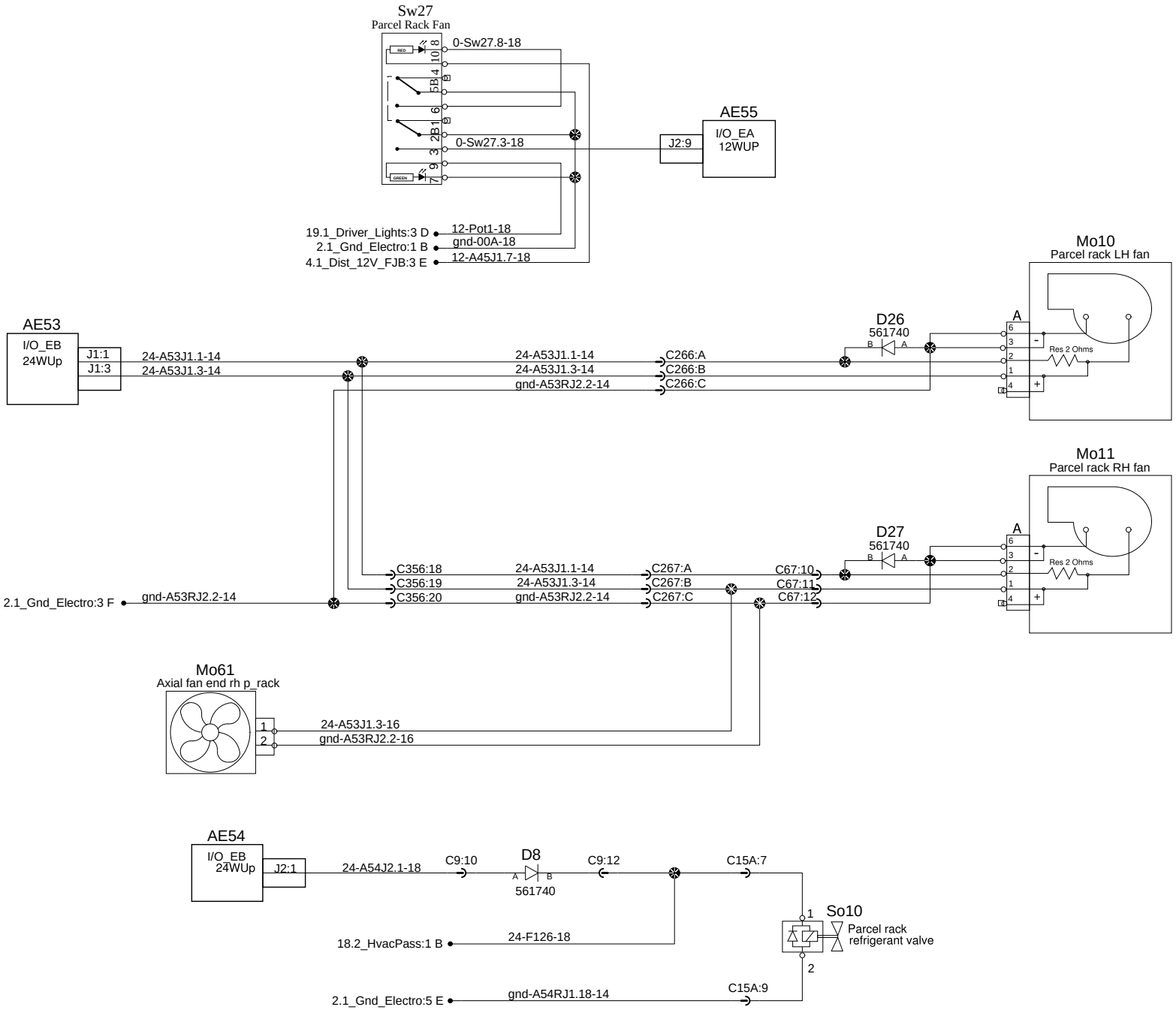

PREVOST®	WIRING DIAGRAM	No:D061640	Page:18.3	Rev:0

Parcel rack A/C system

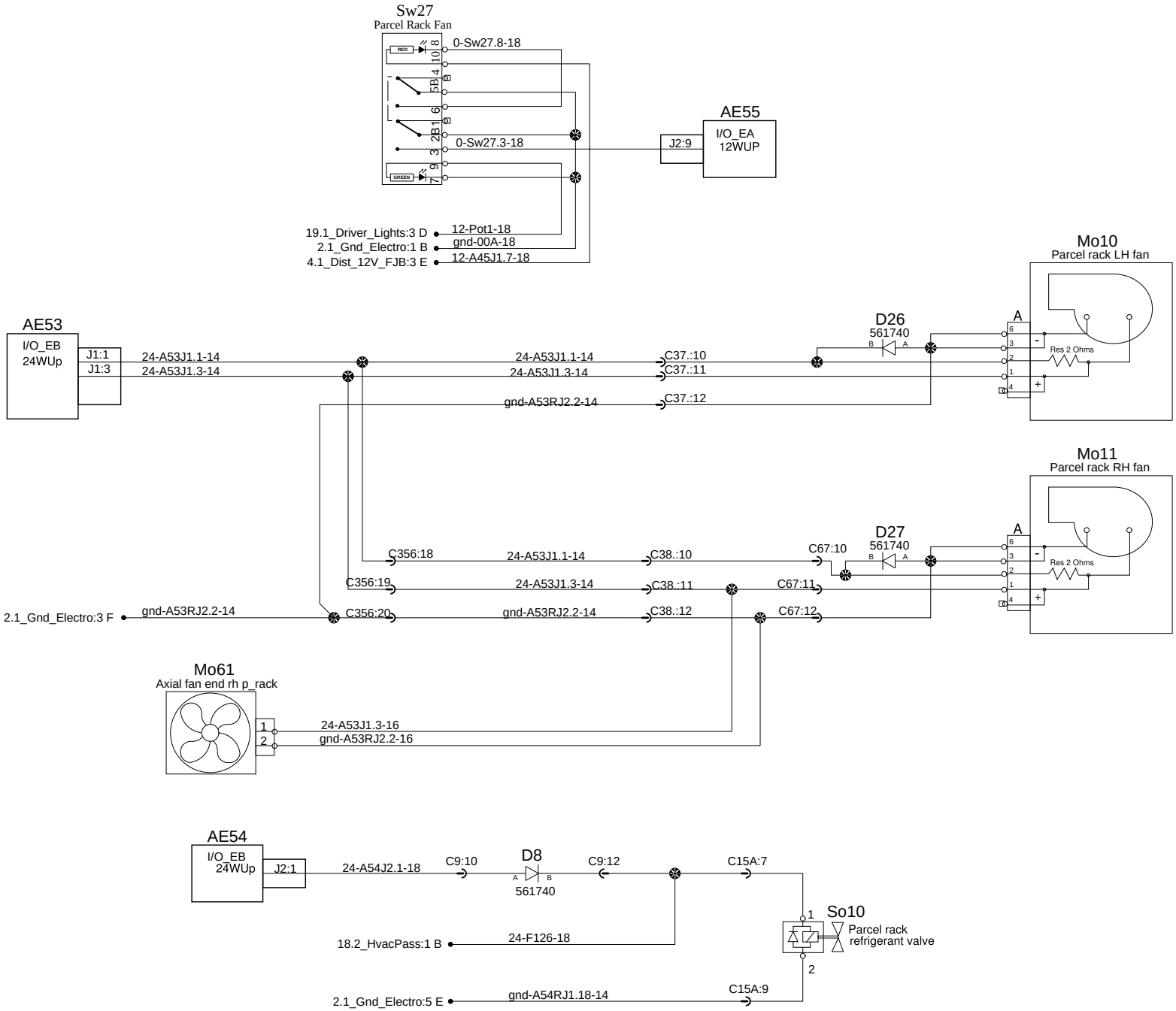

PREVOST®	WIRING DIAGRAM	No:D061640	Page:18.3	Rev:8

Upper defrost

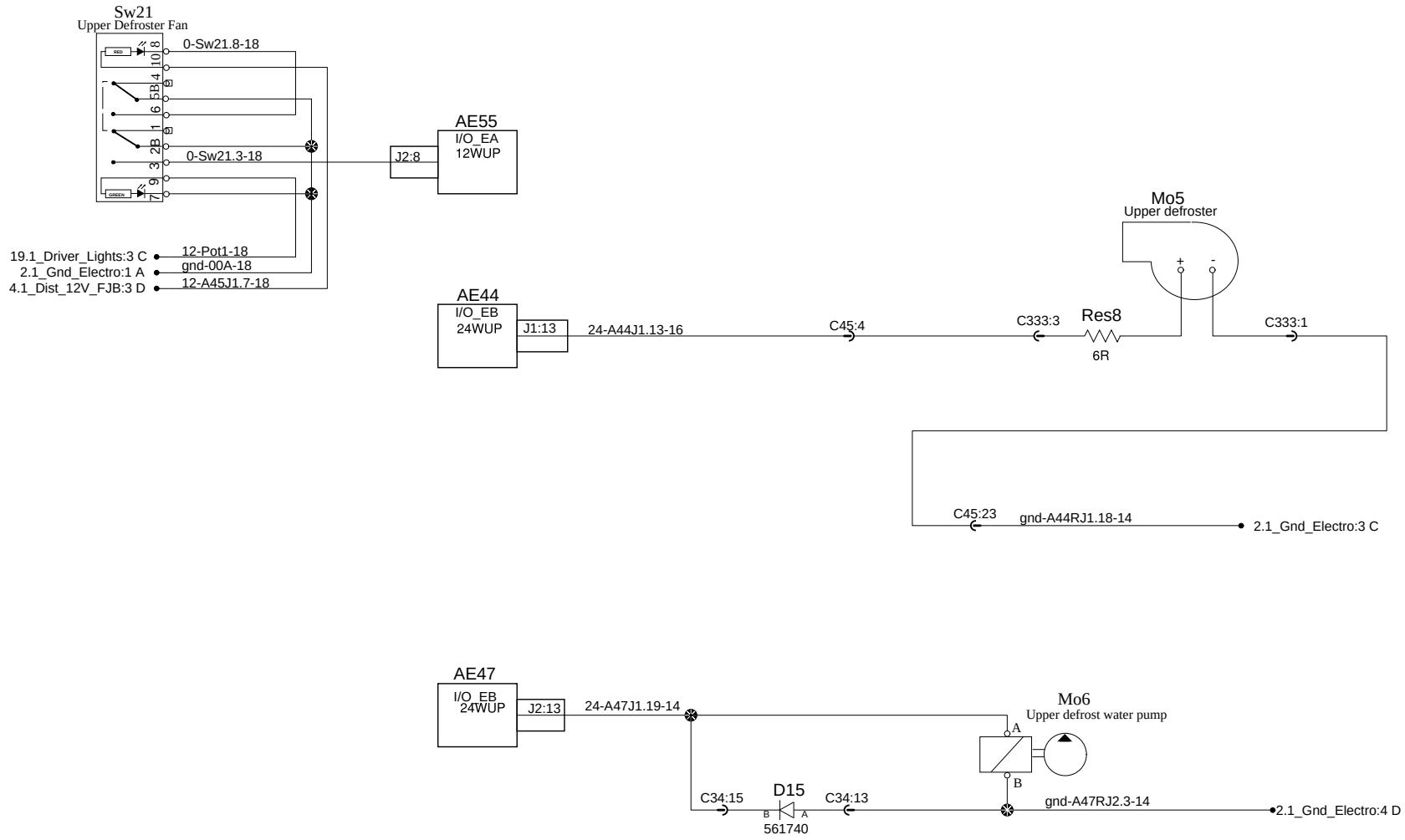

Roof Hatches with fan

Optional or Ready (prewired)

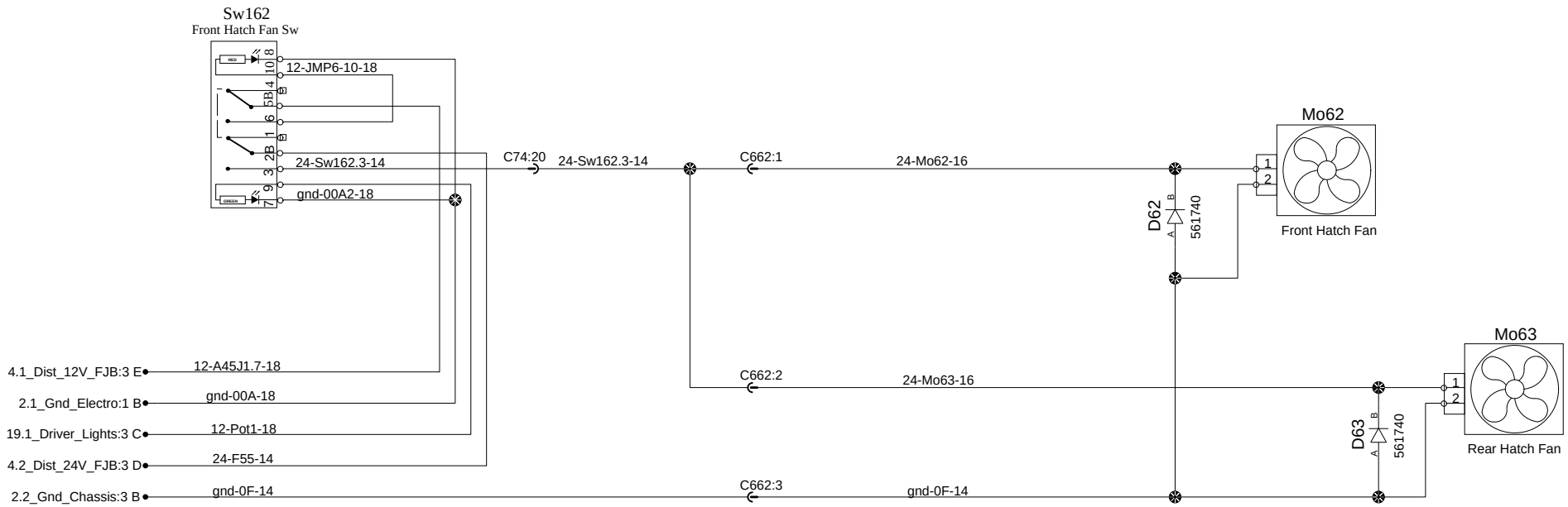

PREVOST CAR	WIRING DIAGRAM	No:D061640	Page:18.5	Rev:11

Roof Hatches with fan

Optional or Ready (prewired)

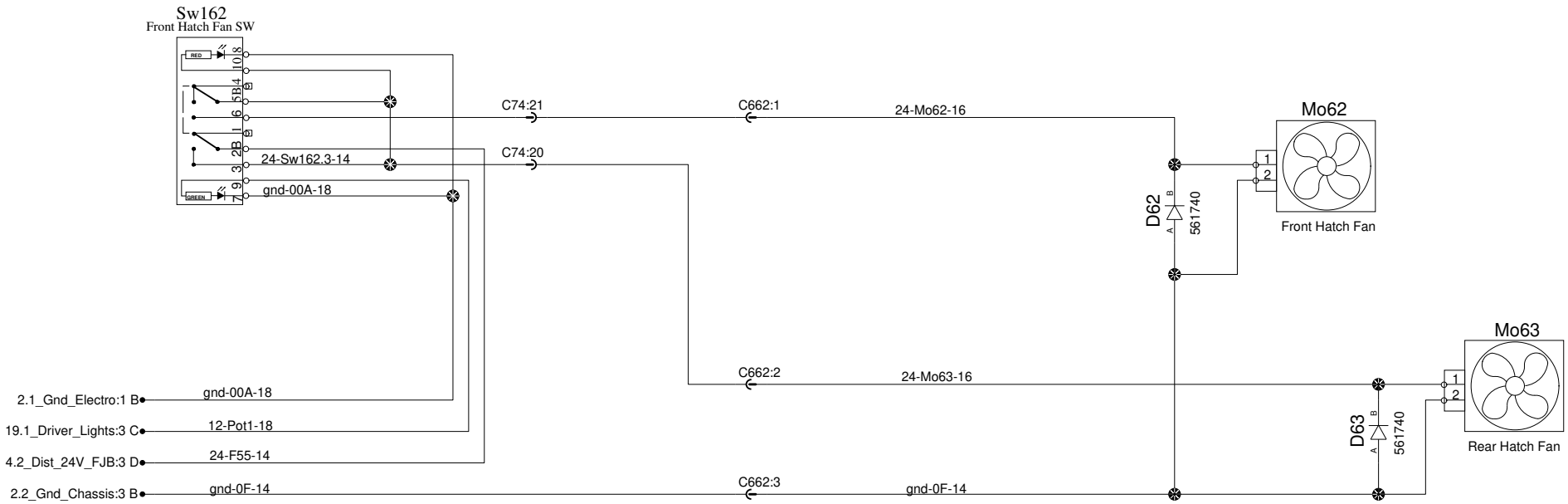

PREVOST CAR	WIRING DIAGRAM	No:D061640	Page:18.5	Rev:15

Driver lights

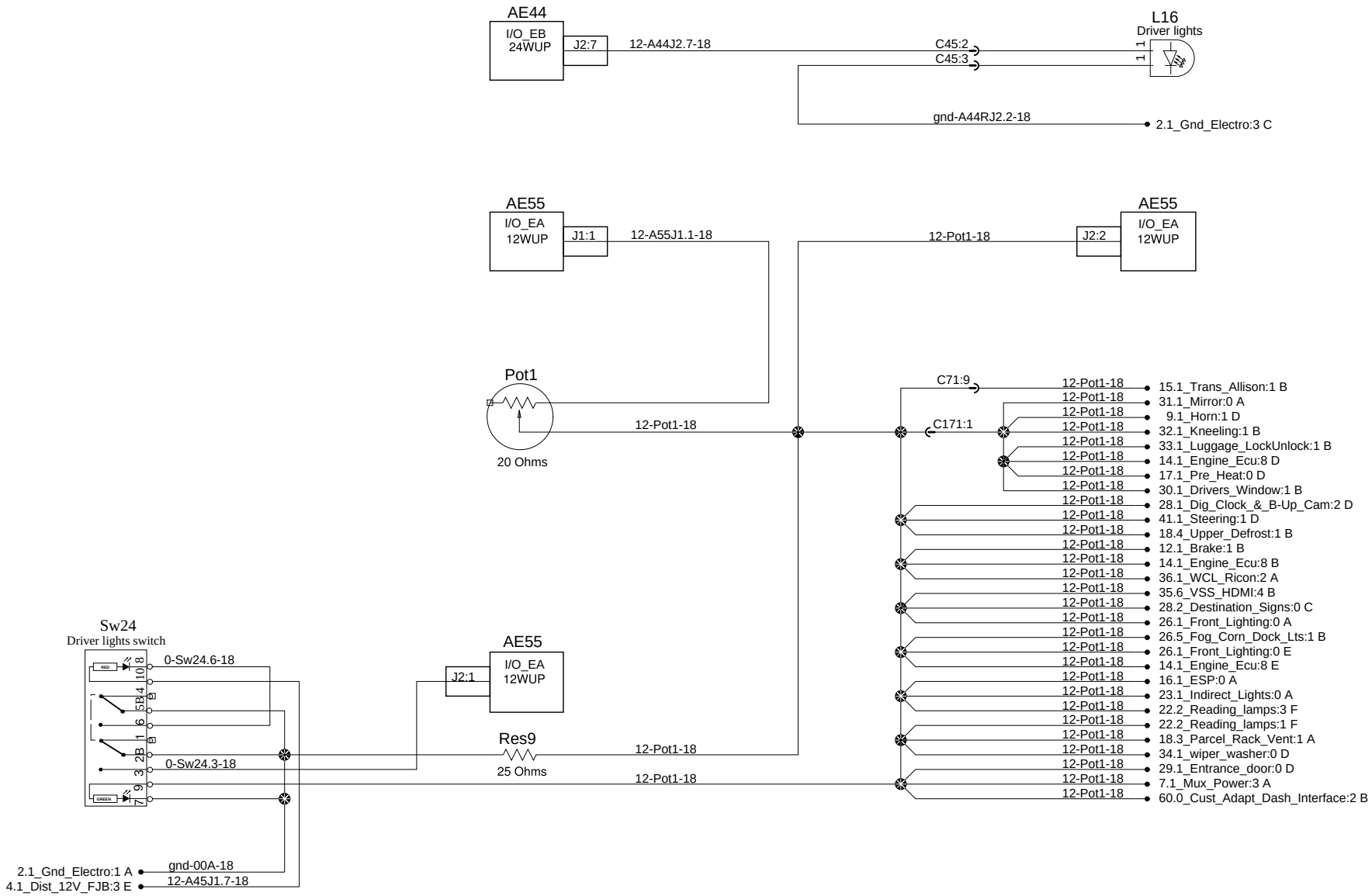

PREVOST®	WIRING DIAGRAM	No:D061640	Page:19.1	Rev:0

Driver lights

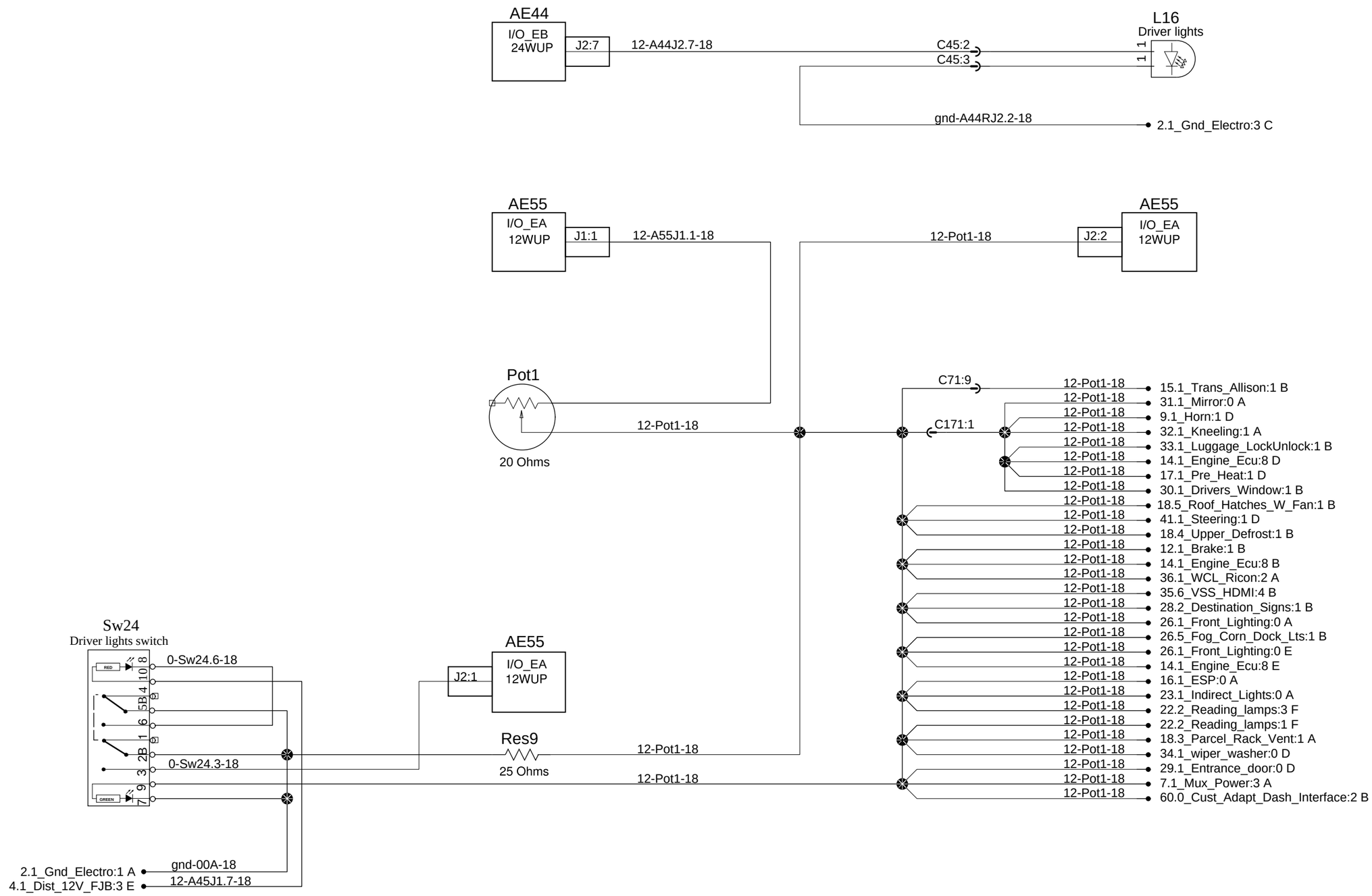

PREVOST®	WIRING DIAGRAM	No:D061640	Page:19.1	Rev:11

Driver lights

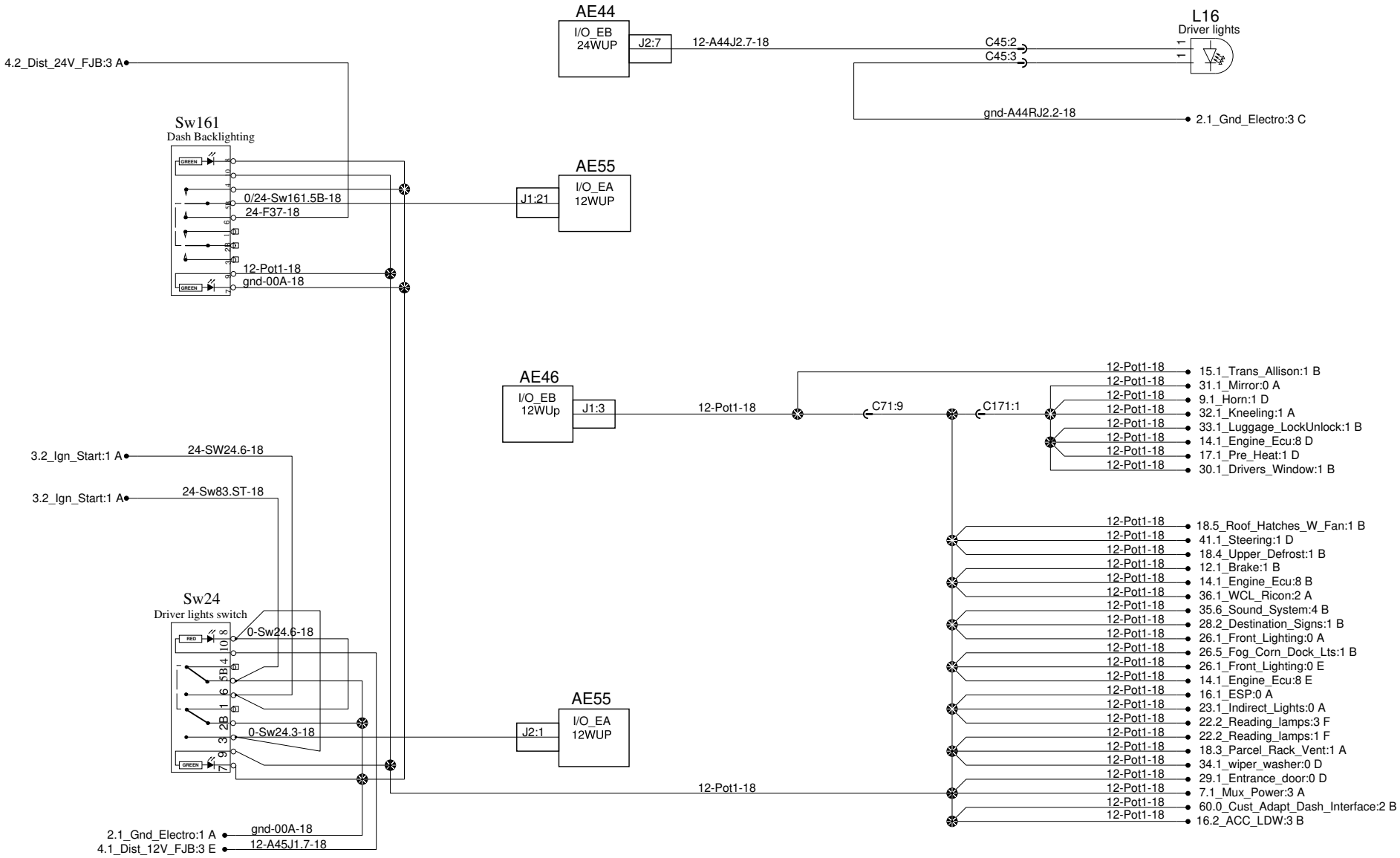

PREVOST®	WIRING DIAGRAM	No:D061640	Page:19.1	Rev:15

Driver lights

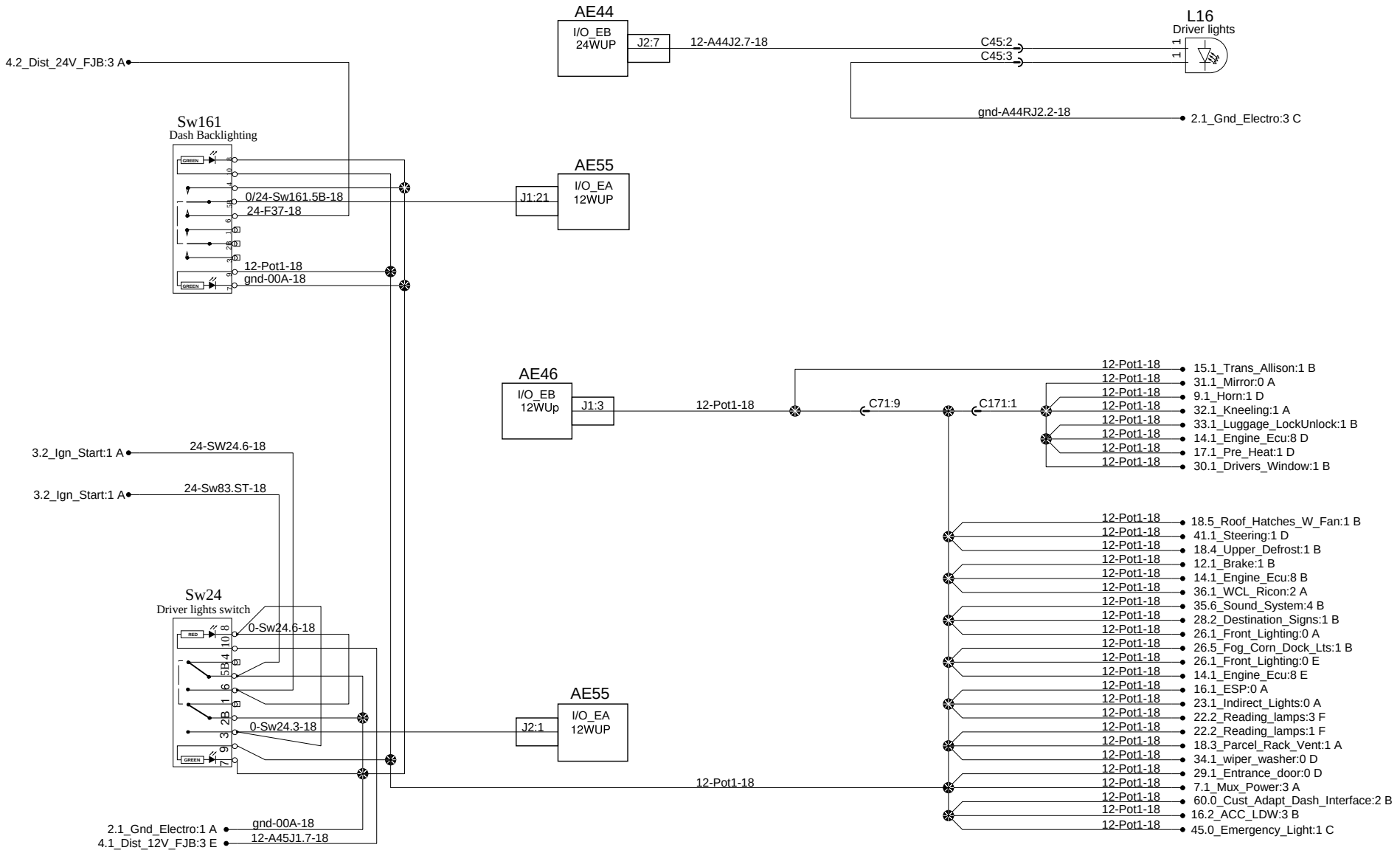

PREVOST®	WIRING DIAGRAM	No:D061640	Page:19.1	Rev:16

Driver lights

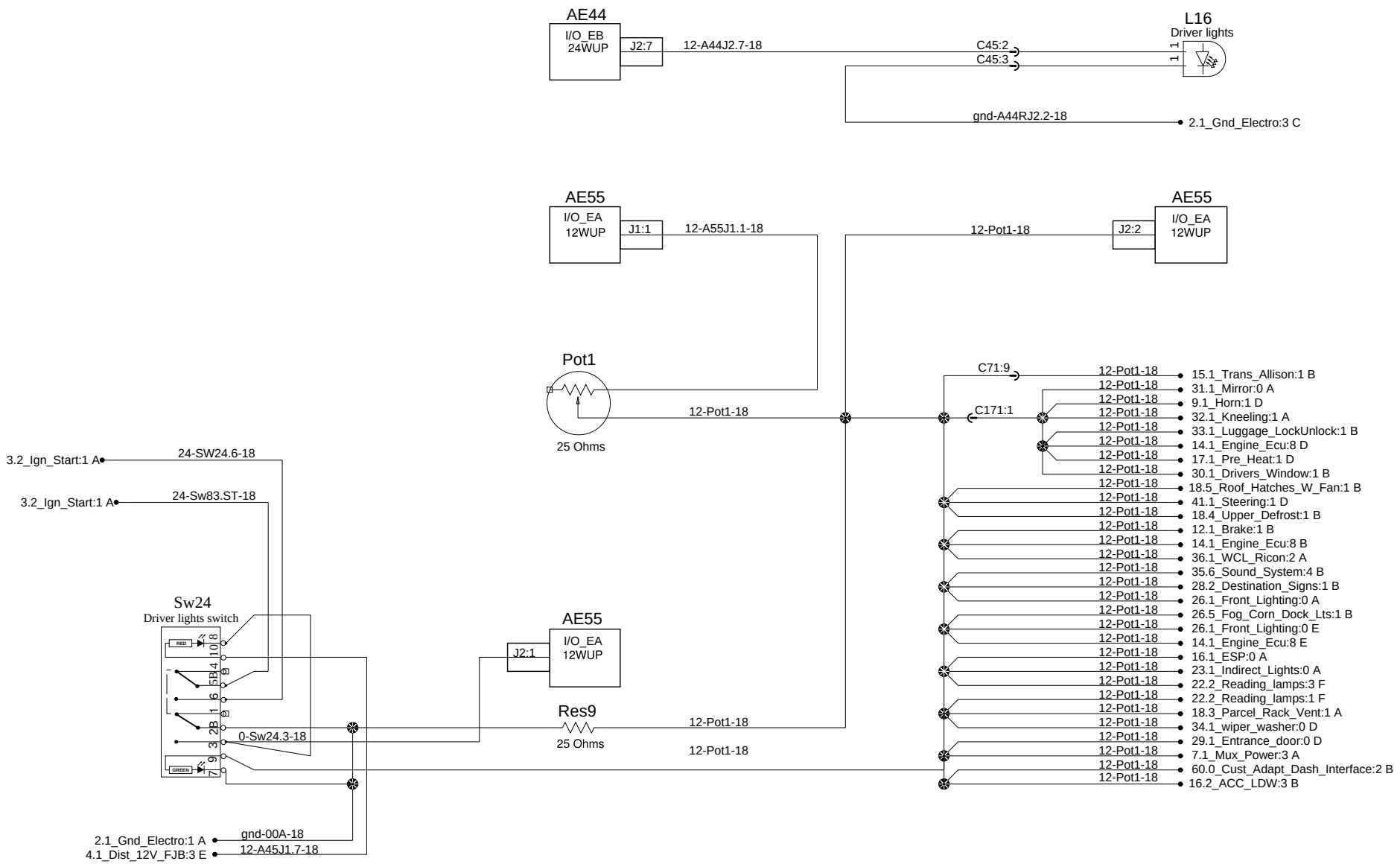

PREVOST®	WIRING DIAGRAM	No:D061640	Page:19.1 SP1	Rev:00

Emergency & Aisle lights

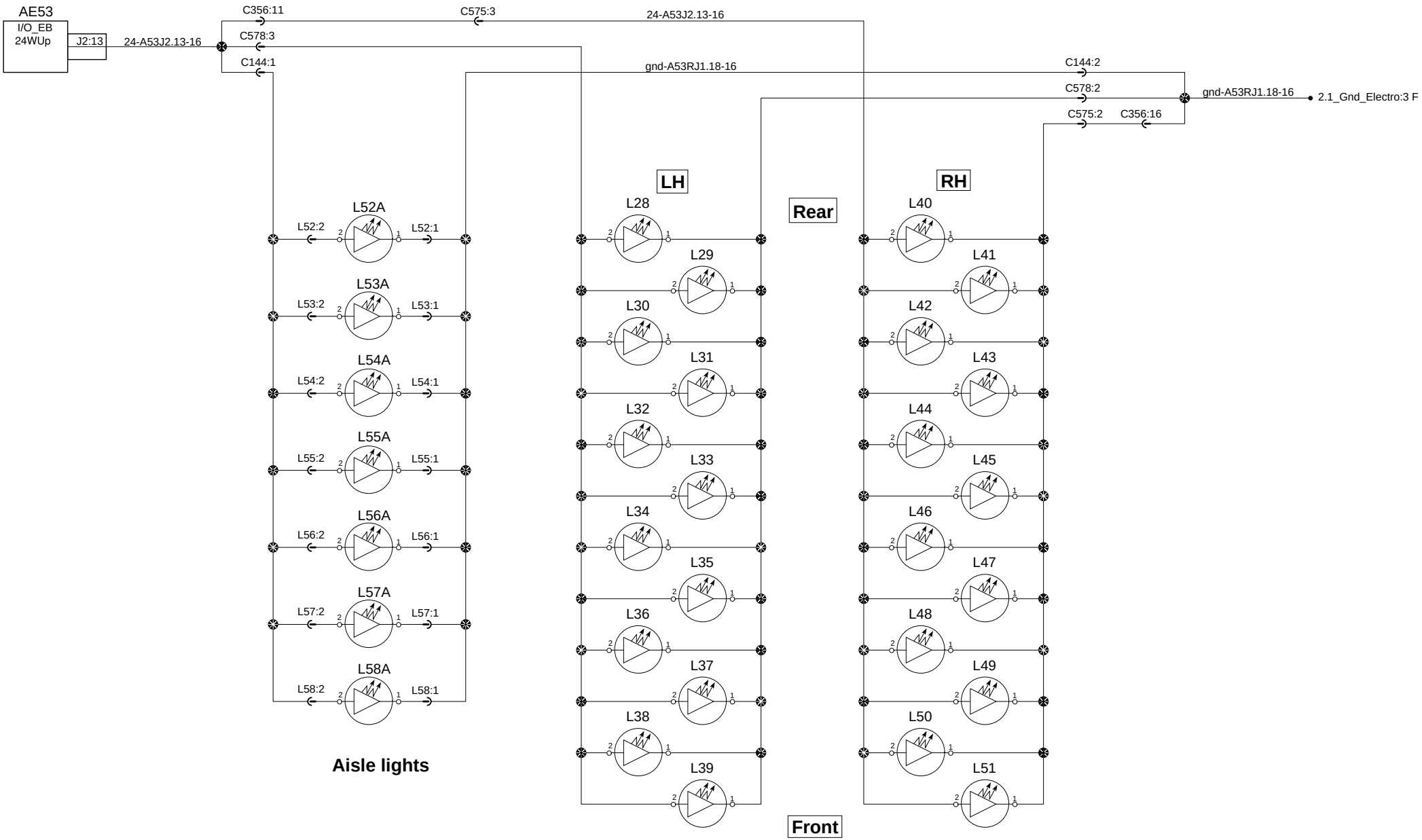

Aisle lights

Emergency lights

PREVOST®	WIRING DIAGRAM	No:D061640	Page:20.1	Rev:0

Emergency & Aisle lights

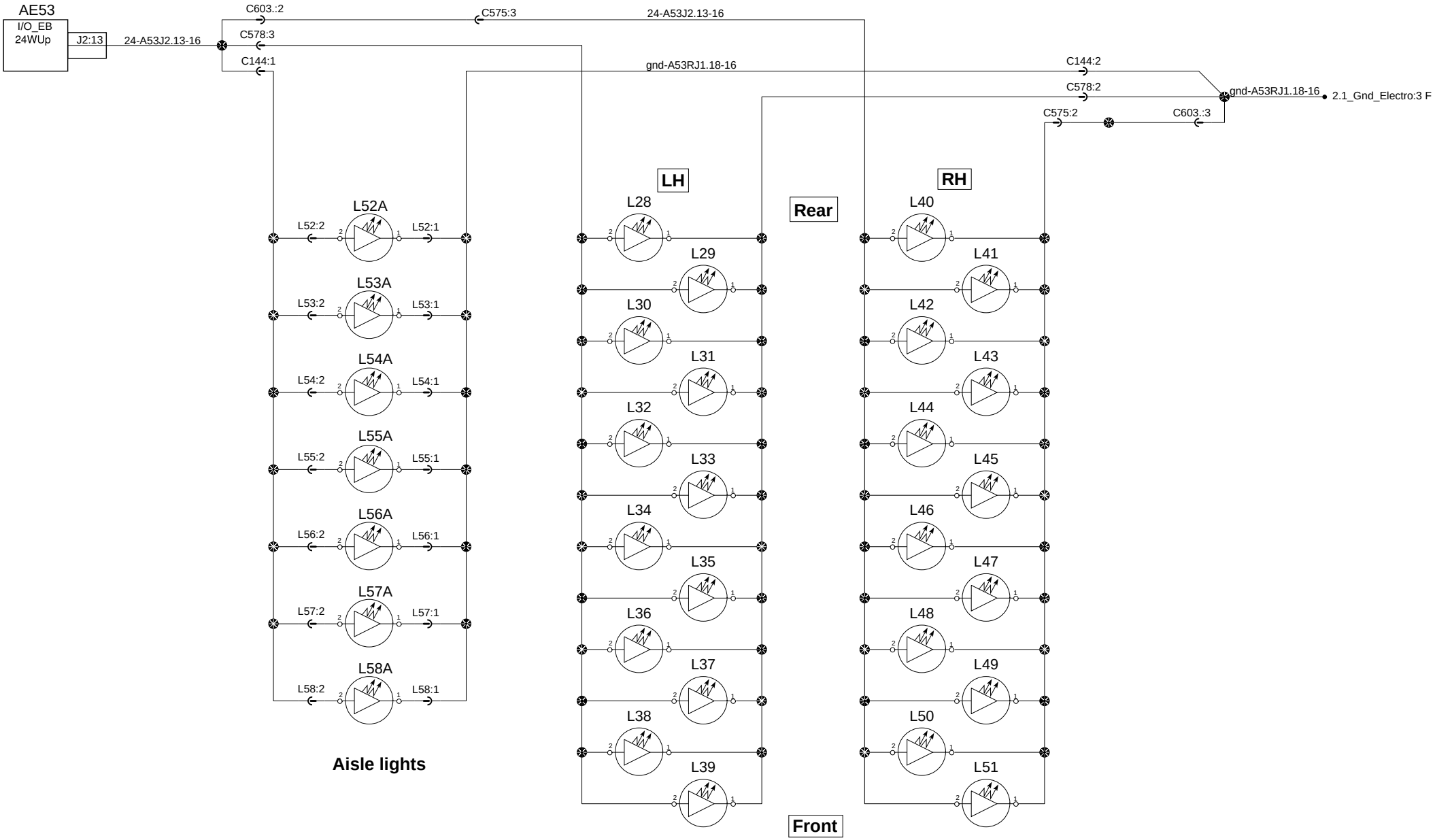

PREVOST®	WIRING DIAGRAM	No:D061640	Page:20.1	Rev:8

Emergency & Aisle lights

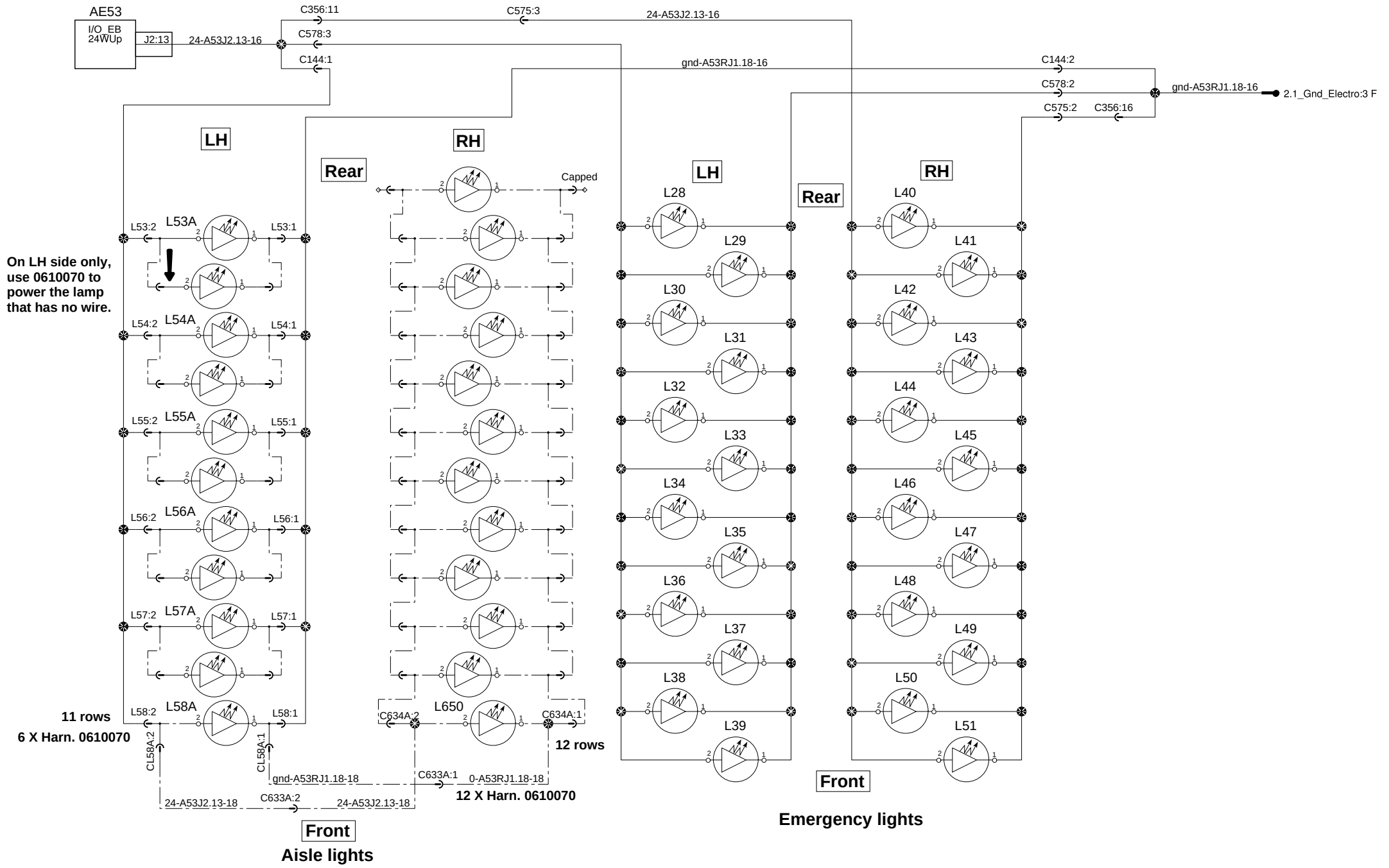

PREVOST®	WIRING DIAGRAM	No:D061640	Page:20.1 SP2	Rev:02

Parameter Lights

Customer Adaptation

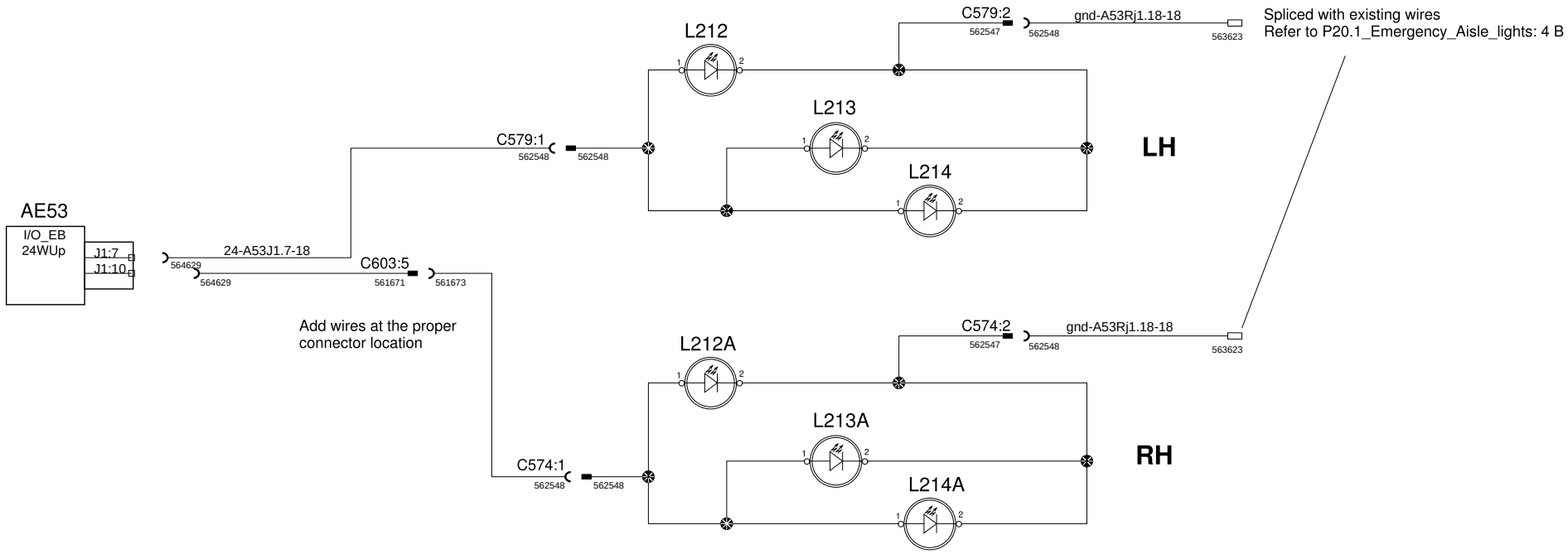

PREVOST®	WIRING DIAGRAM	No:D061640	Page:21.1 SP1	Rev:00

Reading lamp and hostess chime

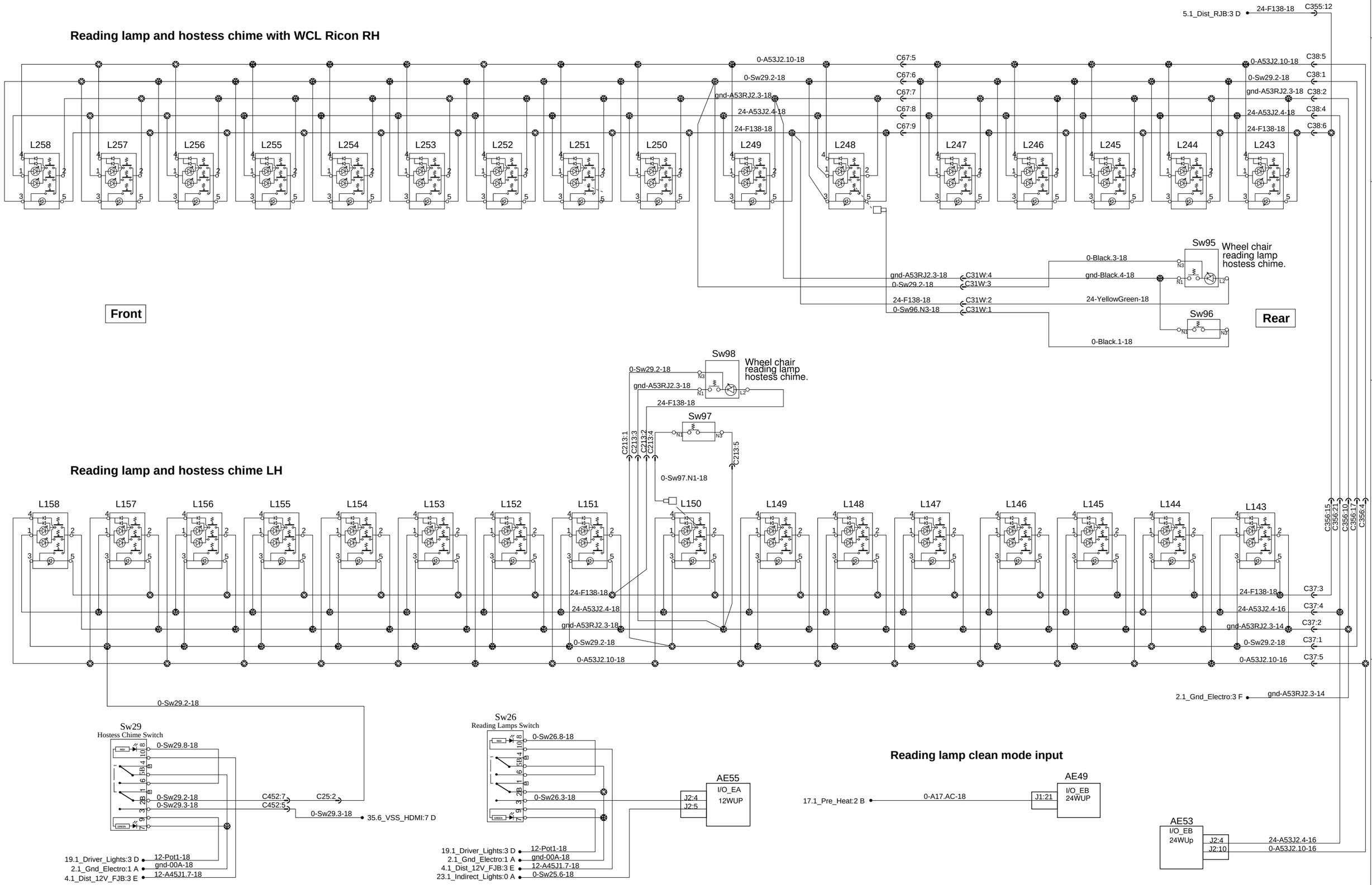

Rev:0

Page:22.2

No:D061640

WIRING DIAGRAM

PREVOST®

Reading lamp and hostess chime

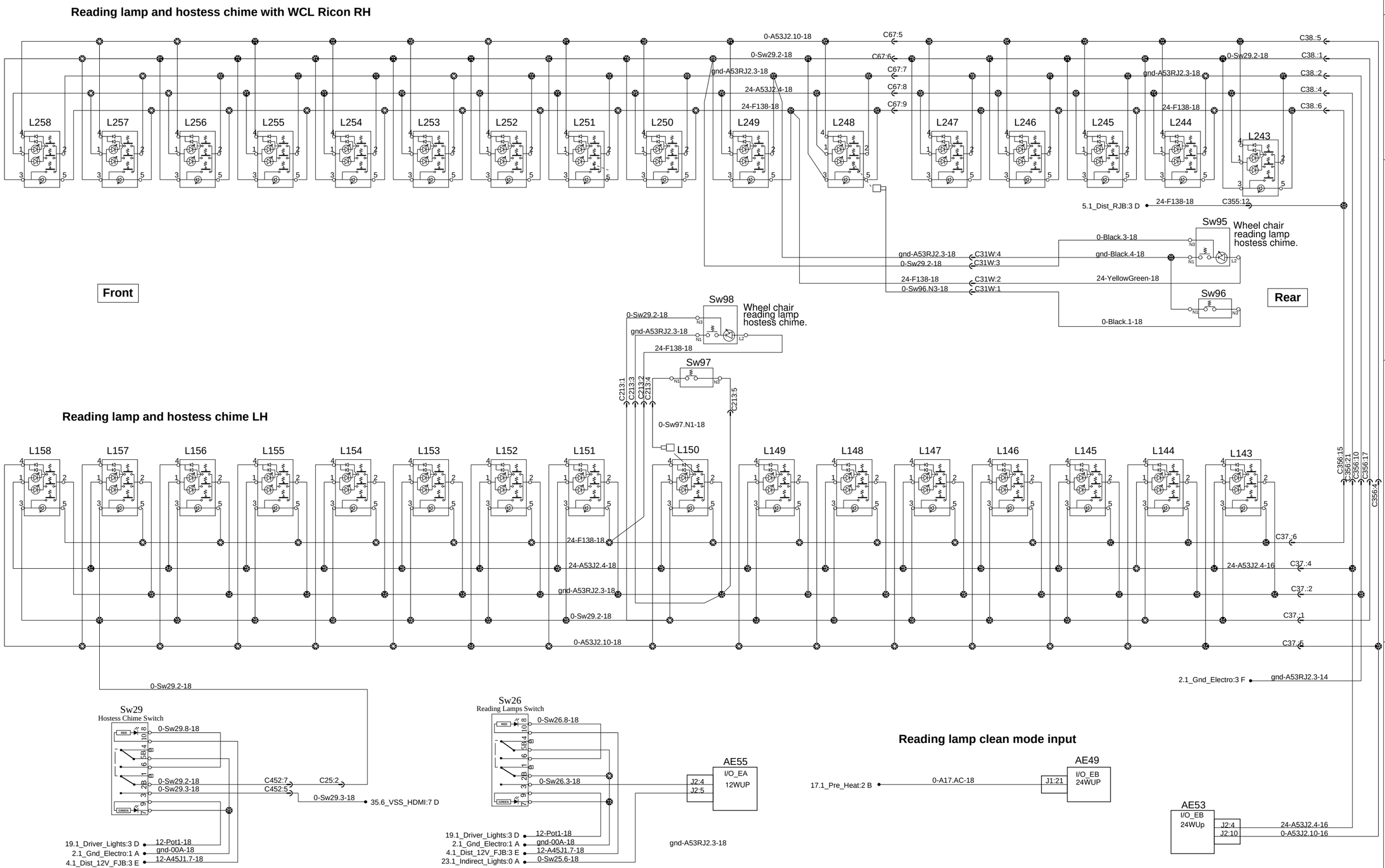

Rev:8

Page:22.2

No:D061640

WIRING DIAGRAM

PREVOST

Reading lamp and hostess chime

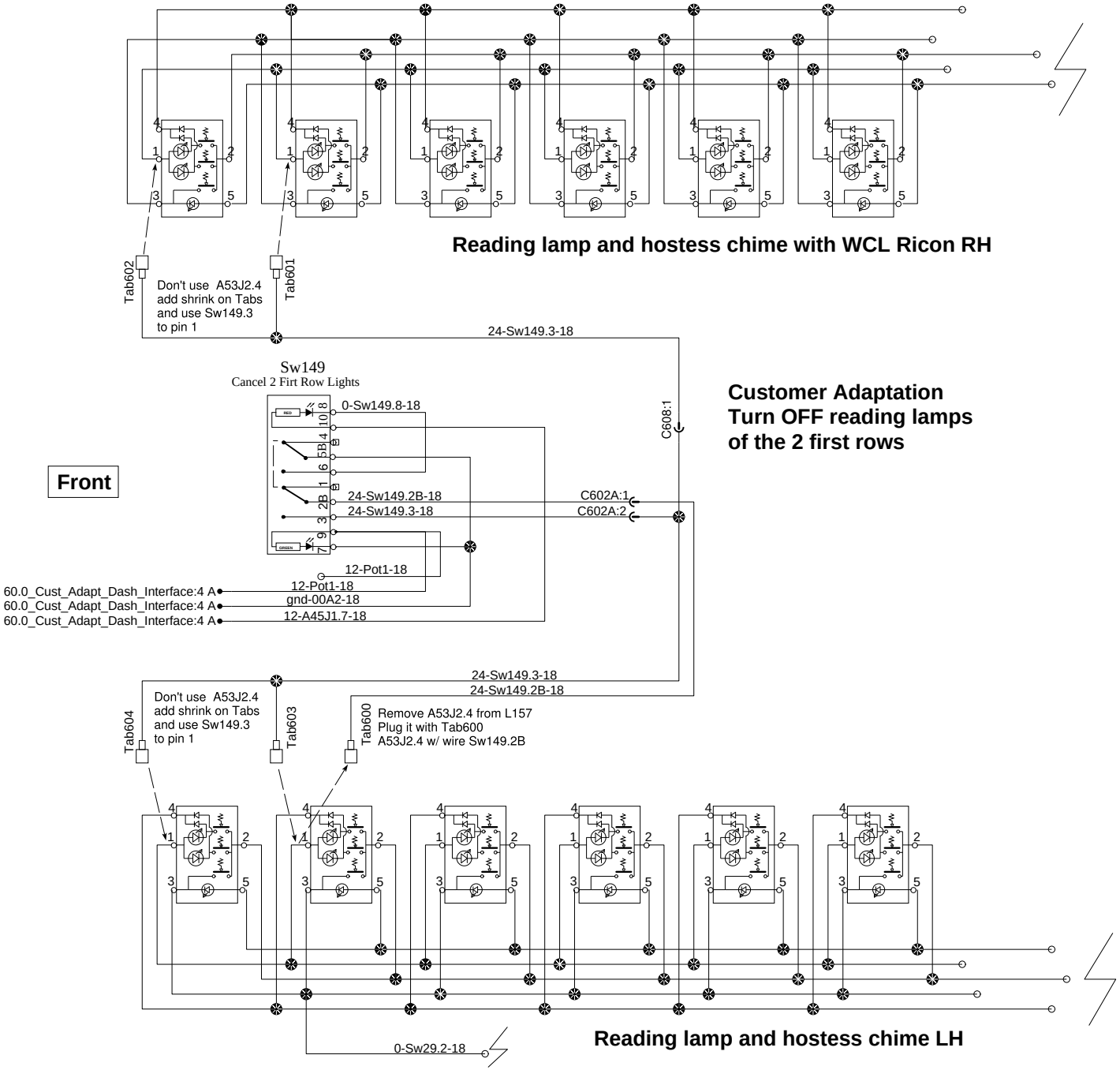

PREVOST®	WIRING DIAGRAM	No:D061640	Page:22.2 SP1	Rev:00

Indirect lighting

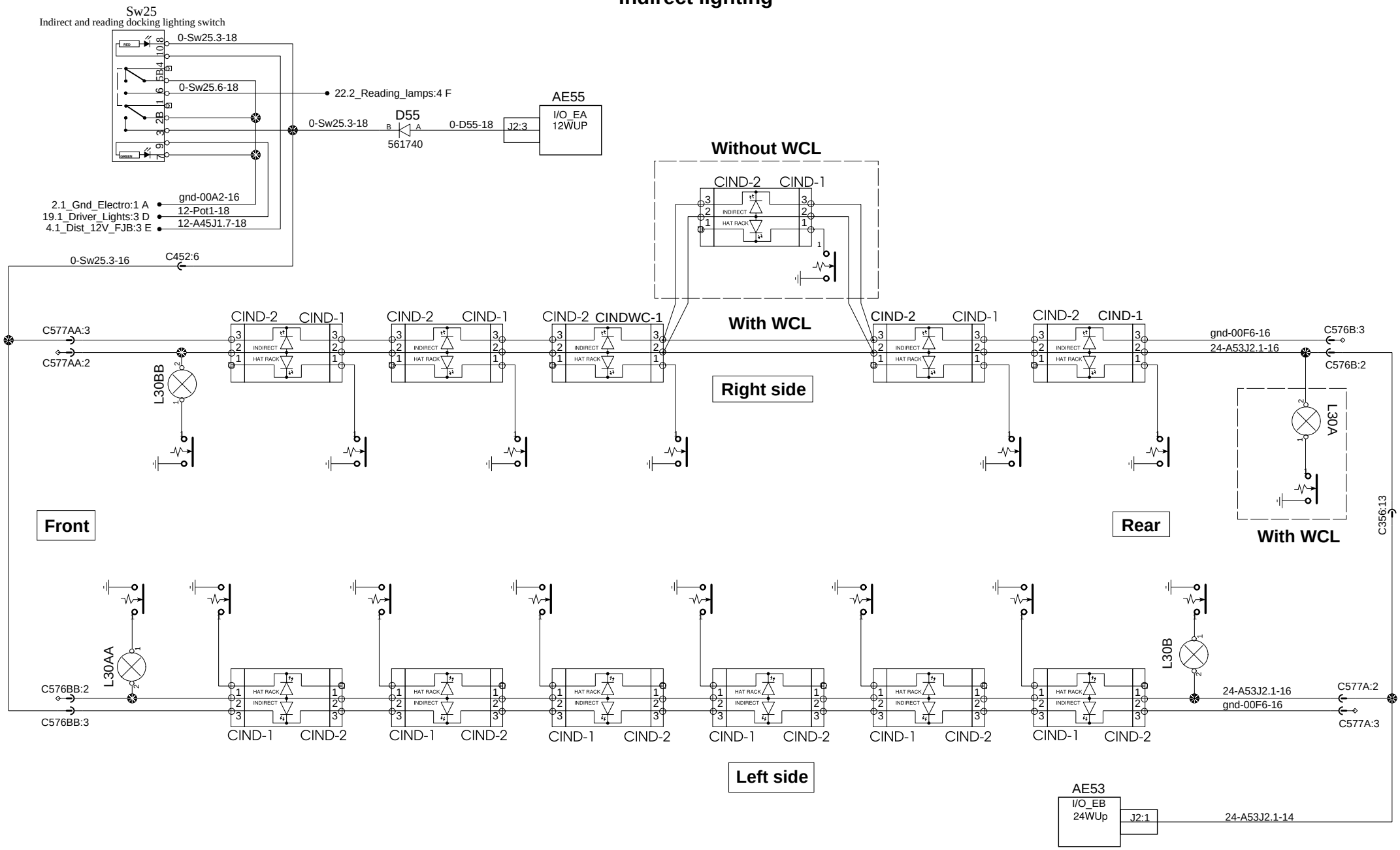

PREVOST®	WIRING DIAGRAM	No:D061640	Page:23.1	Rev:0

Indirect lighting

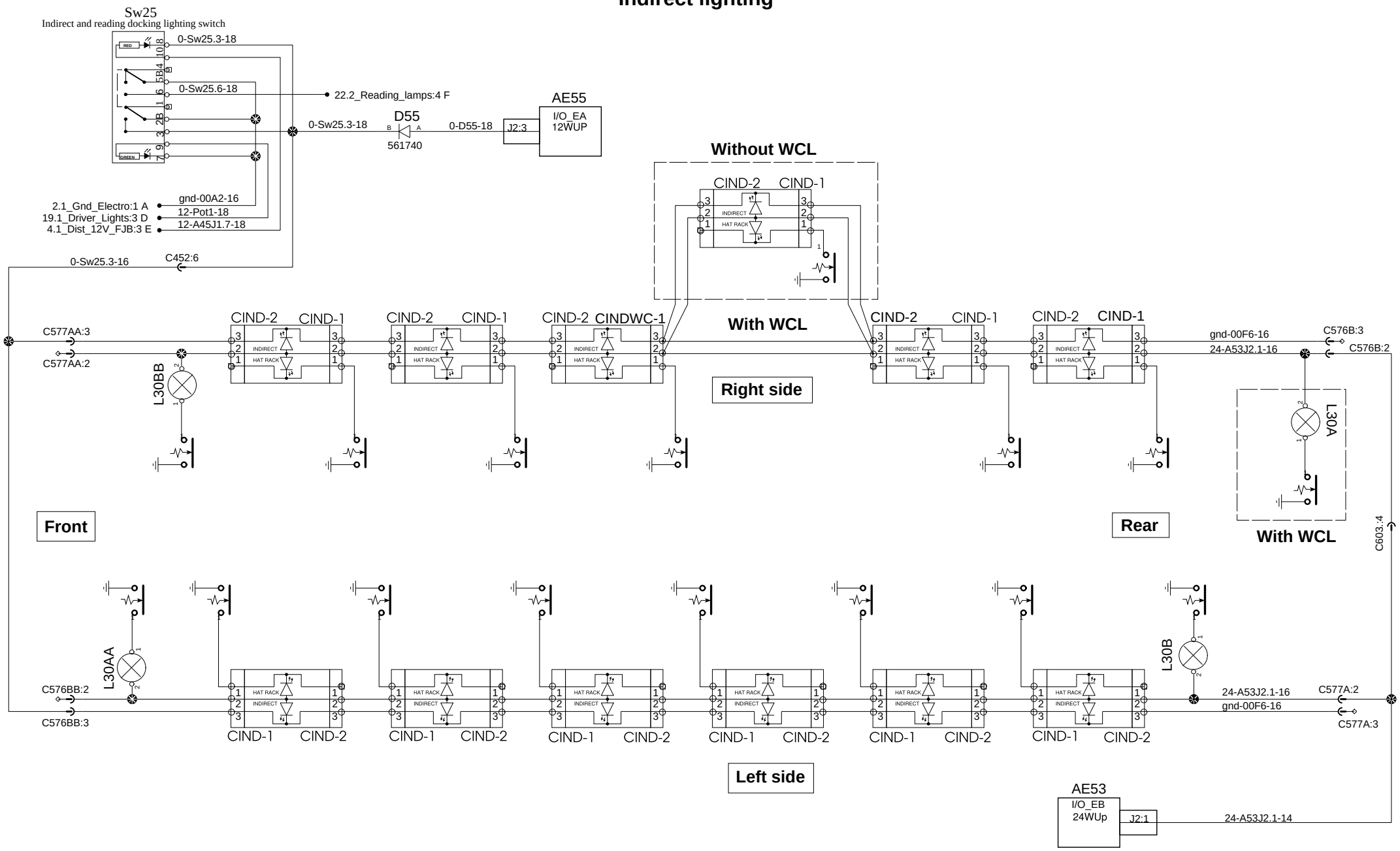

PREVOST®	WIRING DIAGRAM	No:D061640	Page:23.1	Rev:8

Engine and RJB compartments lighting

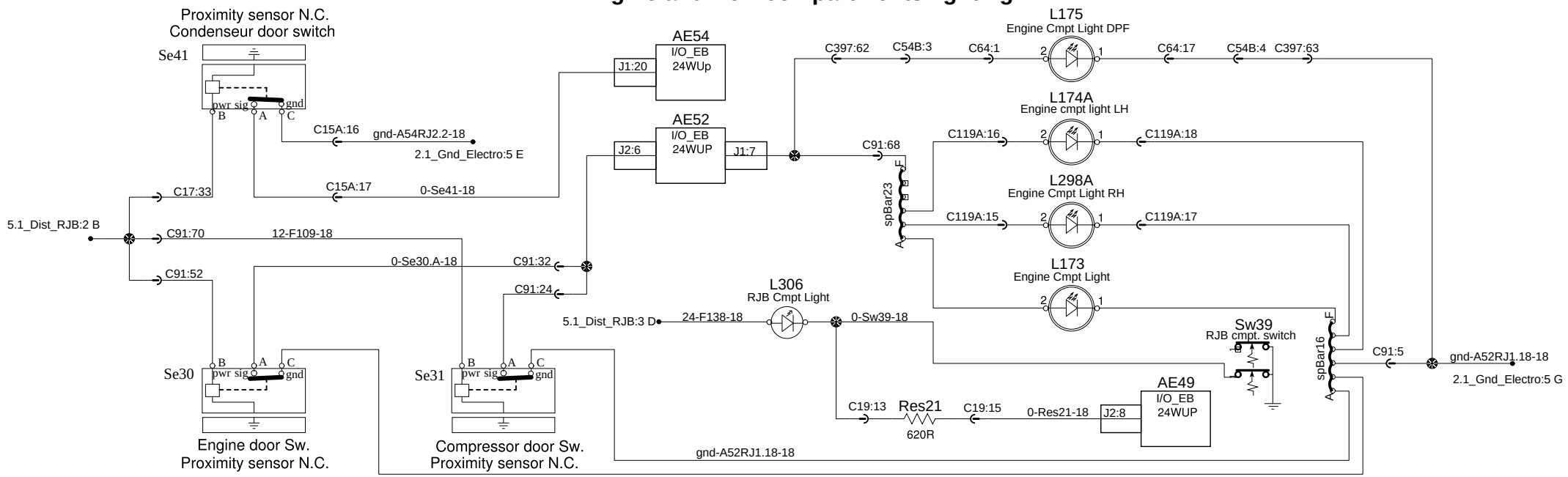

Luggages compartment lighting

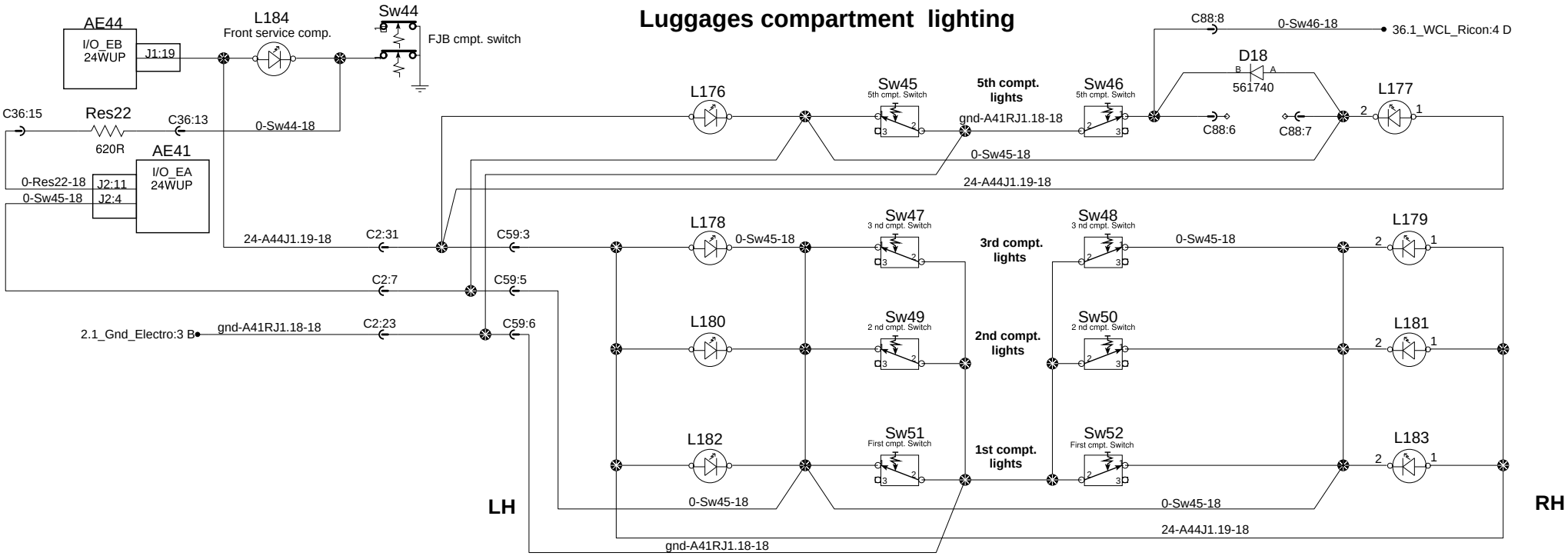

PREVOST®	WIRING DIAGRAM	No:D061640	Page:25.1	Rev:0

Front flashers, Markers, Clearance and Head lights

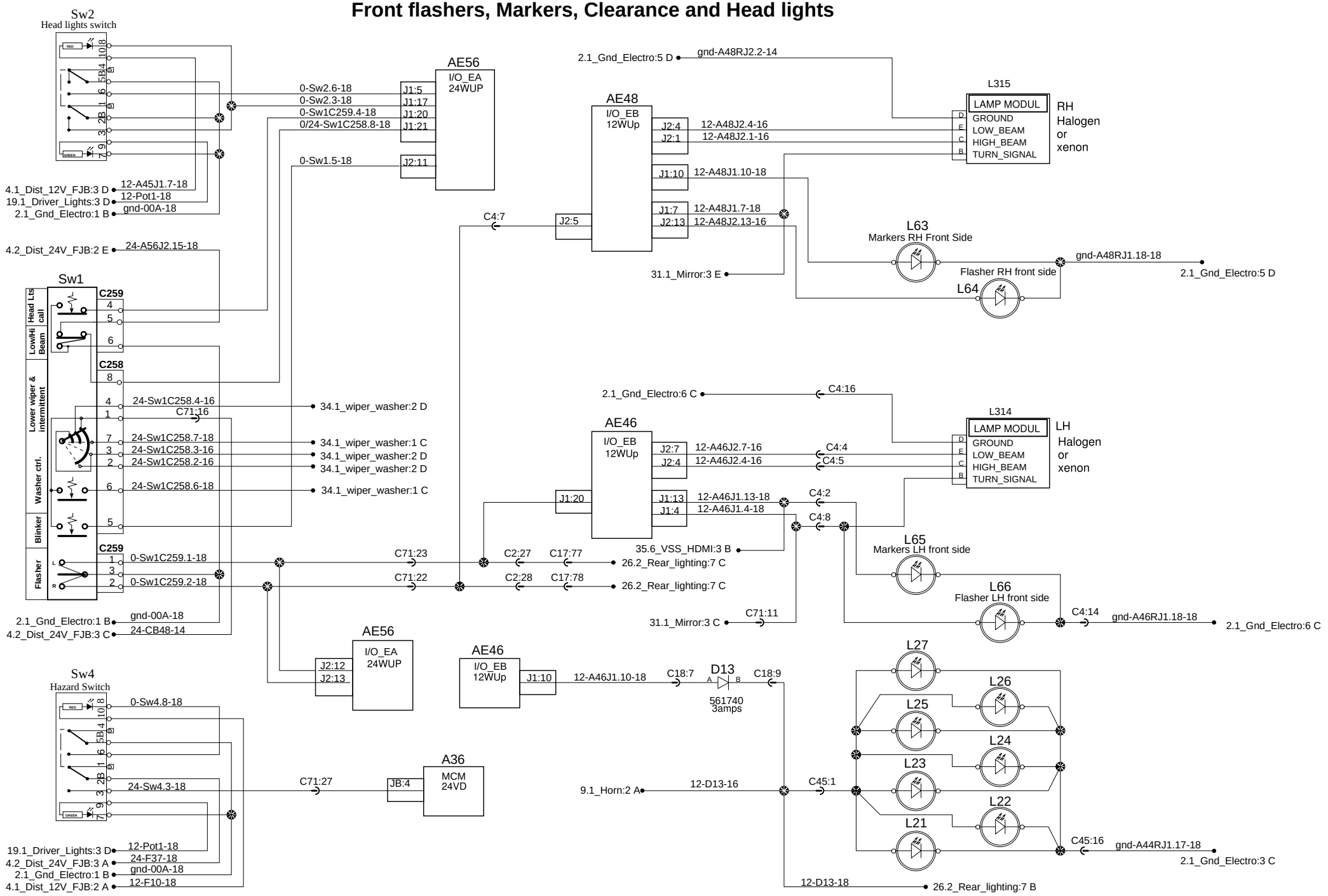

PREVOST®	WIRING DIAGRAM	No:D061640	Page:26.1	Rev:0

Rear flashers, Markers, Tail and stop lights

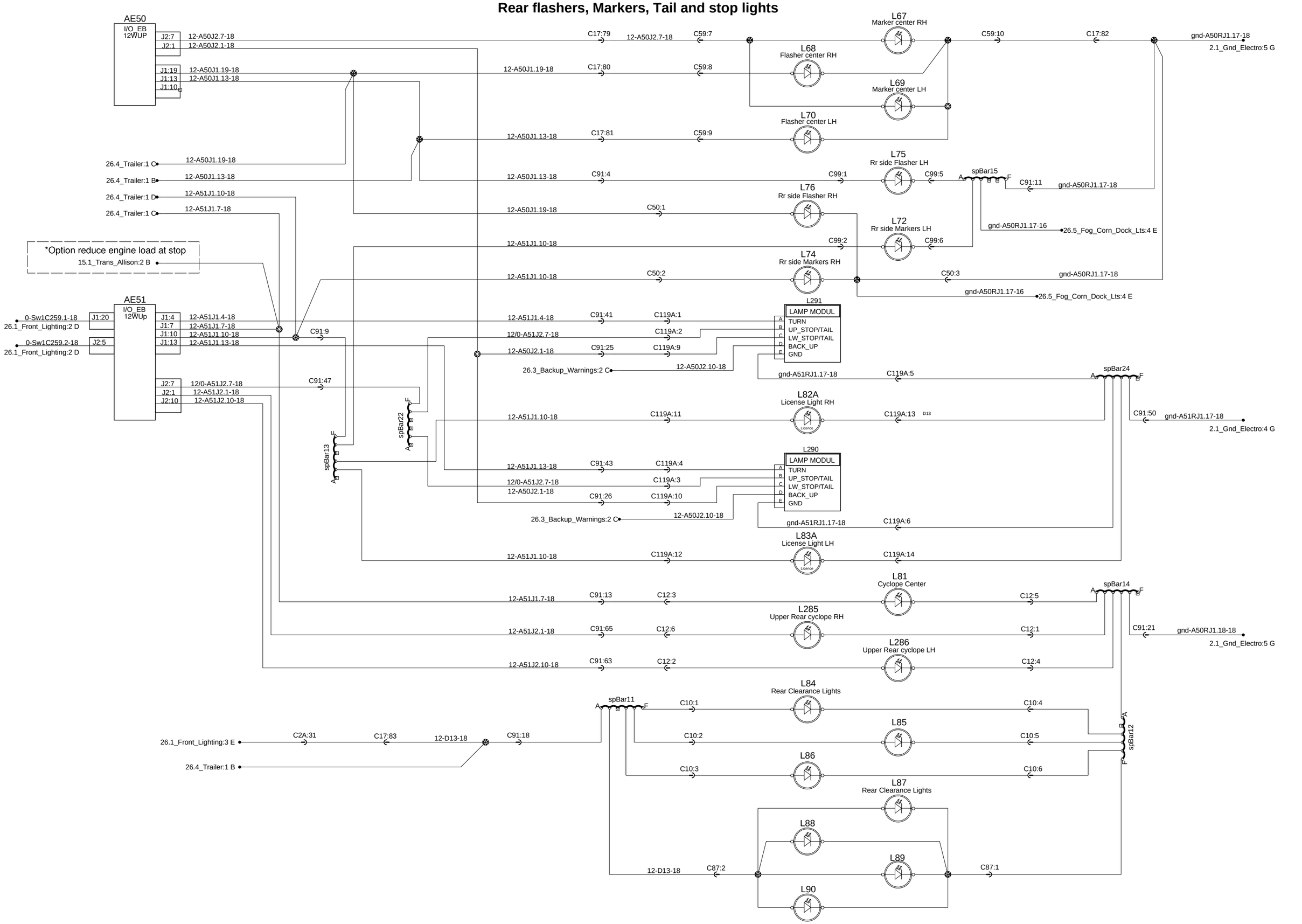

Rev:0

Page:26.2

No:D061640

WIRING DIAGRAM

PREVOST®

Rear flashers, Markers, Tail and stop lights

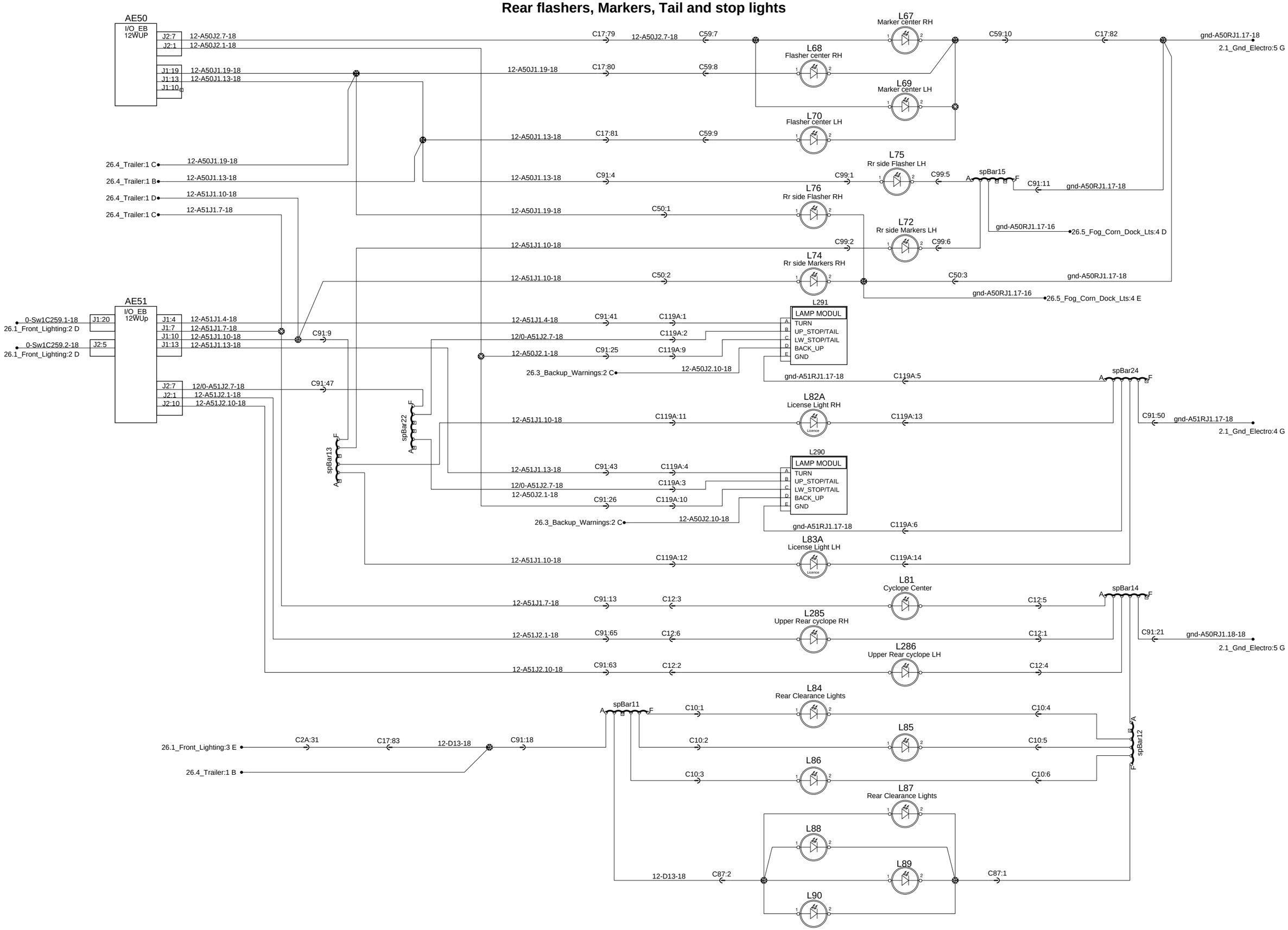

Rev:1

Page:26.2

No:D061640

WIRING DIAGRAM

PREVOST®

Backup warnings

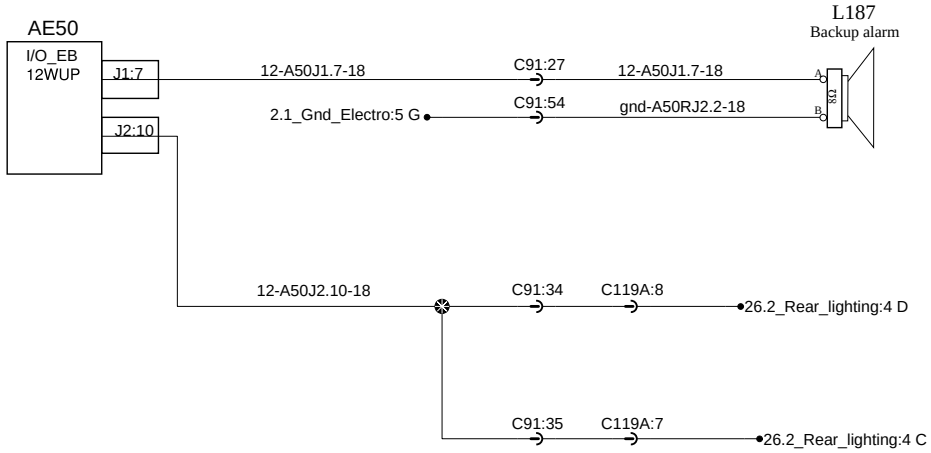

Trailer interface

SAE J560 Standard Trailer socket

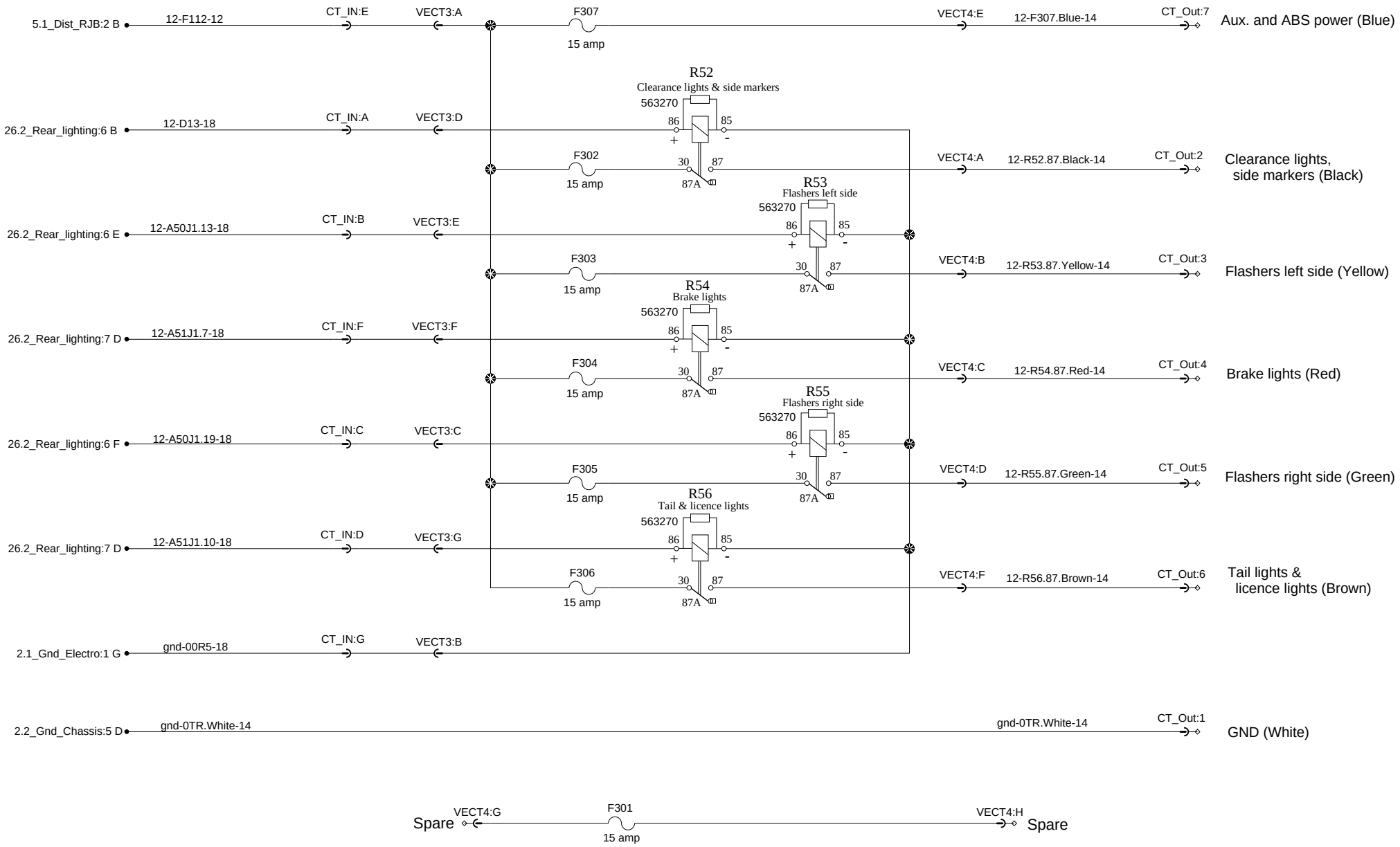

PREVOST®	WIRING DIAGRAM	No:D061640	Page:26.4	Rev:0

Cornering and Fog lights (Option)

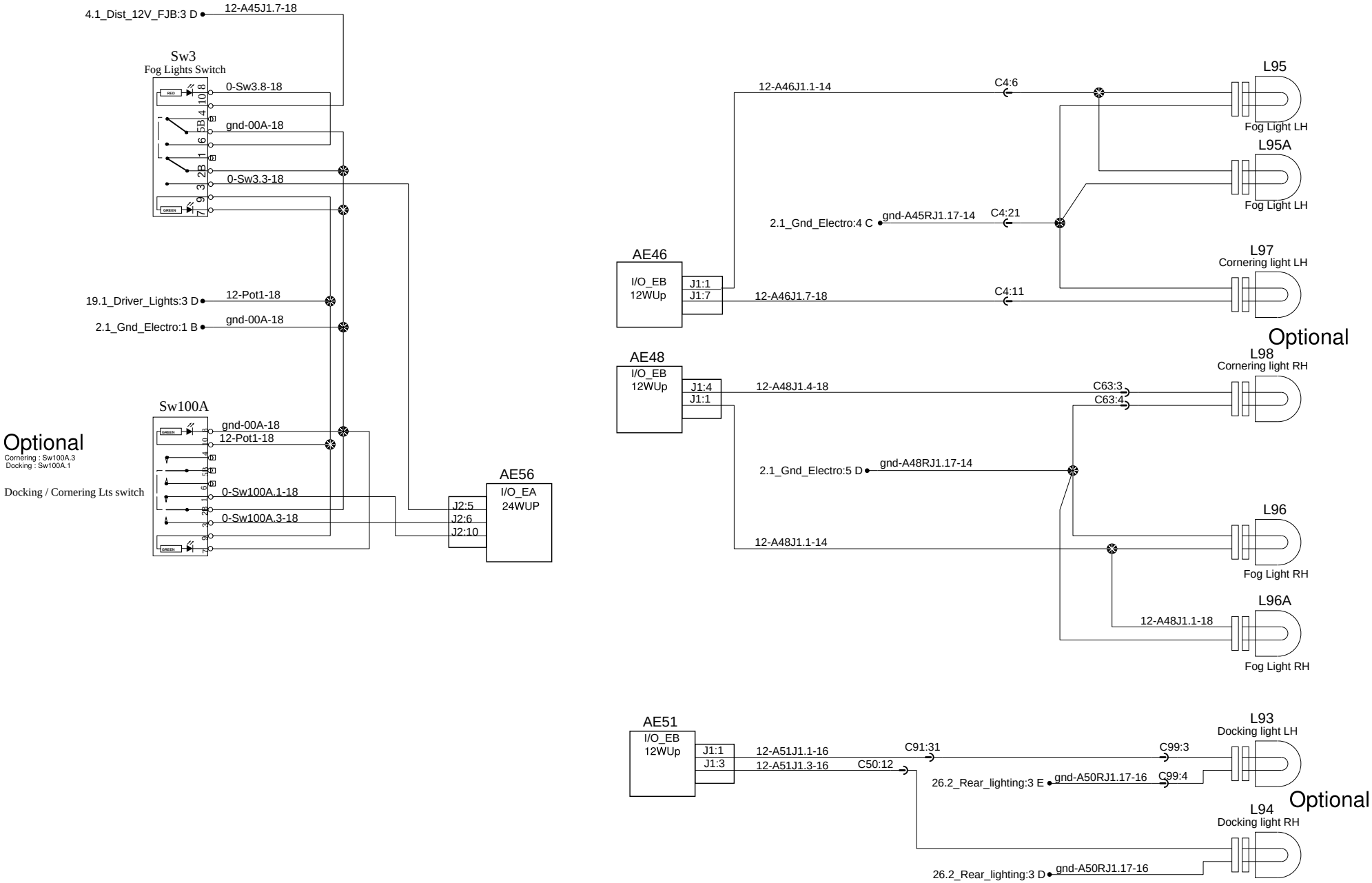

PREVOST®	WIRING DIAGRAM	No:D061640	Page:26.5	Rev:0

Cornering and Fog lights

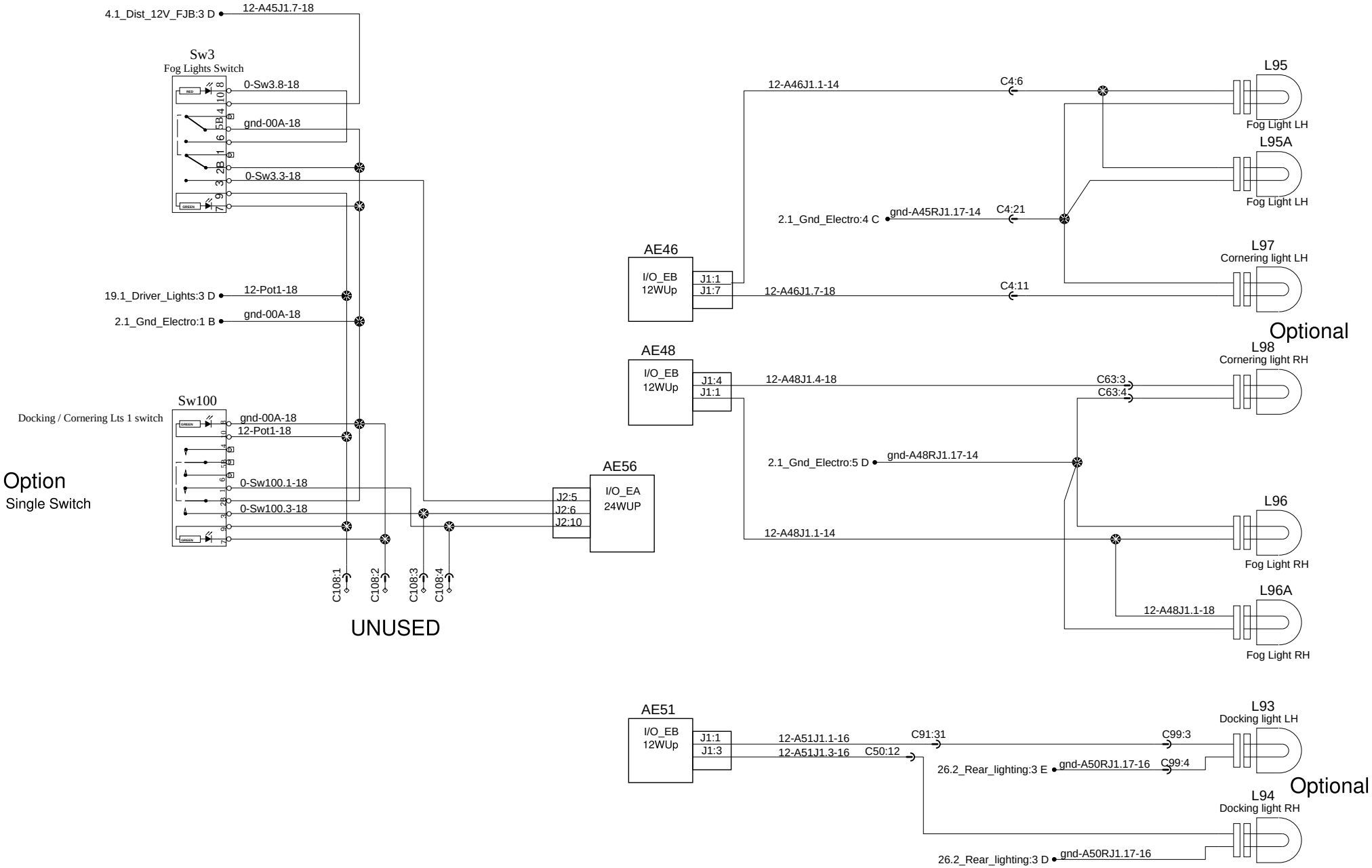

PREVOST®	WIRING DIAGRAM	No:D061640	Page:26.5	Rev:2

Windows ajar

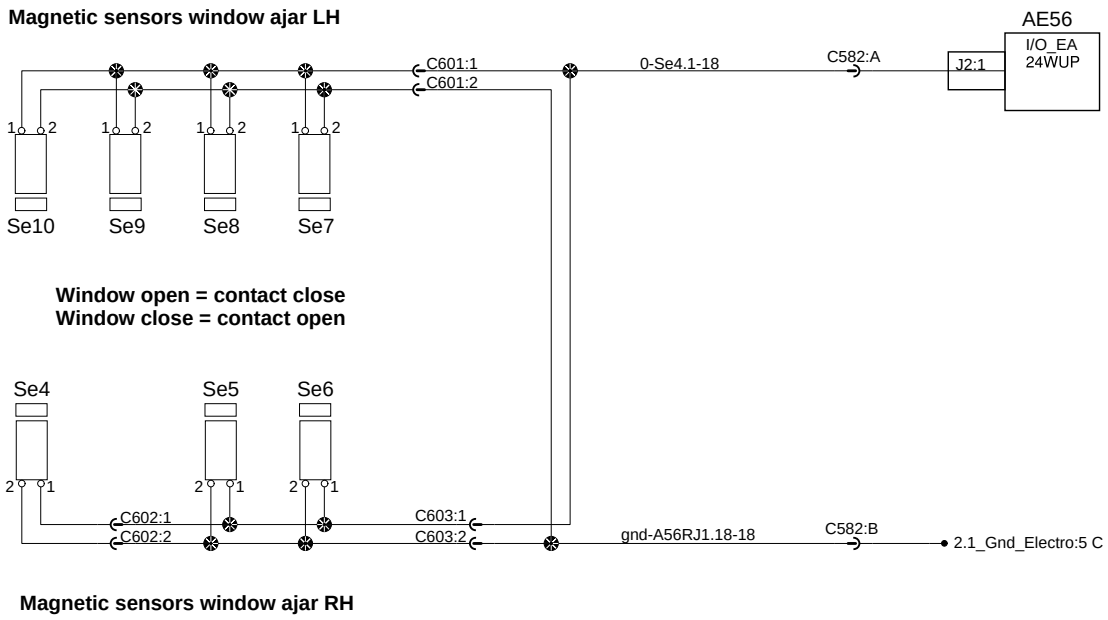

Digital clock & Back-up Camera

12 or 24 hours digital clock

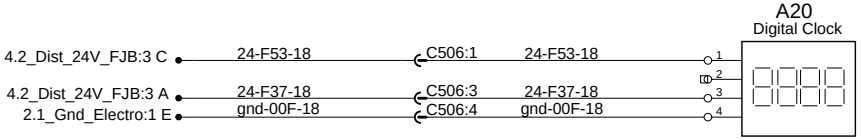

Back-up camera

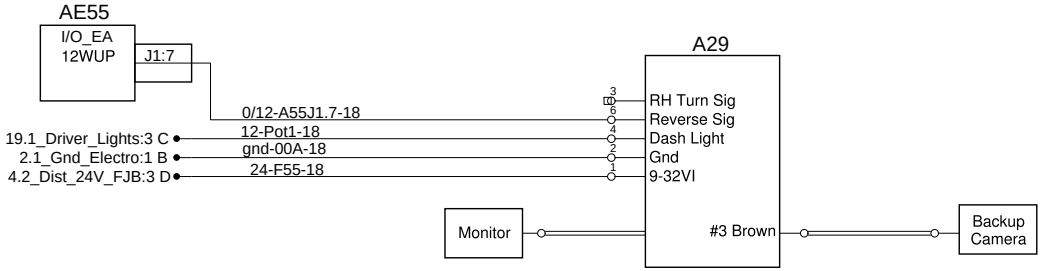

Digital clock & Backup camera

12 or 24 hours digital clock

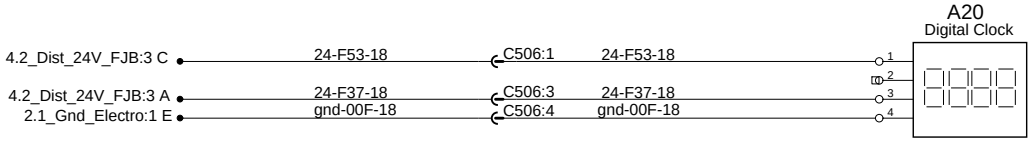

Backup camera or Surrounding Camera

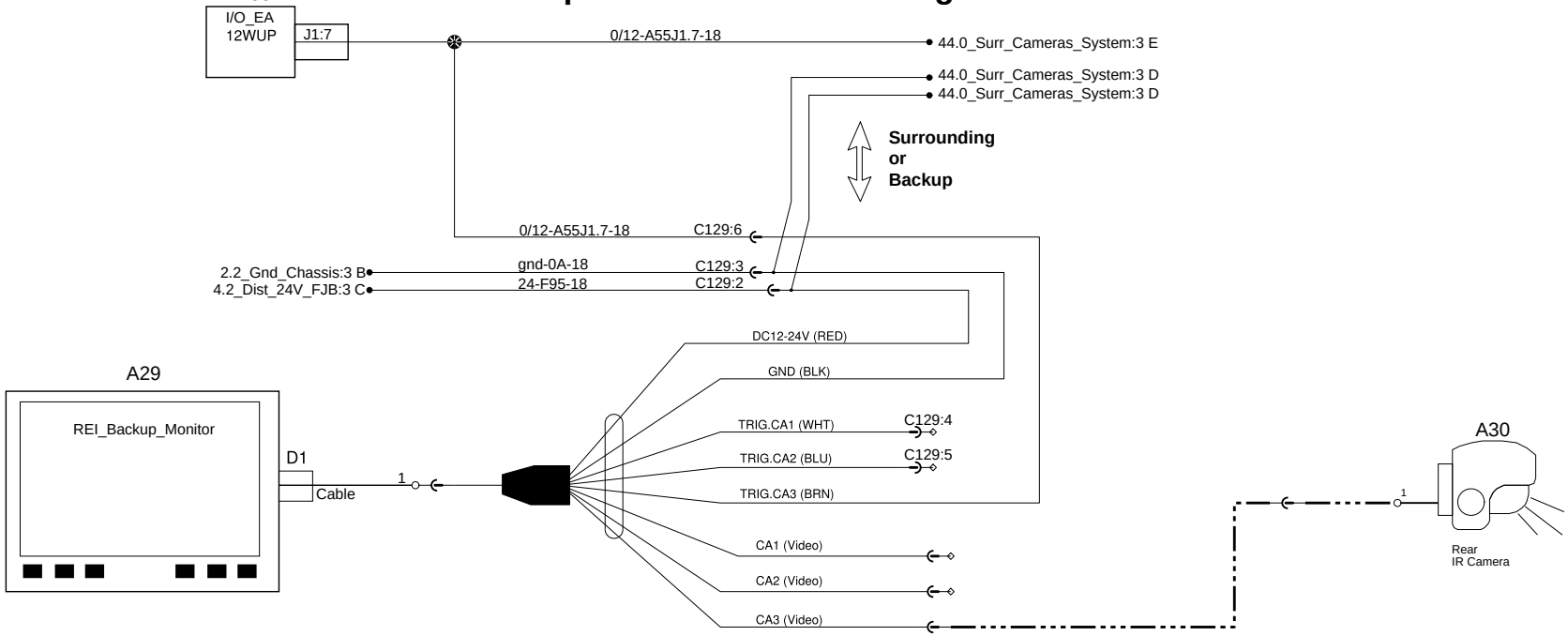

Electronic destination signs

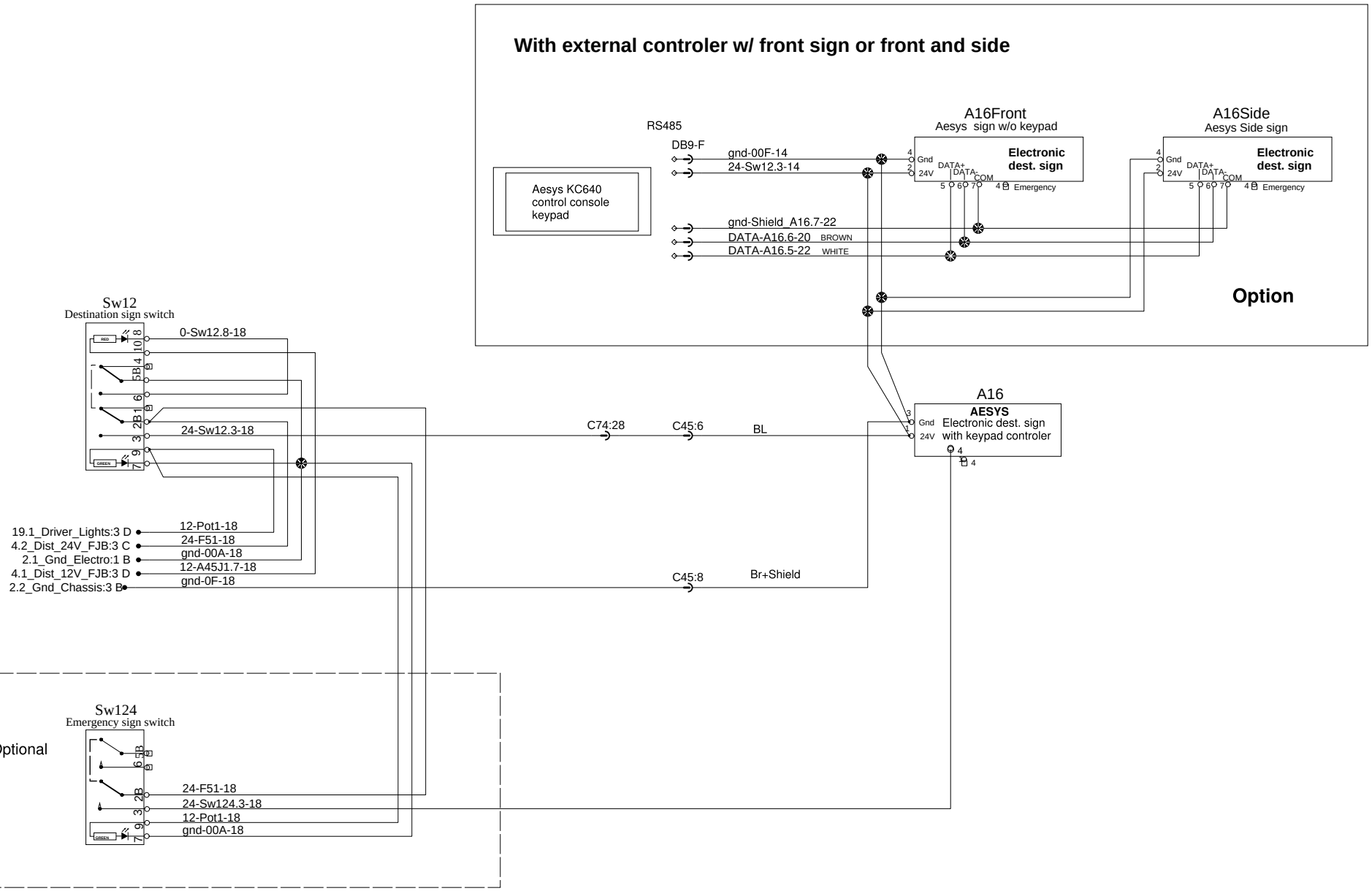

PREVOST®	WIRING DIAGRAM	No:D061640	Page:28.2	Rev:0

Electronic destination signs

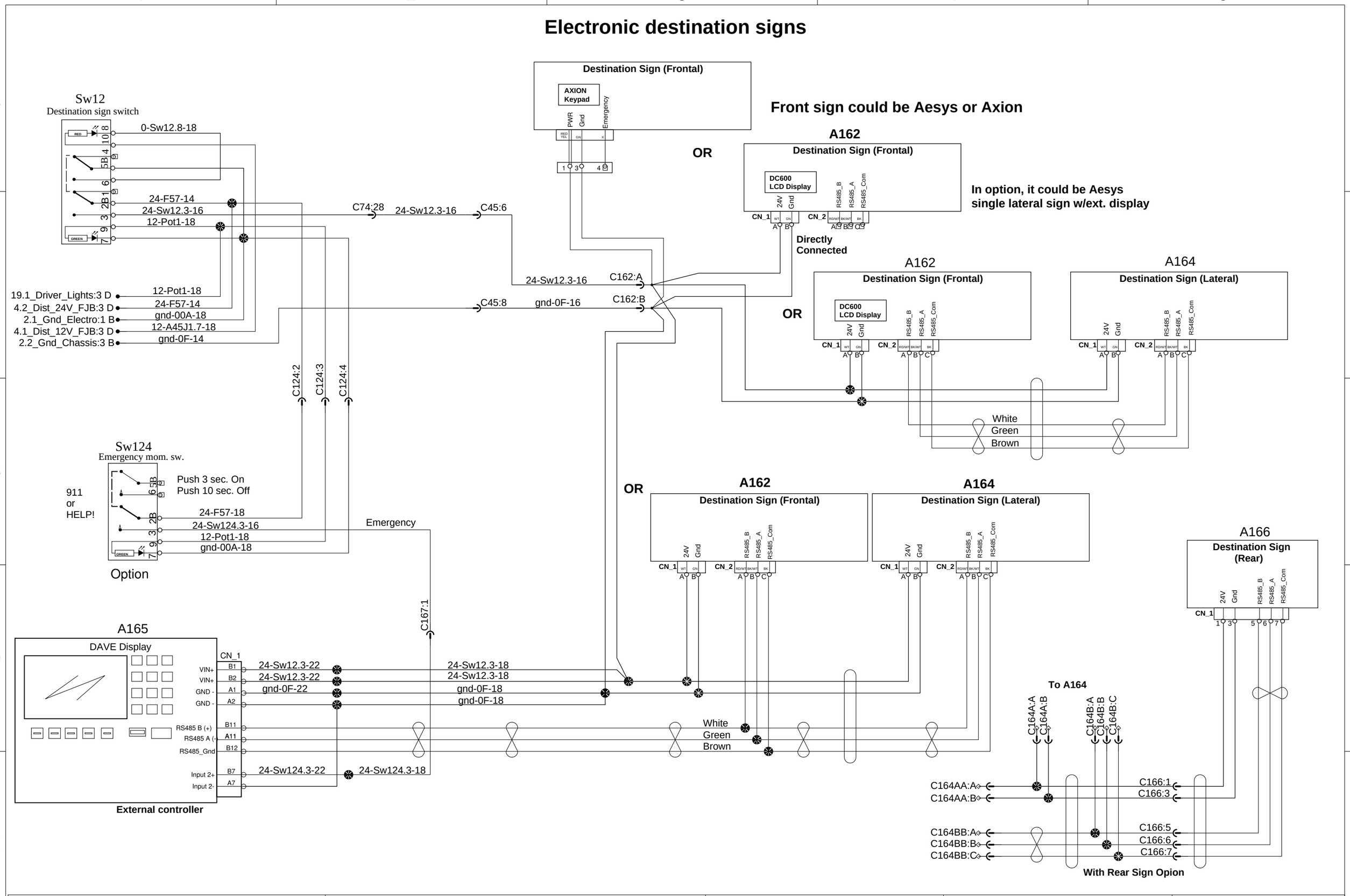

PREVOST®	WIRING DIAGRAM	No:D061640	Page:28.2	Rev:11

Electronic destination signs

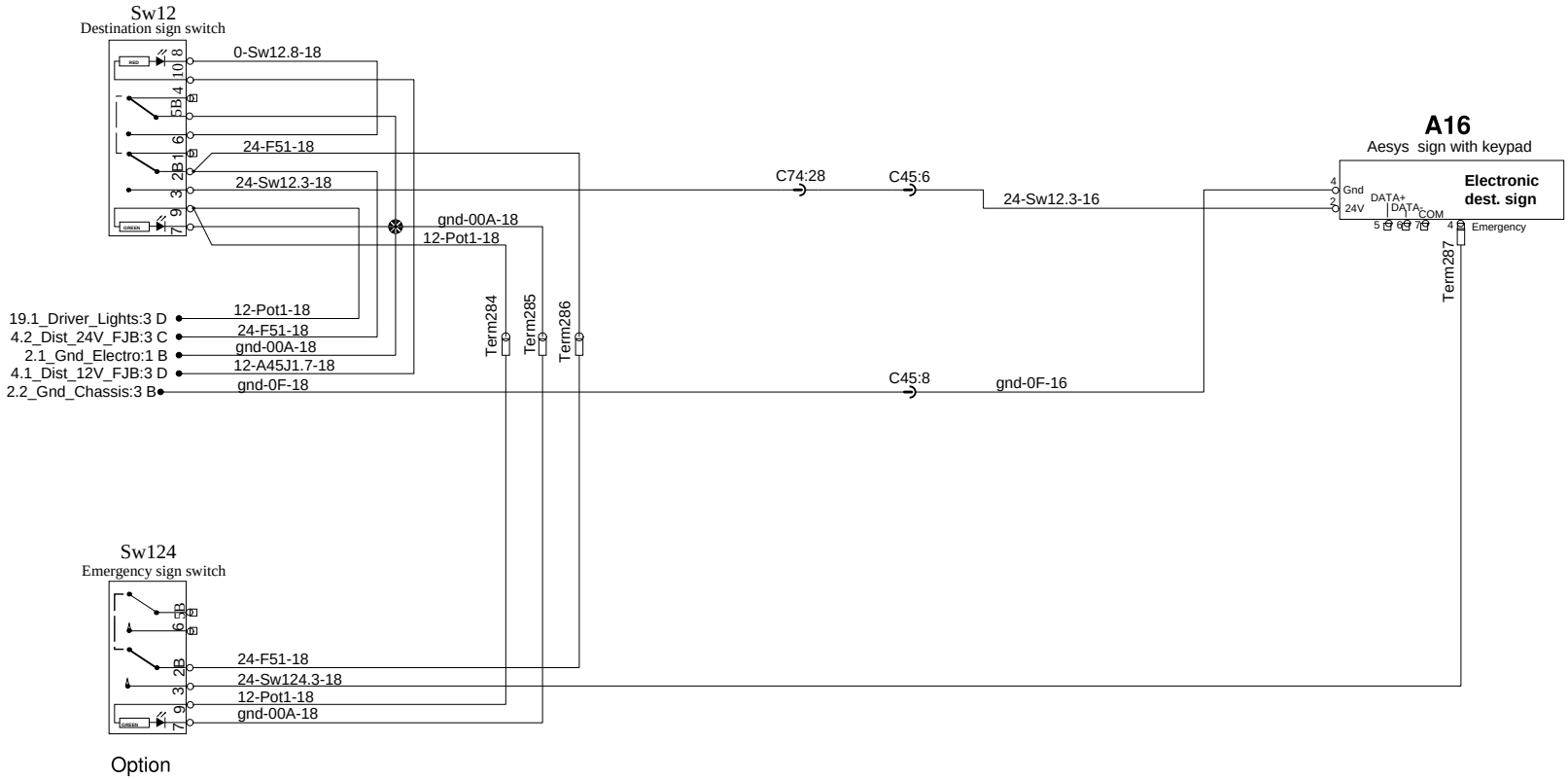

Entrance door

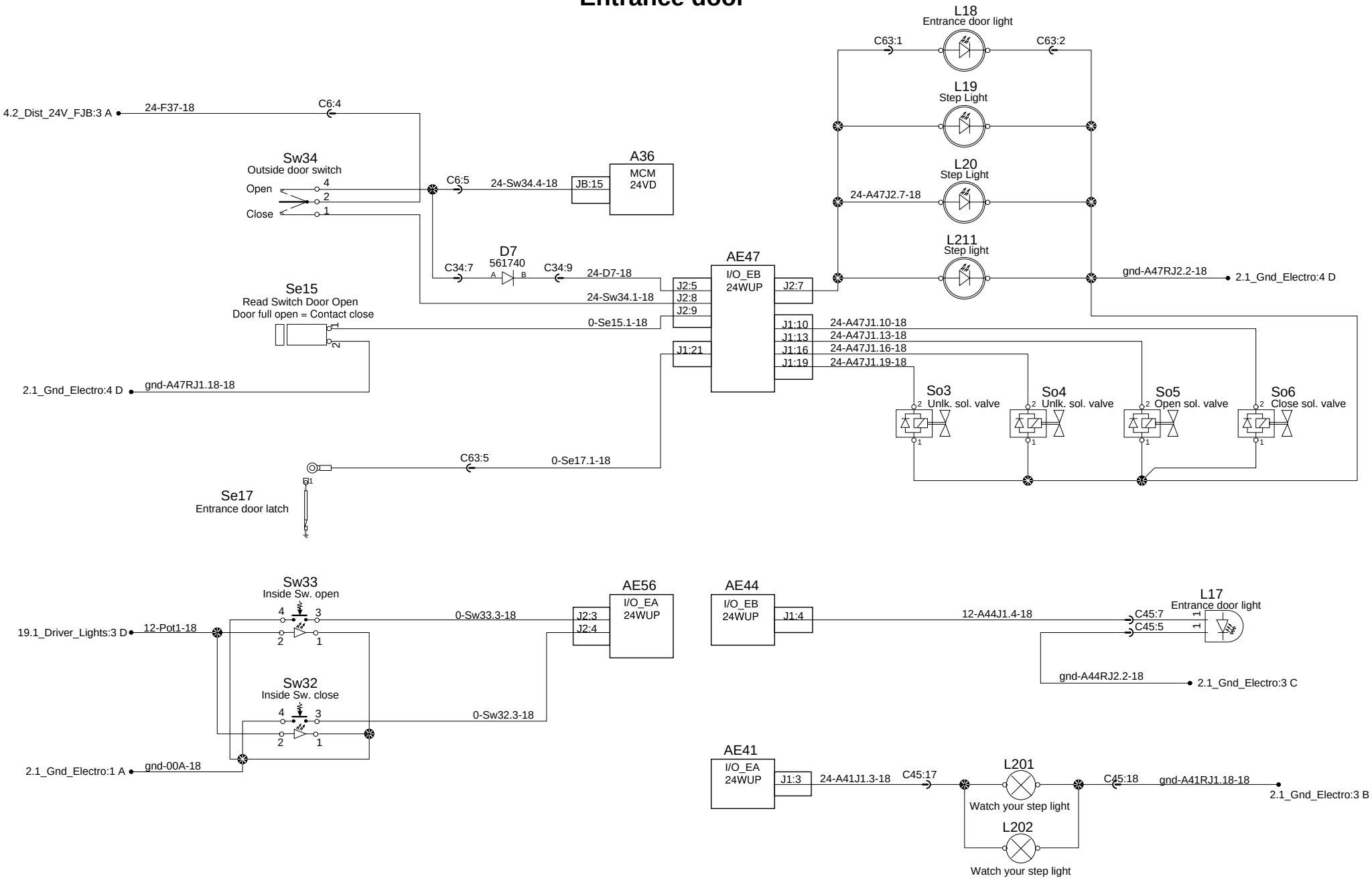

PREVOST®	WIRING DIAGRAM	No:D061640	Page:29.1	Rev:0

Driver Window

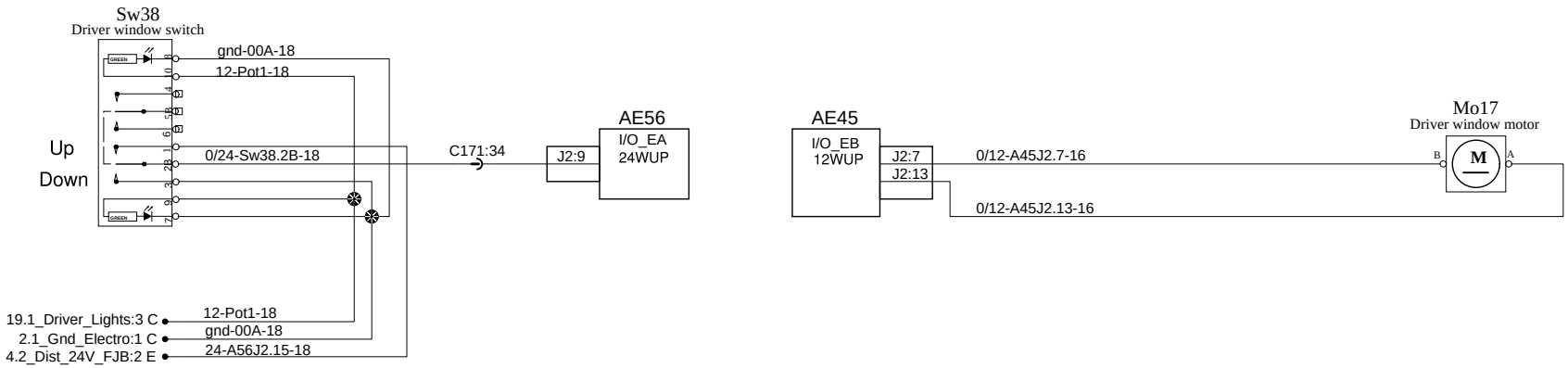

12V Outlets

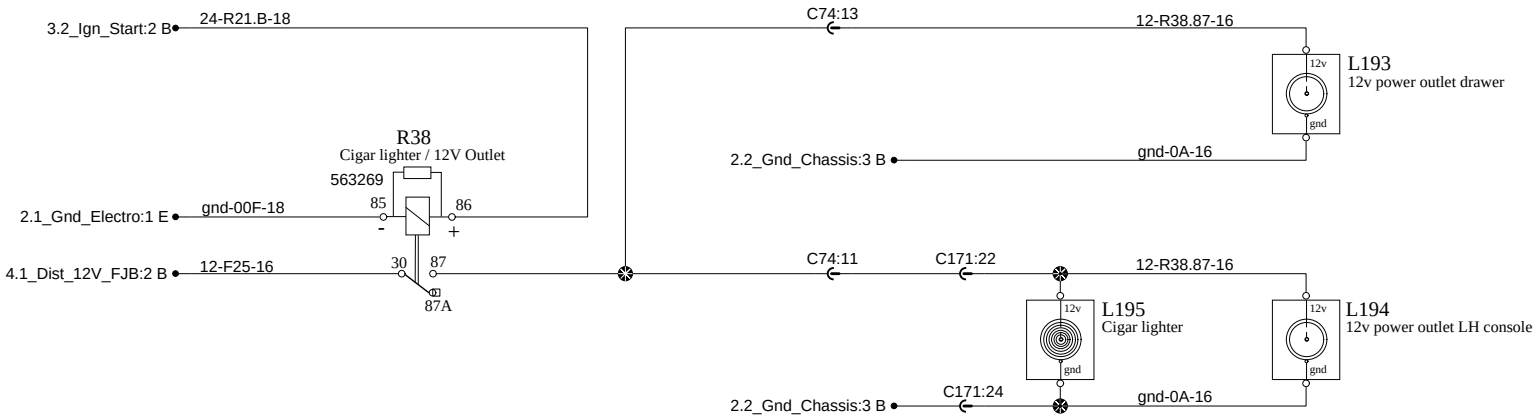
3.2_Ign_Start:2 B
24-R21.B-18
R38
Cigar lighter / 12V Outlet
563269
2.1_Gnd_Electro:1 E
gnd-00F-18
85
86
-
+
4.1_Dist_12V_FJB:2 B
12-F25-16
30
87
87A
C74:13
12-R38.87-16
L193
12v power outlet drawer
12v
gnd
2.2_Gnd_Chassis:3 B
gnd-0A-16
C74:11
C171:22
12-R38.87-16
L195
Cigar lighter
L194
12v power outlet LH console
C171:24
2.2_Gnd_Chassis:3 B
gnd-0A-16

12V Outlets Separated

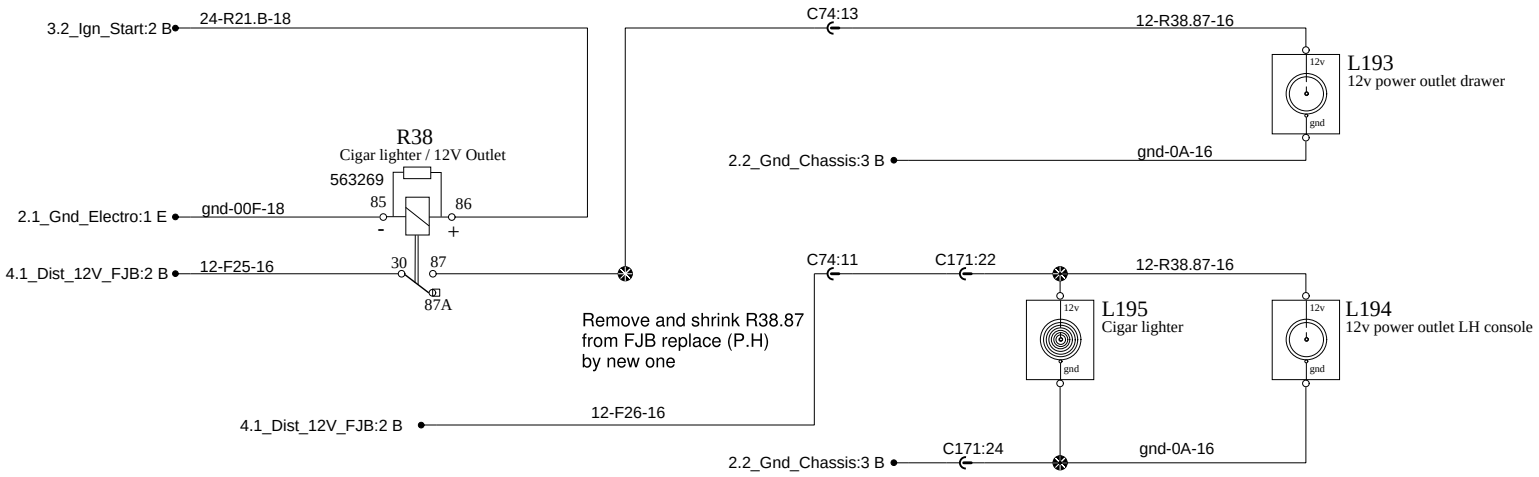

PREVOST®	WIRING DIAGRAM	No:D061640	Page:30.2 SP2	Rev:0

USB Dual Port Outlets

Customer Adaptation

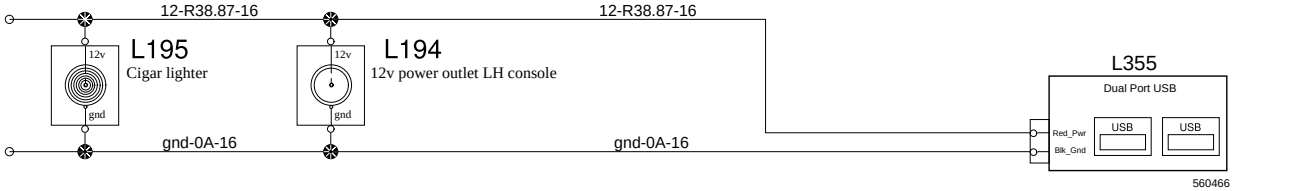

Located on the LH Console

Driver seat with heating function

Customer Adaptation

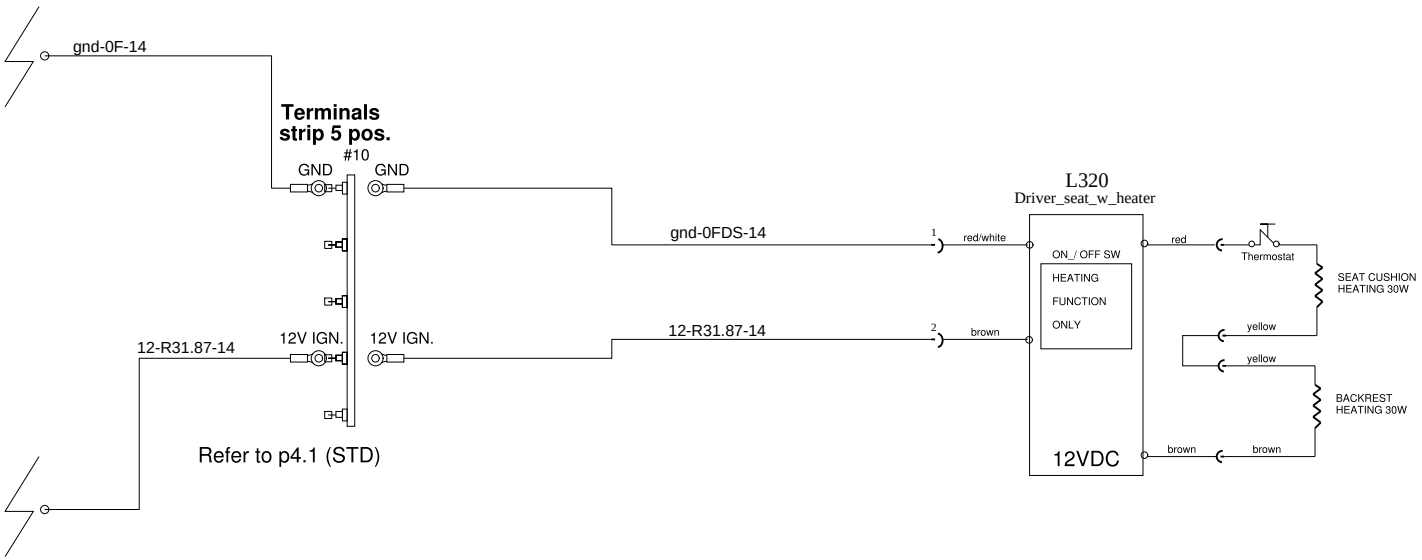

PREVOST®	WIRING DIAGRAM	No:D061640	Page:30.3 SP1	Rev:00

Mirrors, 2 adjustments switch and heated

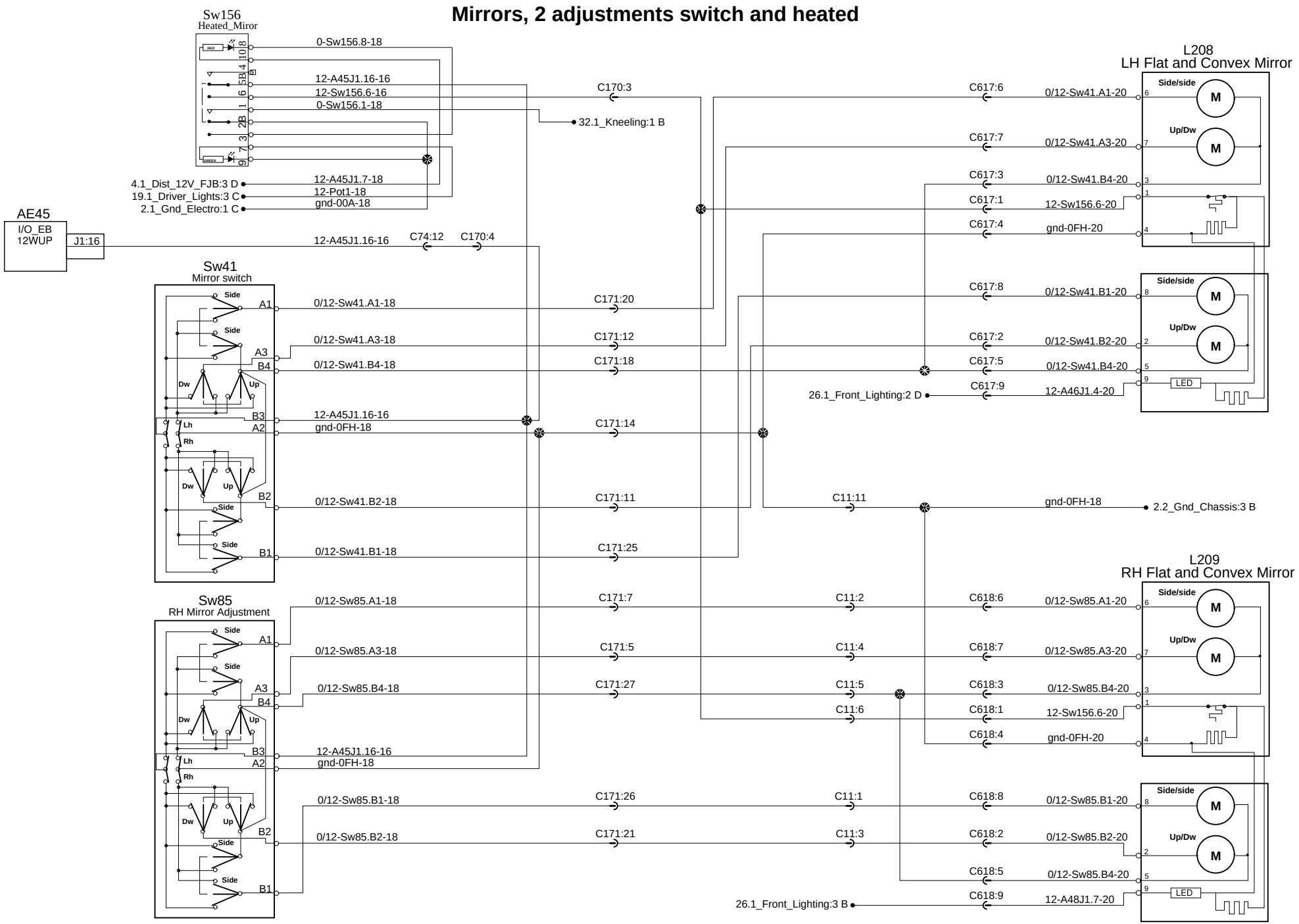

PREVOST®	WIRING DIAGRAM	No:D061640	Page:31.1	Rev:0

Electronic Mirrors (eMirrors)

Info: Mirrors remains ON about 2 minutes after Ignition key turn OFF

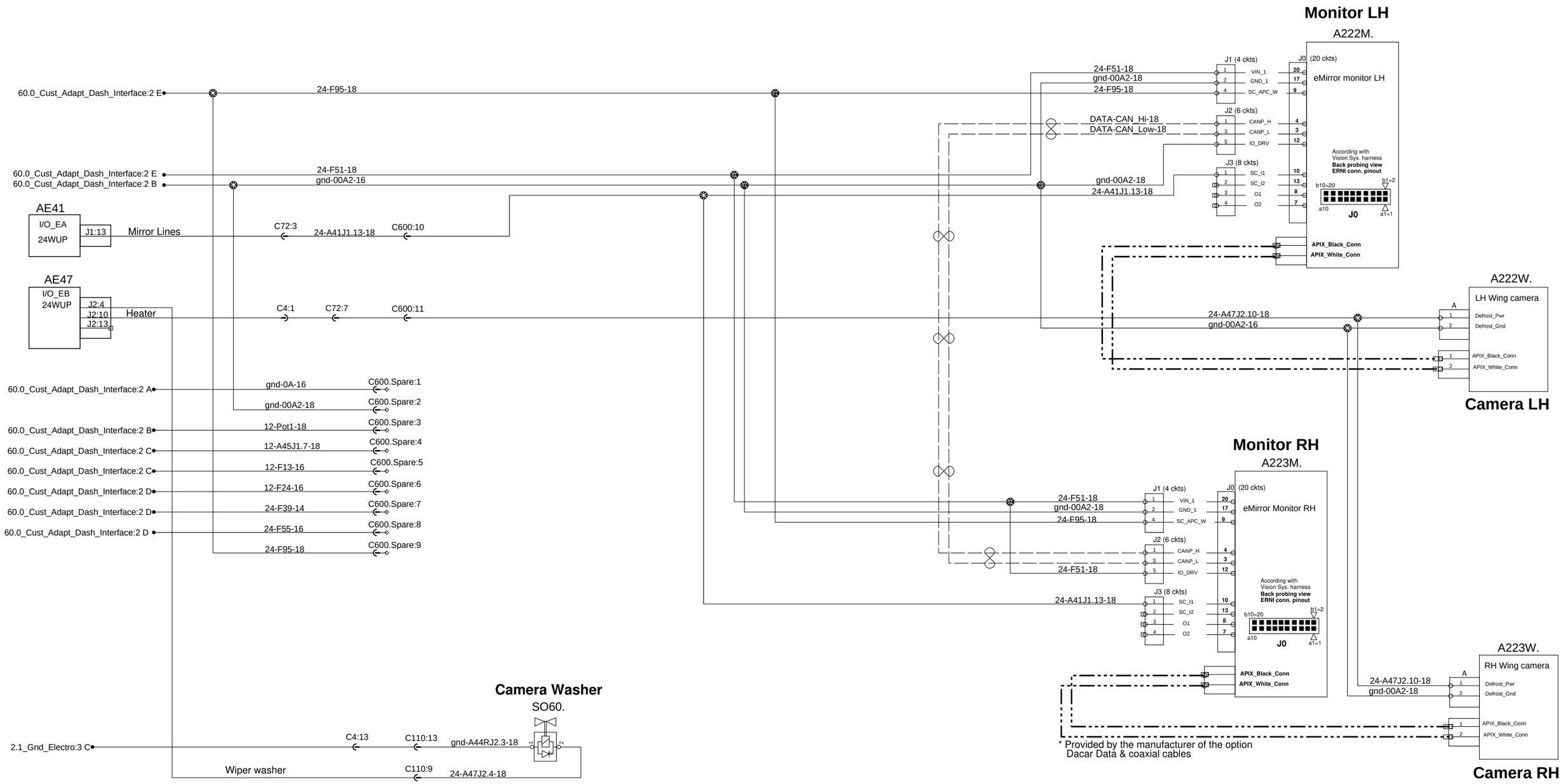

PREVOST®	WIRING DIAGRAM	No:D061640	Page:31.2	Rev:16

Kneeling, tag and low buoy control

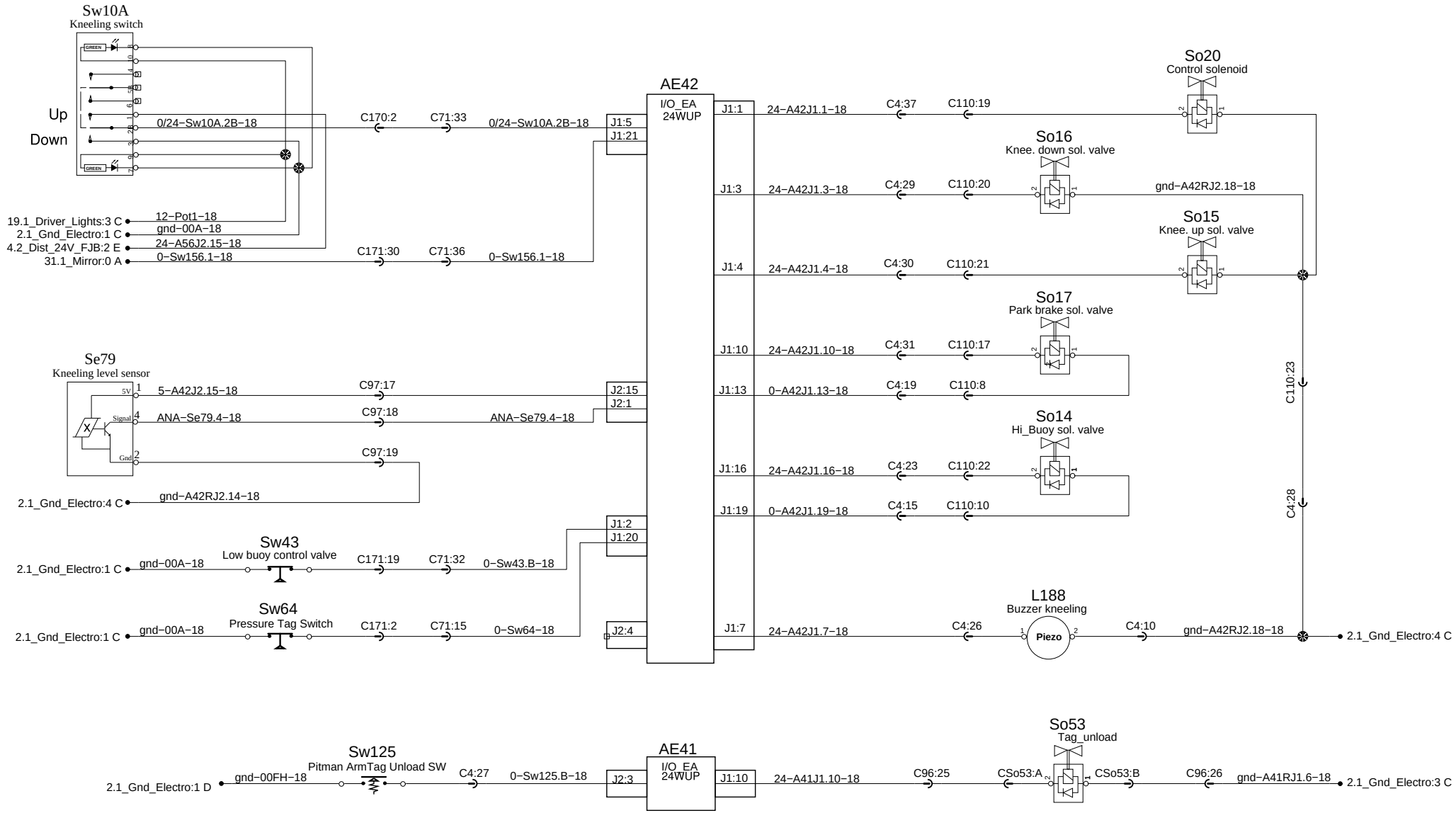

PREVOST®	WIRING DIAGRAM	No:D061640	Page:32.1	Rev:0

Kneeling, tag and low buoy control

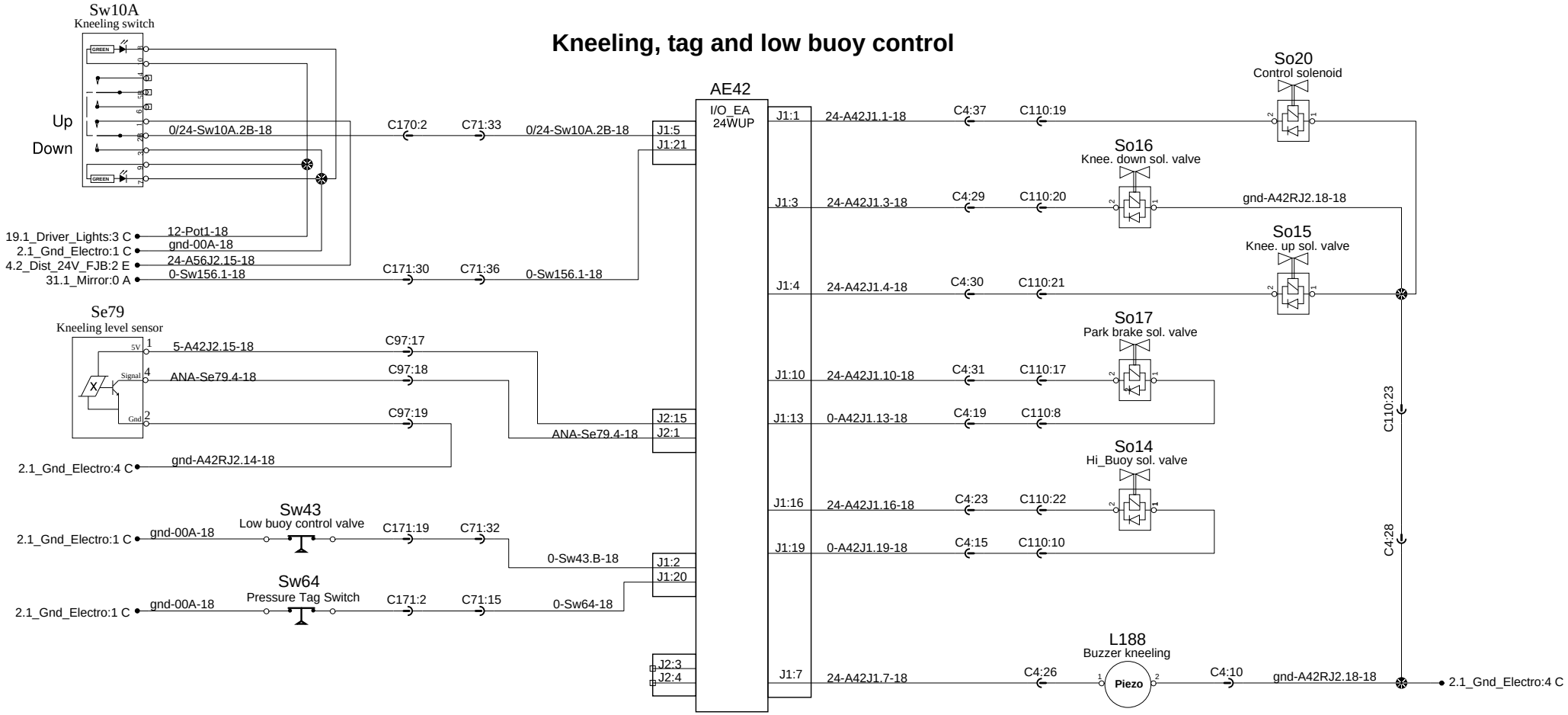

PREVOST®	WIRING DIAGRAM	No:D061640	Page:32.1	Rev:12

Automatic Tag unload

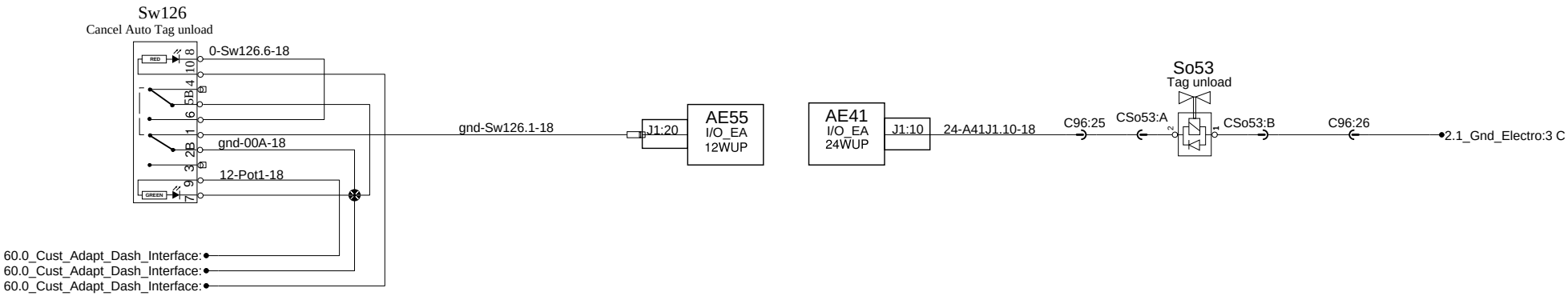

PREVOST®	WIRING DIAGRAM	No:D061640	Page:32.1SP1	Rev:0

Kneeling, tag and low buoy control
Switch added to Cancel Automatic Tag Unload
Customer Adaptation

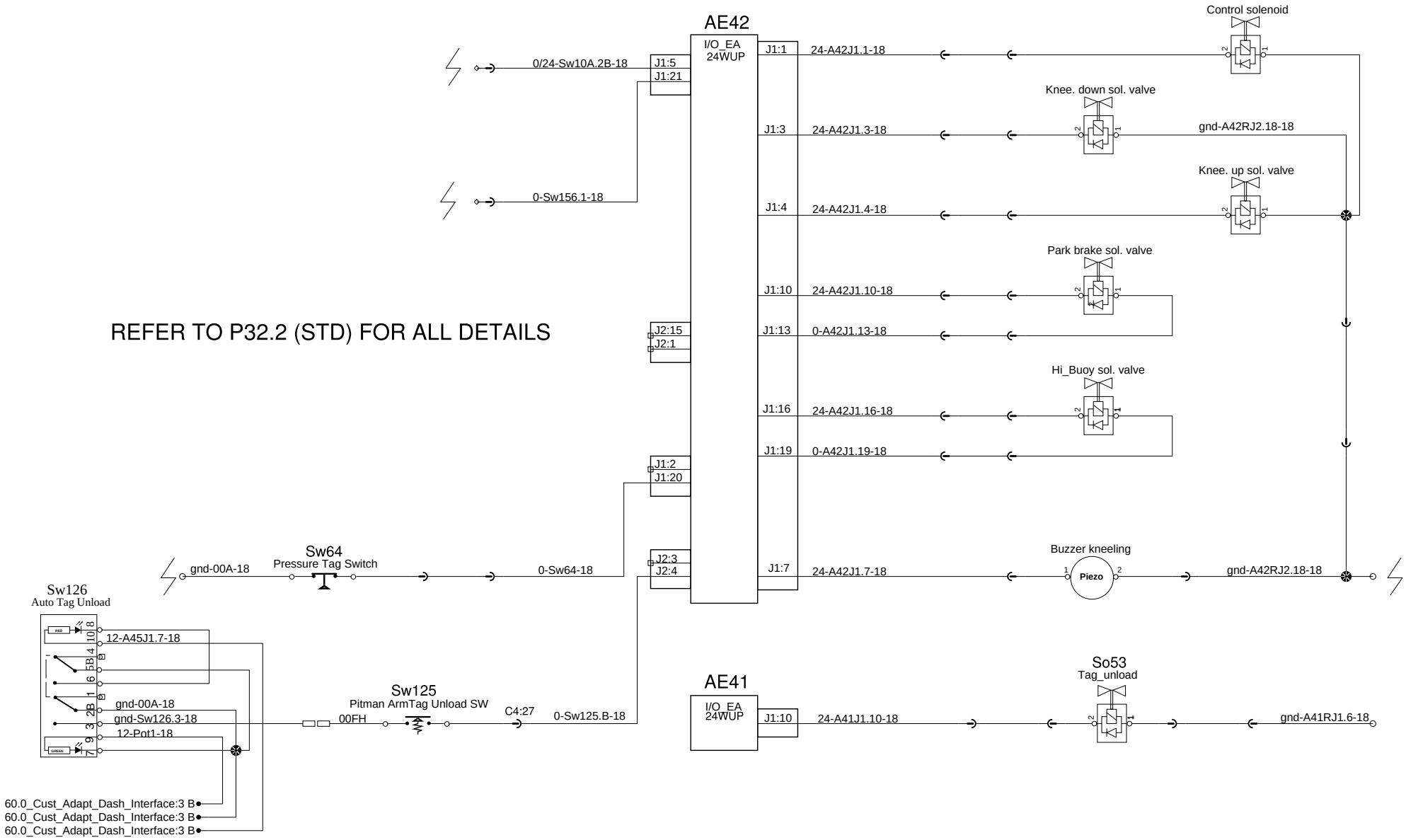

PREVOST®	WIRING DIAGRAM	No:D061640	Page:32.2 SP1	Rev:00

Luggage door Lock/Unlock

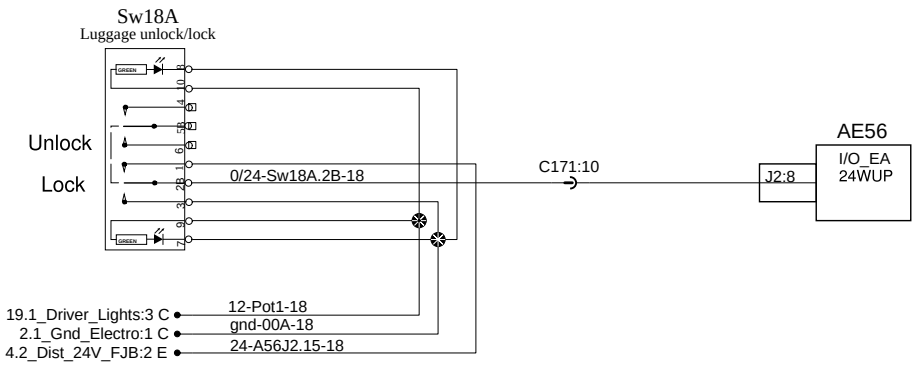

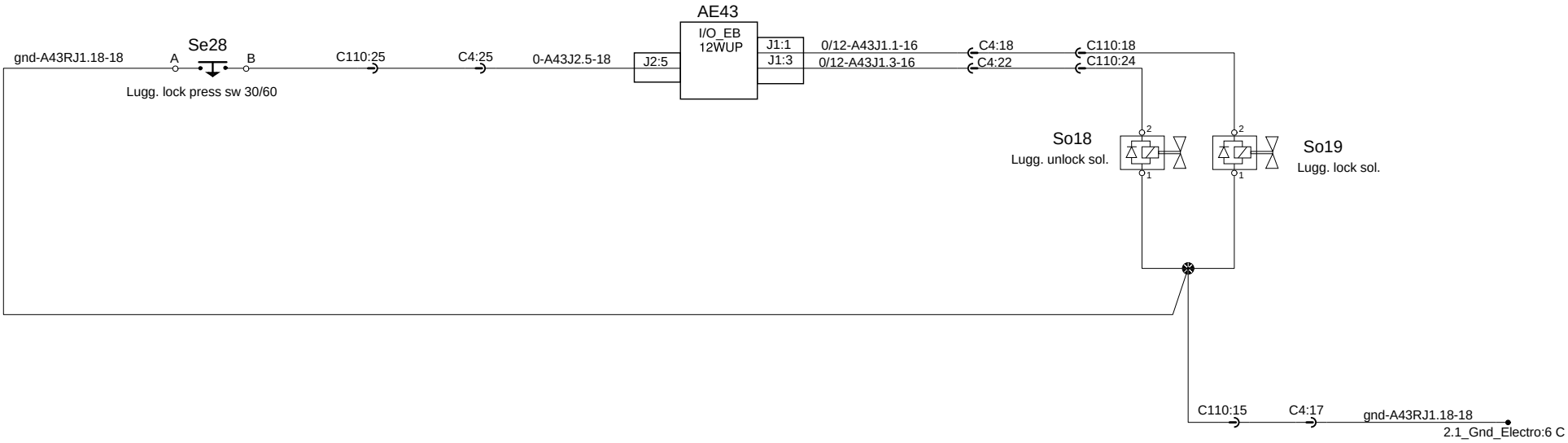

Wipers and washer

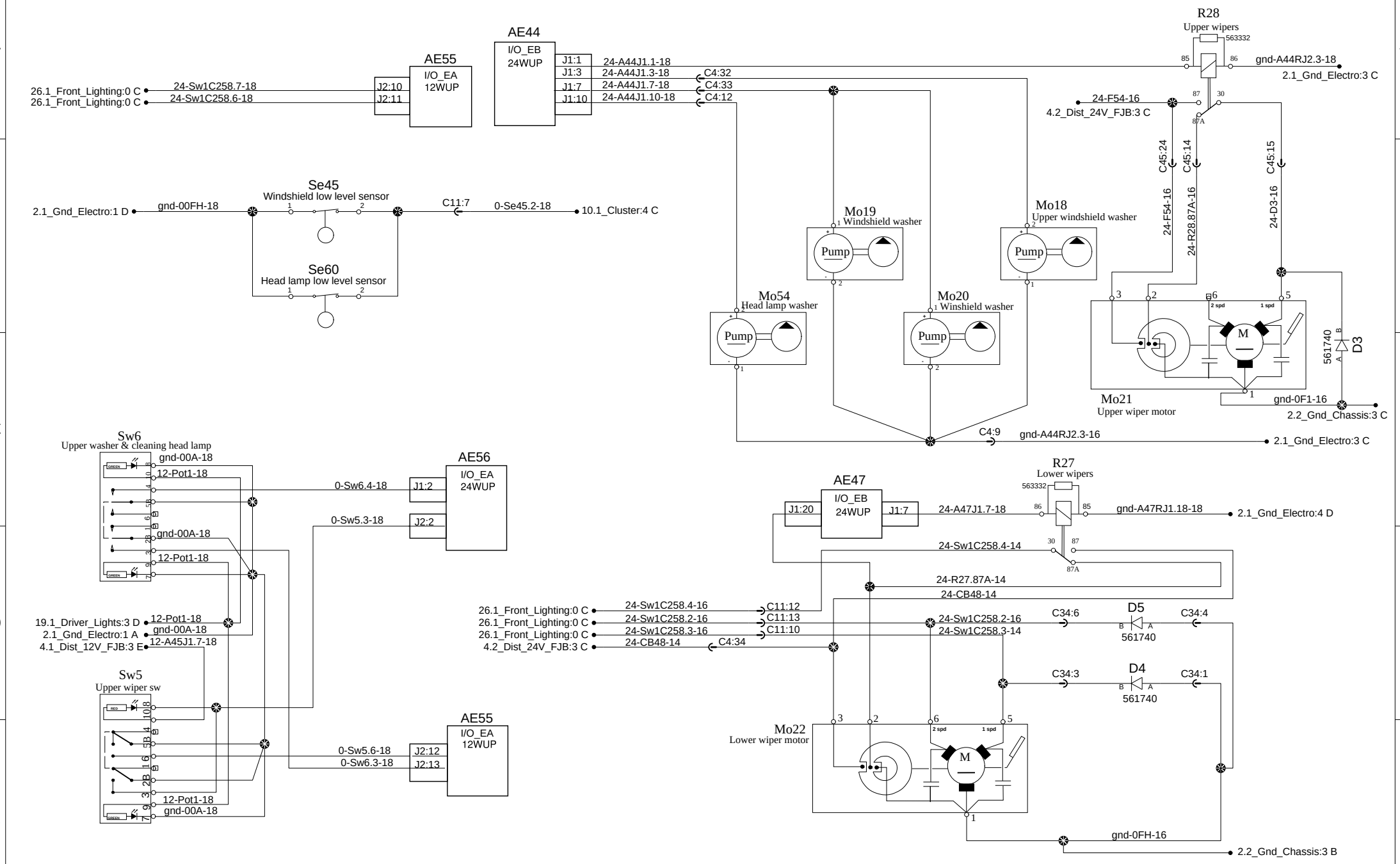

PREVOST®	WIRING DIAGRAM	No:D061640	Page:34.1	Rev:0

Wipers and washer

Customer Adaptation Intermittent controler added

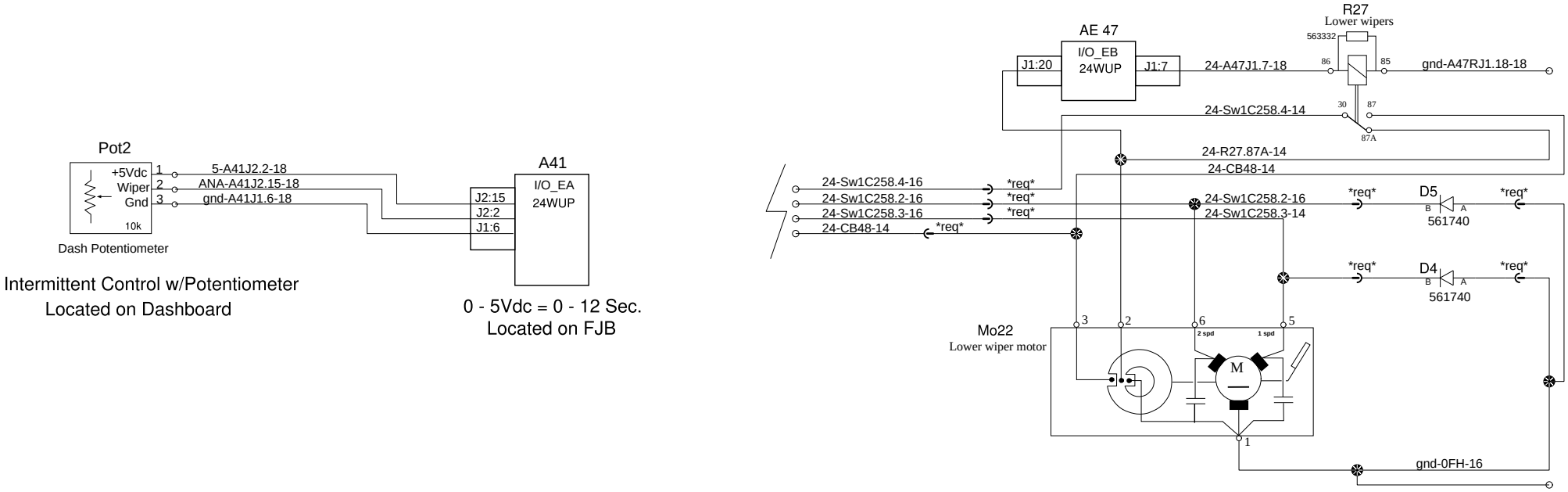

Intermittent Control w/Potentiometer
Located on Dashboard

0 - 5Vdc = 0 - 12 Sec.
Located on FJB

PREVOST®	WIRING DIAGRAM	No:D061640	Page:34.1 SP1	Rev:00

Speakers arrangement (Delta configuration)

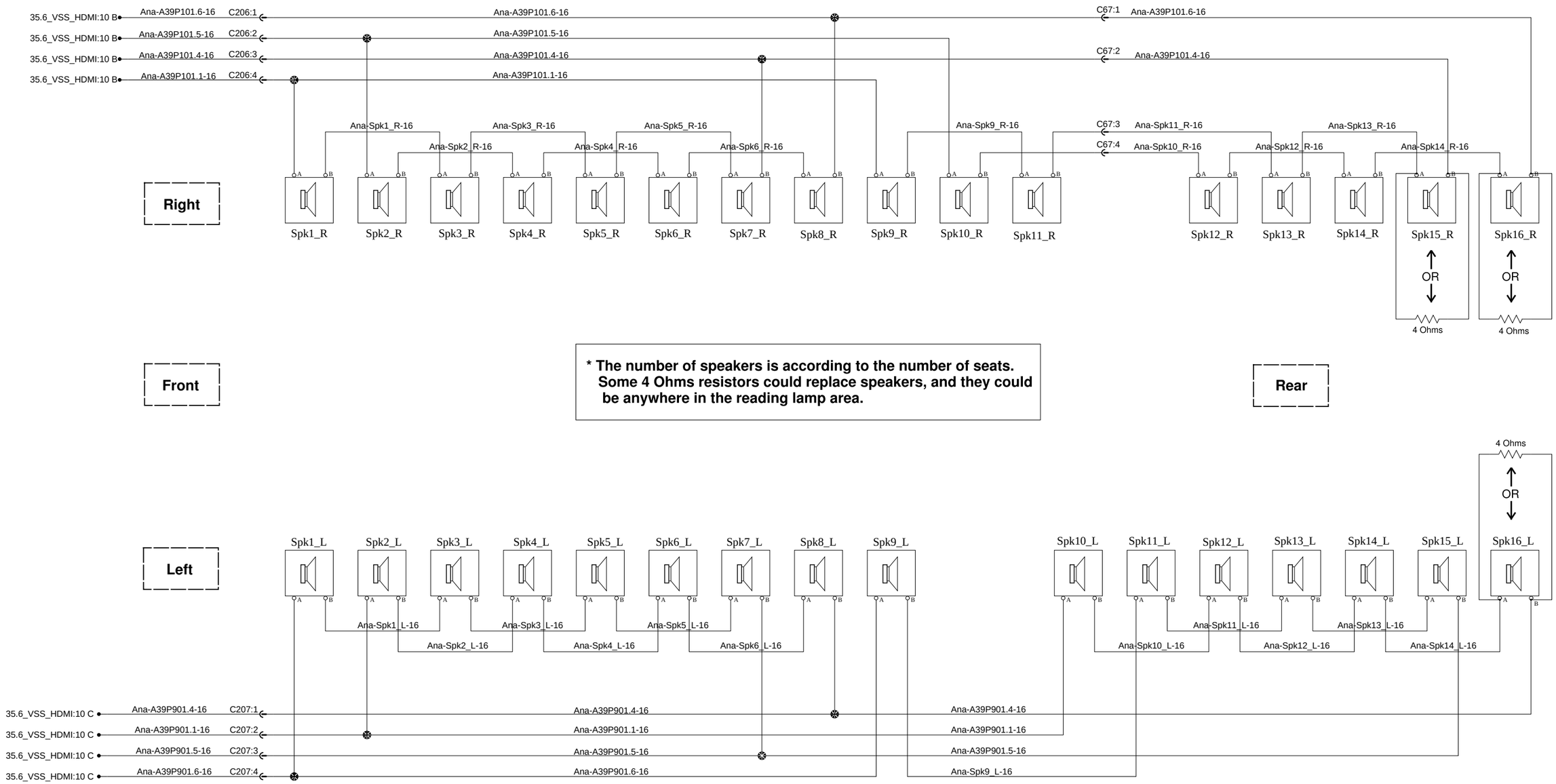

*** The number of speakers is according to the number of seats. Some 4 Ohms resistors could replace speakers, and they could be anywhere in the reading lamp area.**

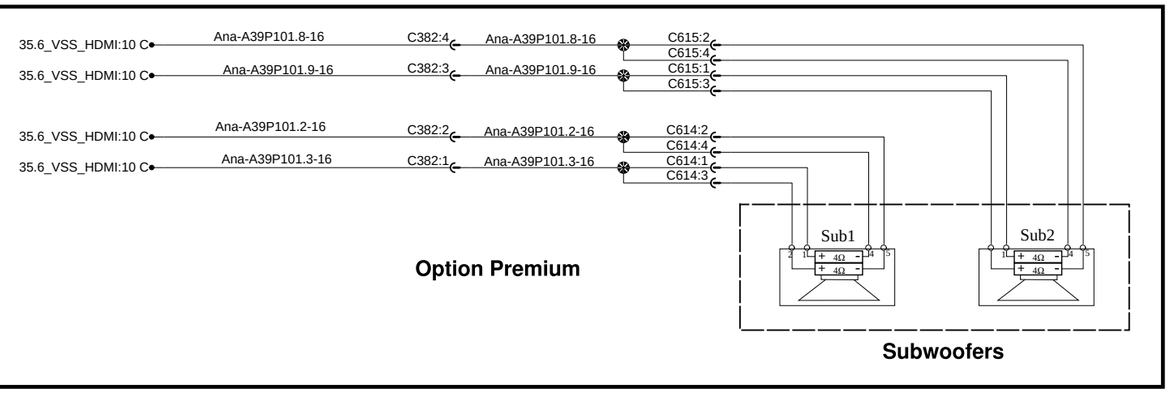

Rev:0

Page:35.2

No:D061640

WIRING DIAGRAM

PREVOST®

Video distribution HDMI

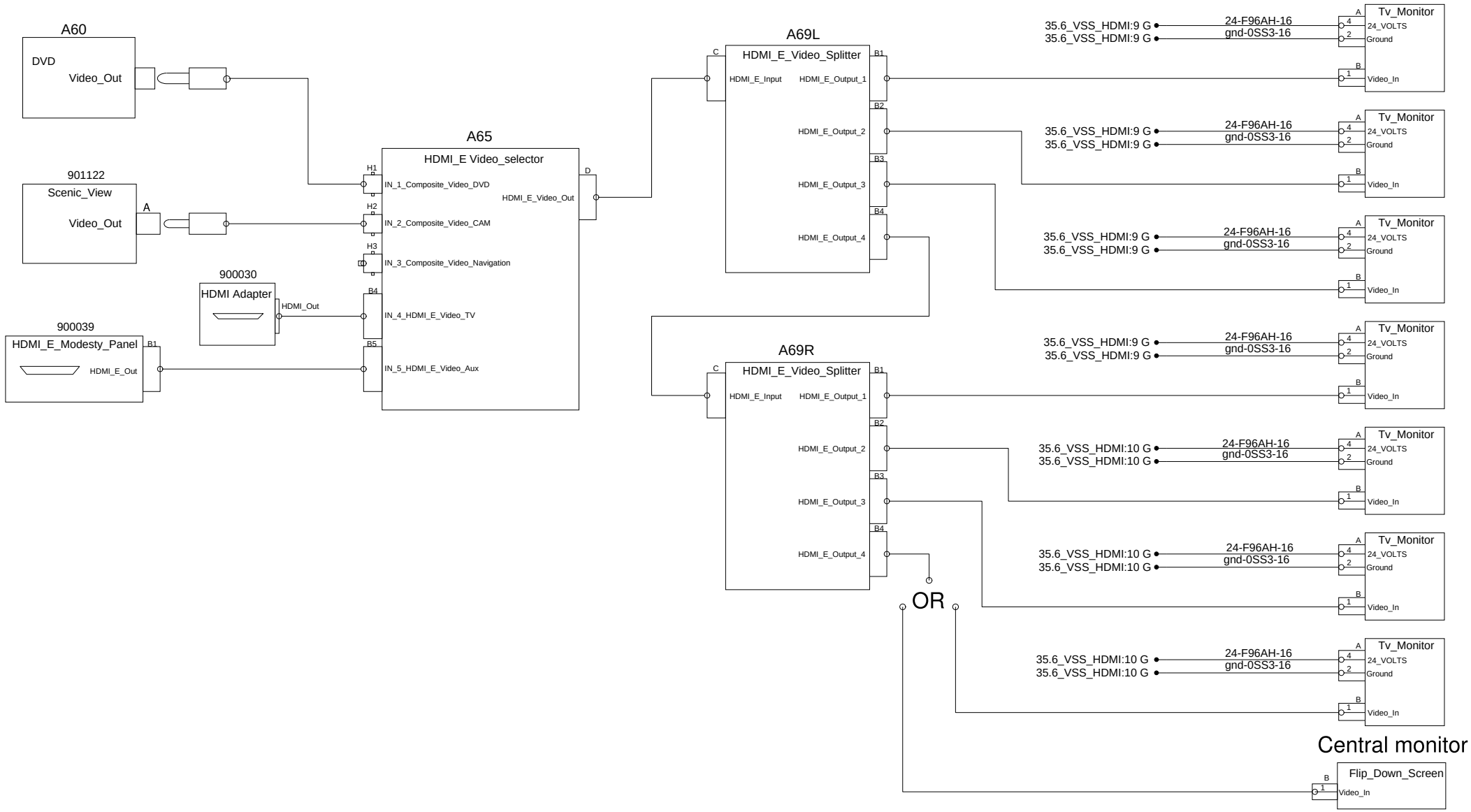

PREVOST®	WIRING DIAGRAM	No:D061640	Page:35.3	Rev:0

Video distribution HDMI

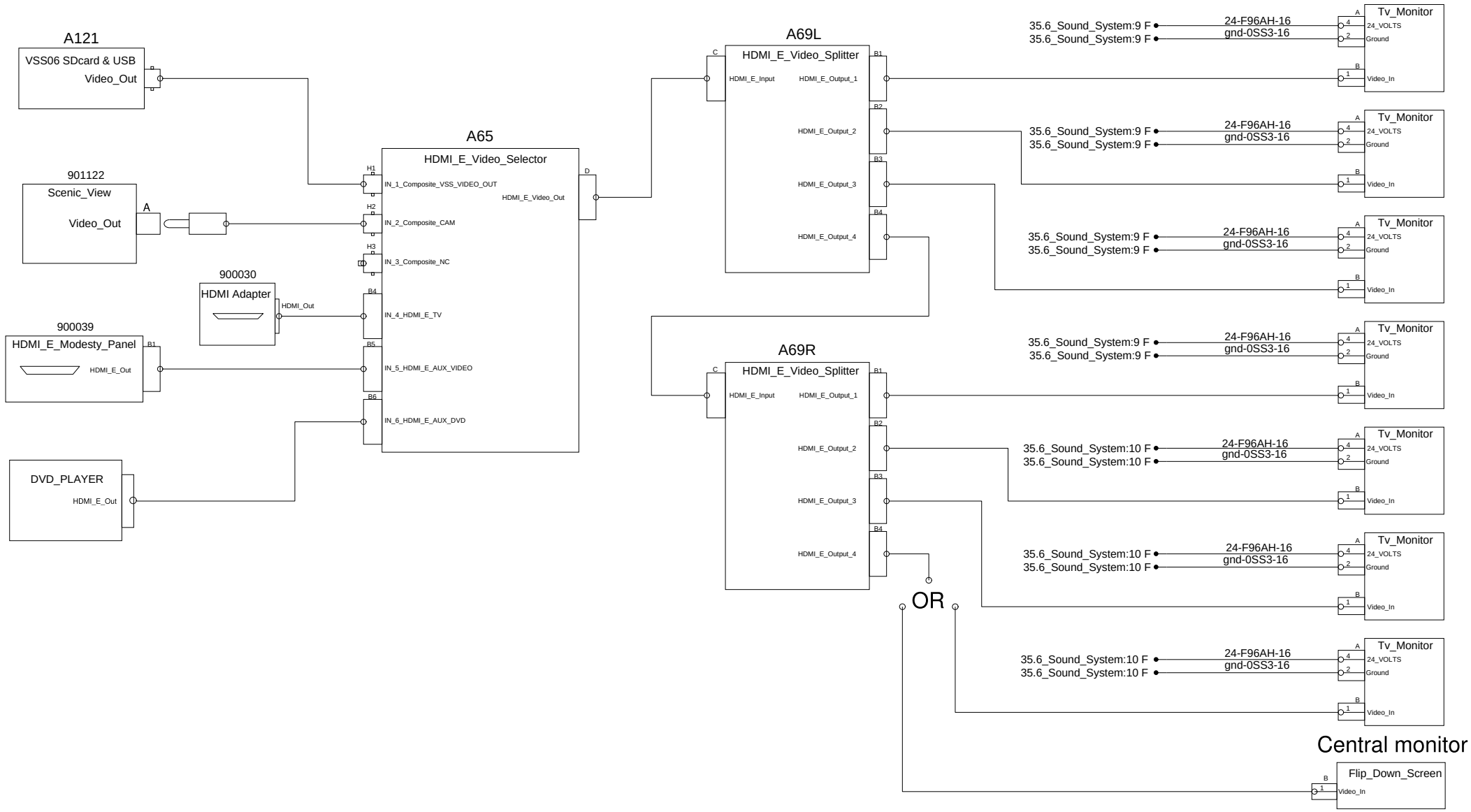

PREVOST®	WIRING DIAGRAM	No:D061640	Page:35.3	Rev:19

Video System Dual HDMI port (one per Modesty Panel)

Customer Adaptation

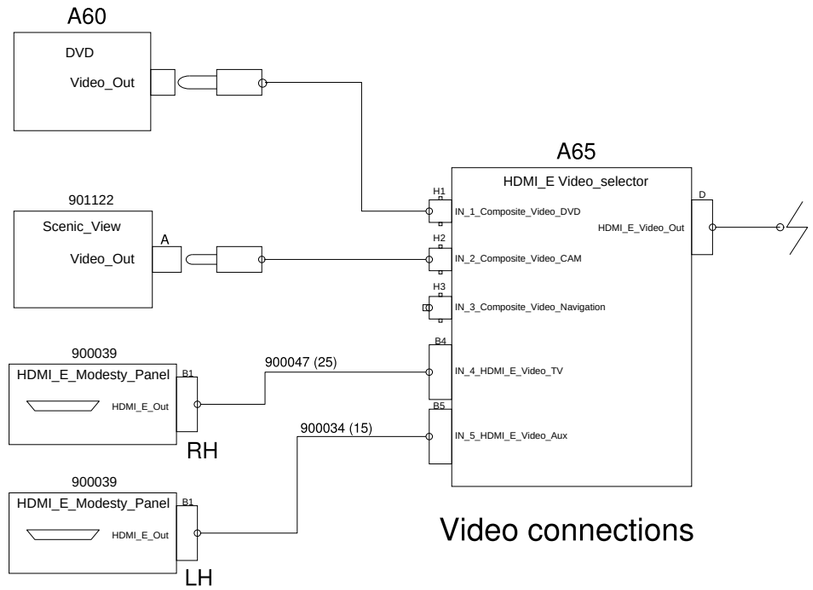

Video connections

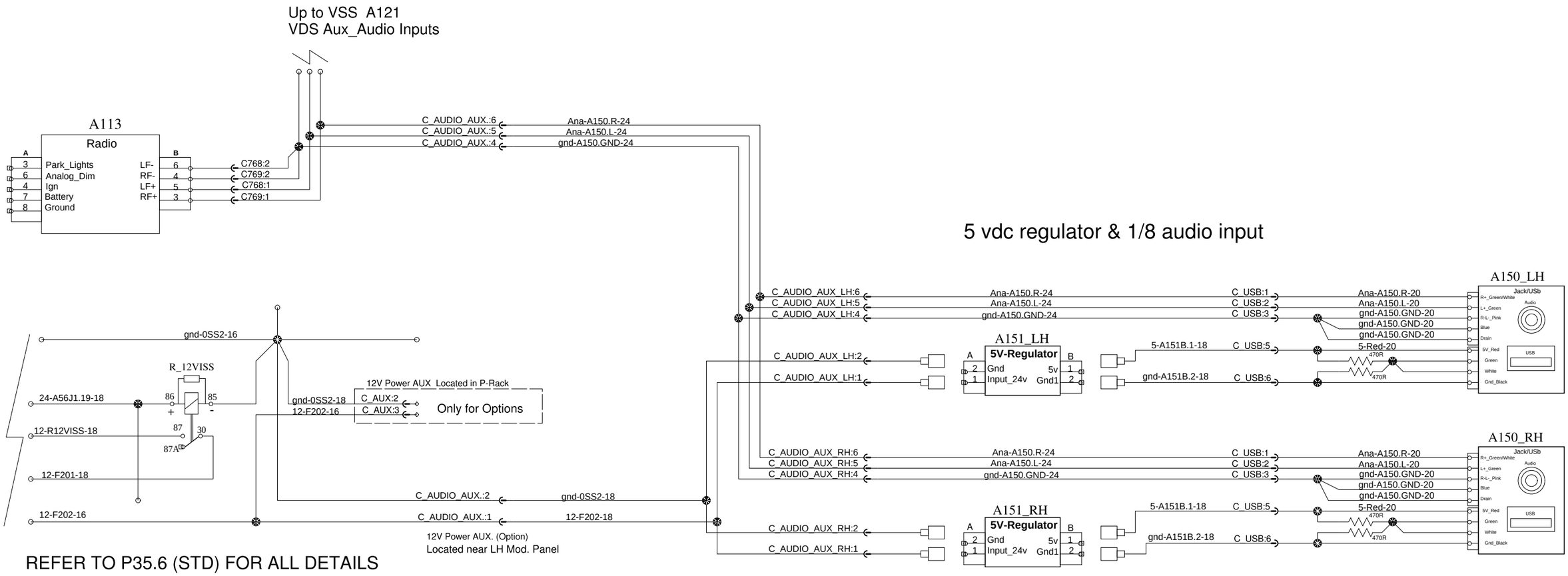

REFER TO P35.6 (STD) FOR ALL DETAILS

PREVOST®	WIRING DIAGRAM	No:D061640	Page:35.3 SP1	Rev:00

VSS HDMI

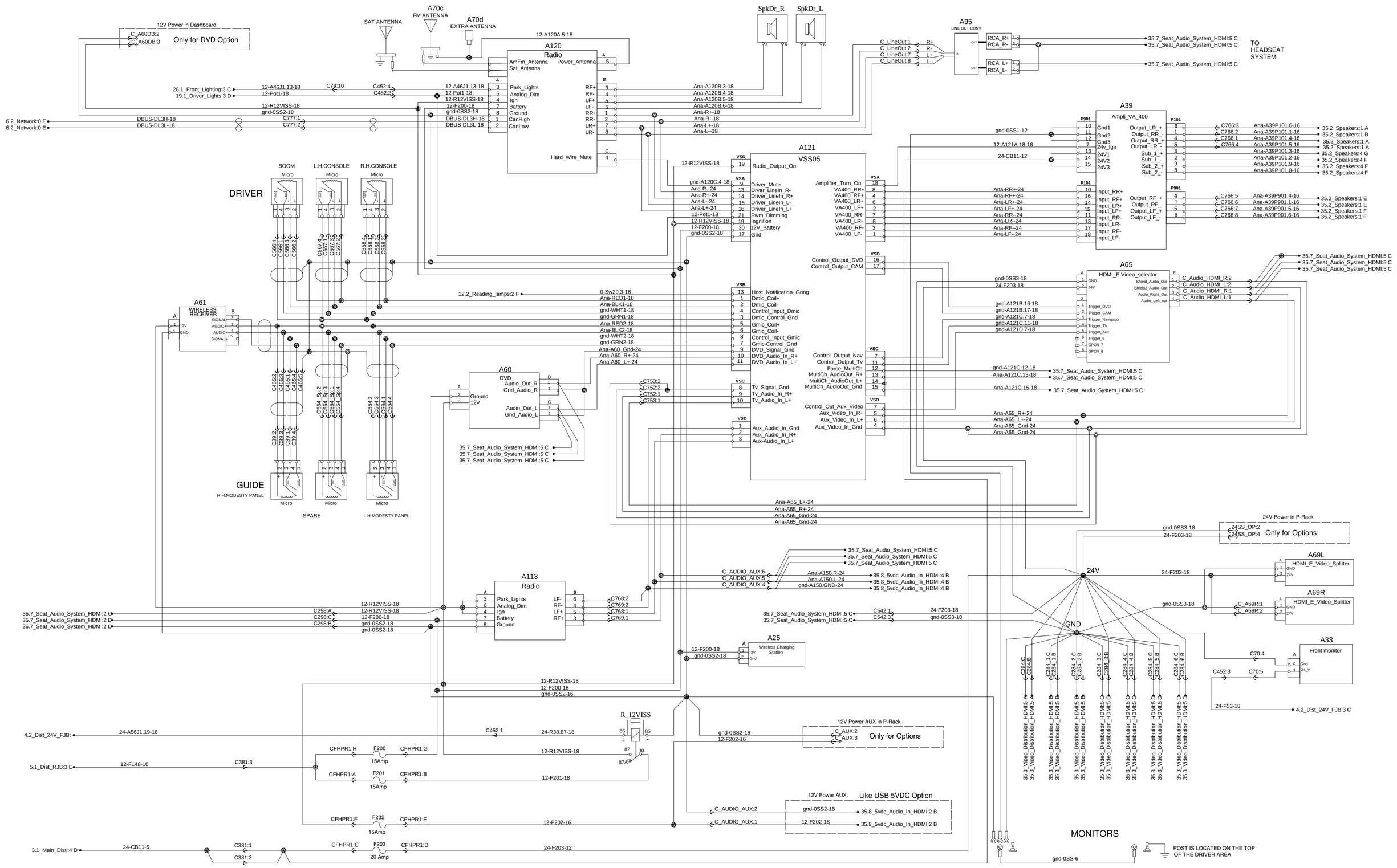

PREVOST®	WIRING DIAGRAM	No:D061640	Page:35.6	Rev:0

Sound System (also called Audio Video System)

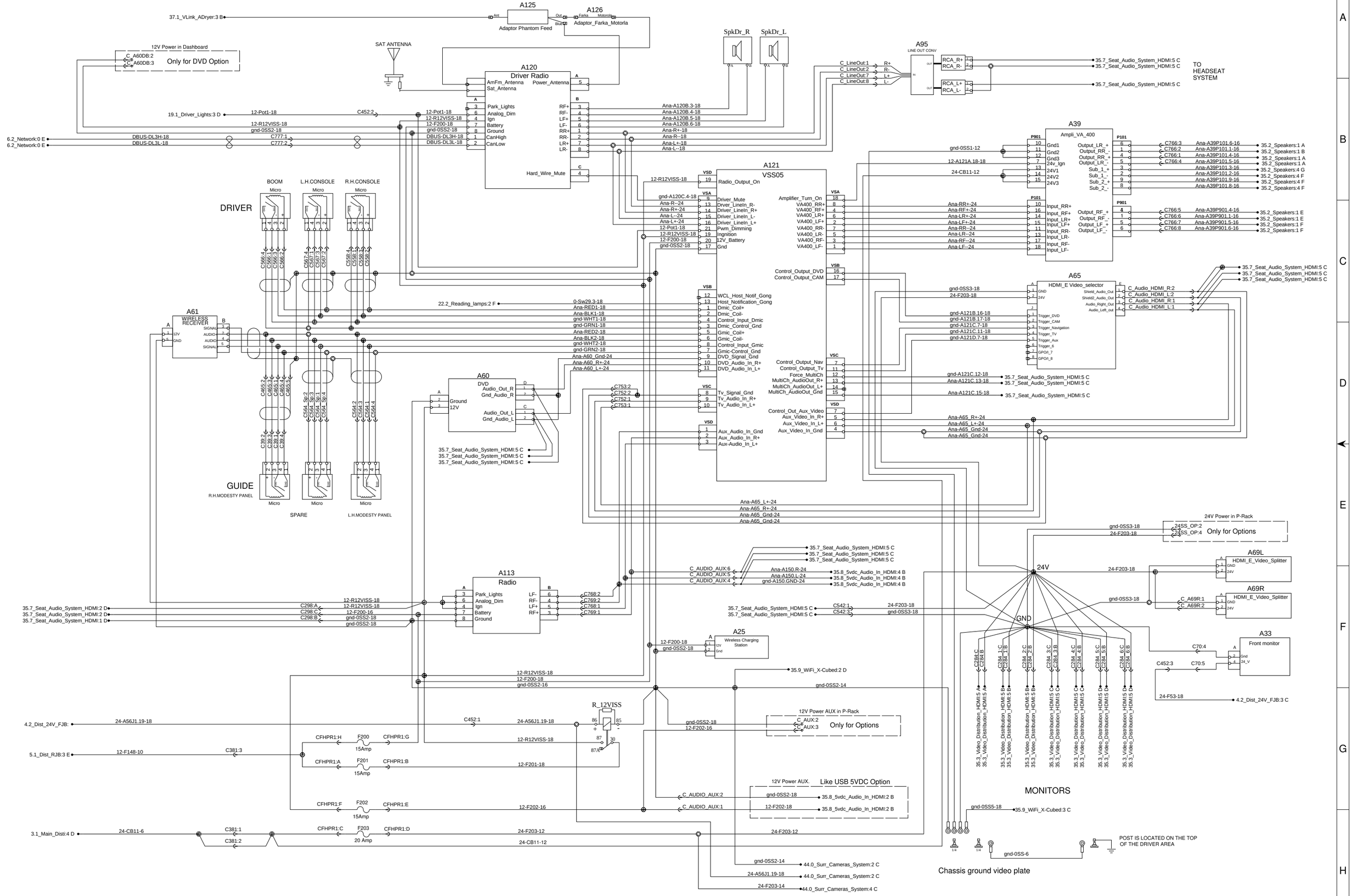

PREVOST® | WIRING DIAGRAM | No:D061640 | Page:35.6 | Rev:11

Sound System (also called Audio Video System)

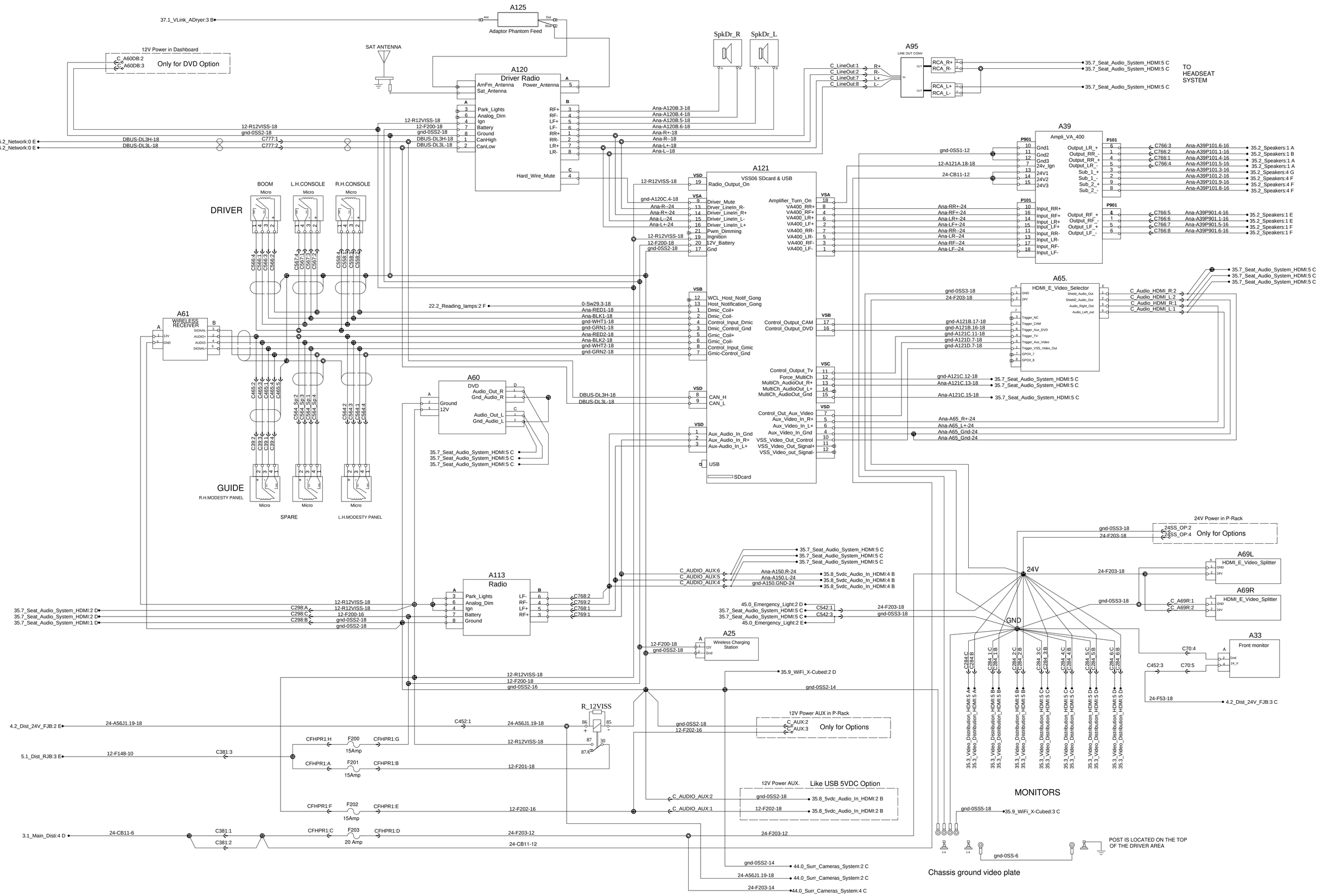

VSS HDMI

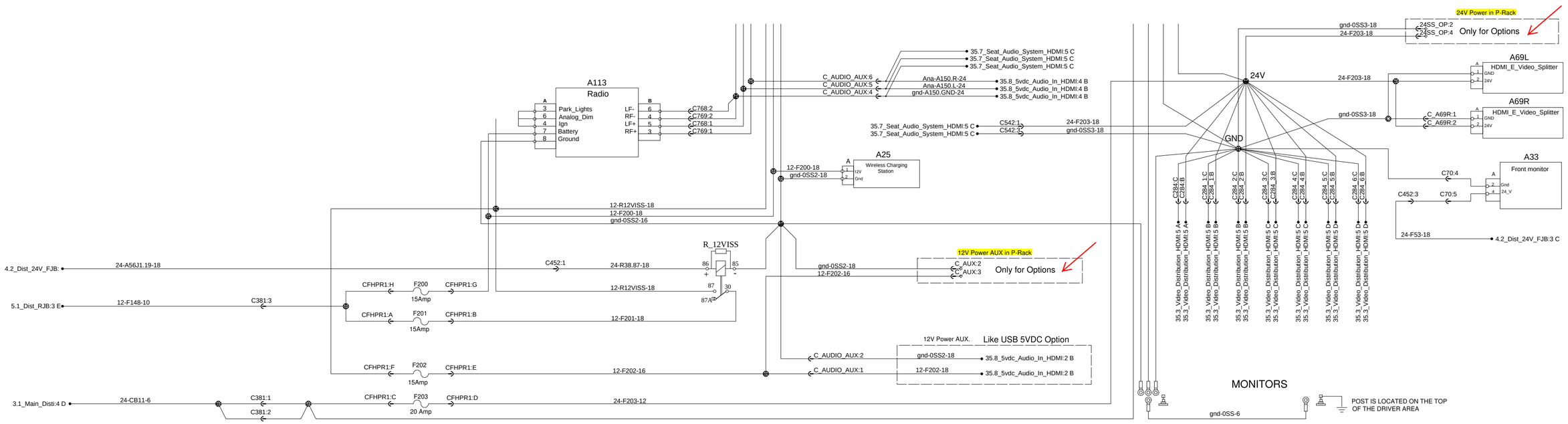

PREVOST®	WIRING DIAGRAM	No:D061640	Page:35.6 SP1	Rev:0

VSS HDMI
Sound and Video Sys Special Schematic
Customer Adaptation change Prw of components

IN SUMMARY
BRIGADE MDR ON 24WUP

ALL COMPONENTS BELOW ON 12VI
BRIGADE 360 ECU
ICOMERA WIFI I
WIRELESS MIC RECEIVER
TRACKVISION CONTROLLER
MP-1000 SAFETY ANNOUNCEMENT

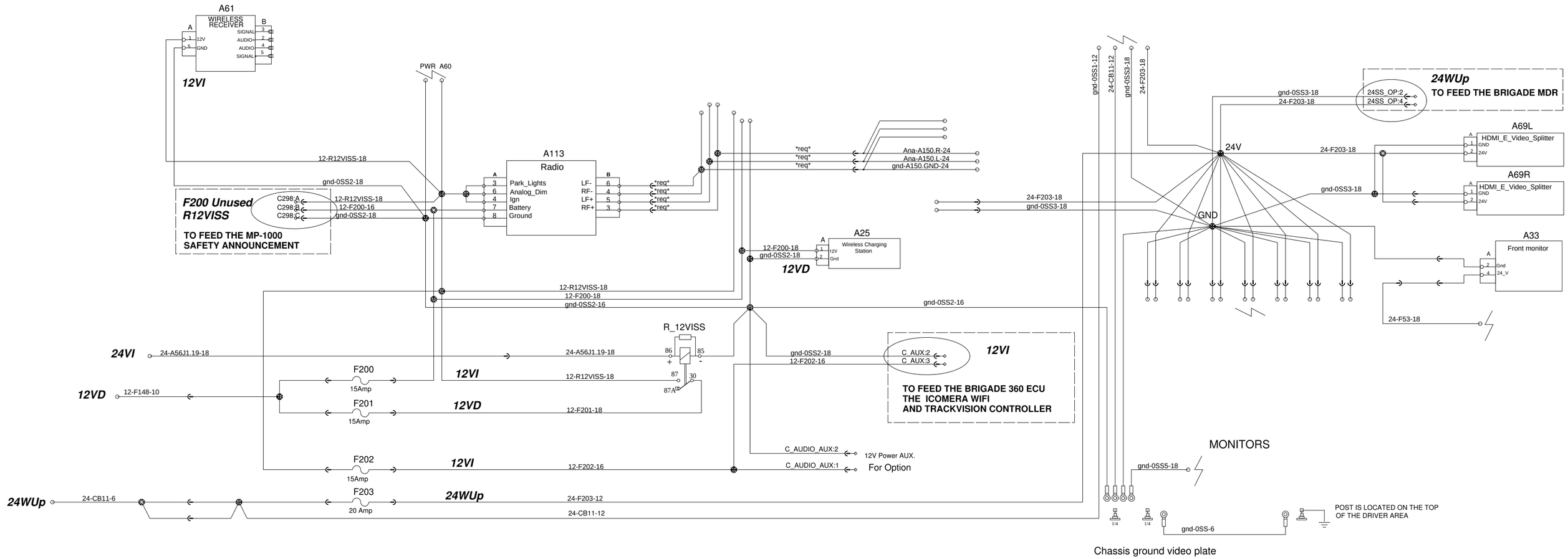

PREVOST®	WIRING DIAGRAM	No:D061640	Page:35.6 SP2	Rev:00

VSS HDMI
Sound and Video Sys Special Schematic
Customer Adaptation change Prw of components

IN SUMMARY
BRIGADE MDR ON 24WUP

ALL COMPONENTS BELOW ON 12VI
BRIGADE 360 ECU
ICOMERA WIFI I
WIRELESS MIC RECEIVER
TRACKVISION CONTROLLER
MP-1000 SAFETY ANNOUNCEMENT

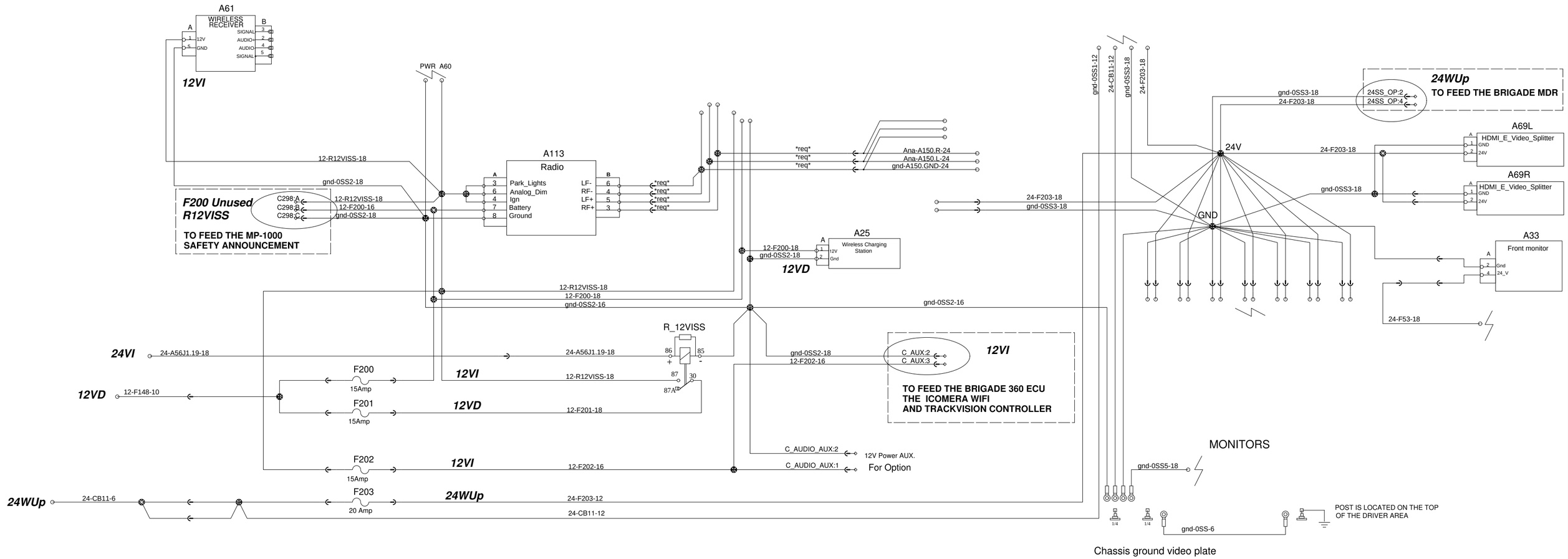

PREVOST®	WIRING DIAGRAM	No:D061640	Page:35.6 SP2	Rev:00

8 channels seat audio system HDMI

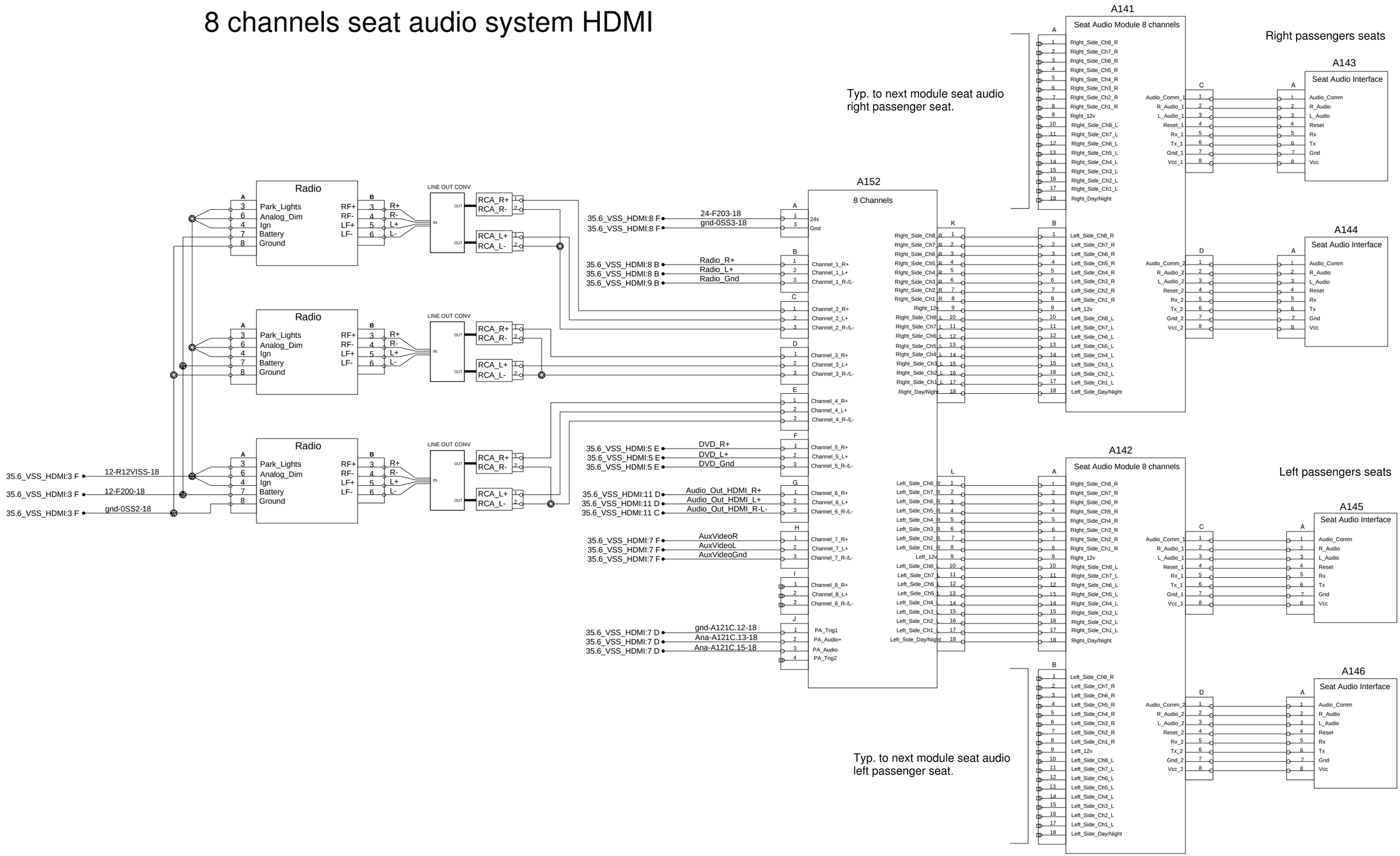

PREVOST®	WIRING DIAGRAM	No:D061640	Page:35.7	Rev:0

8 channels seat audio system HDMI

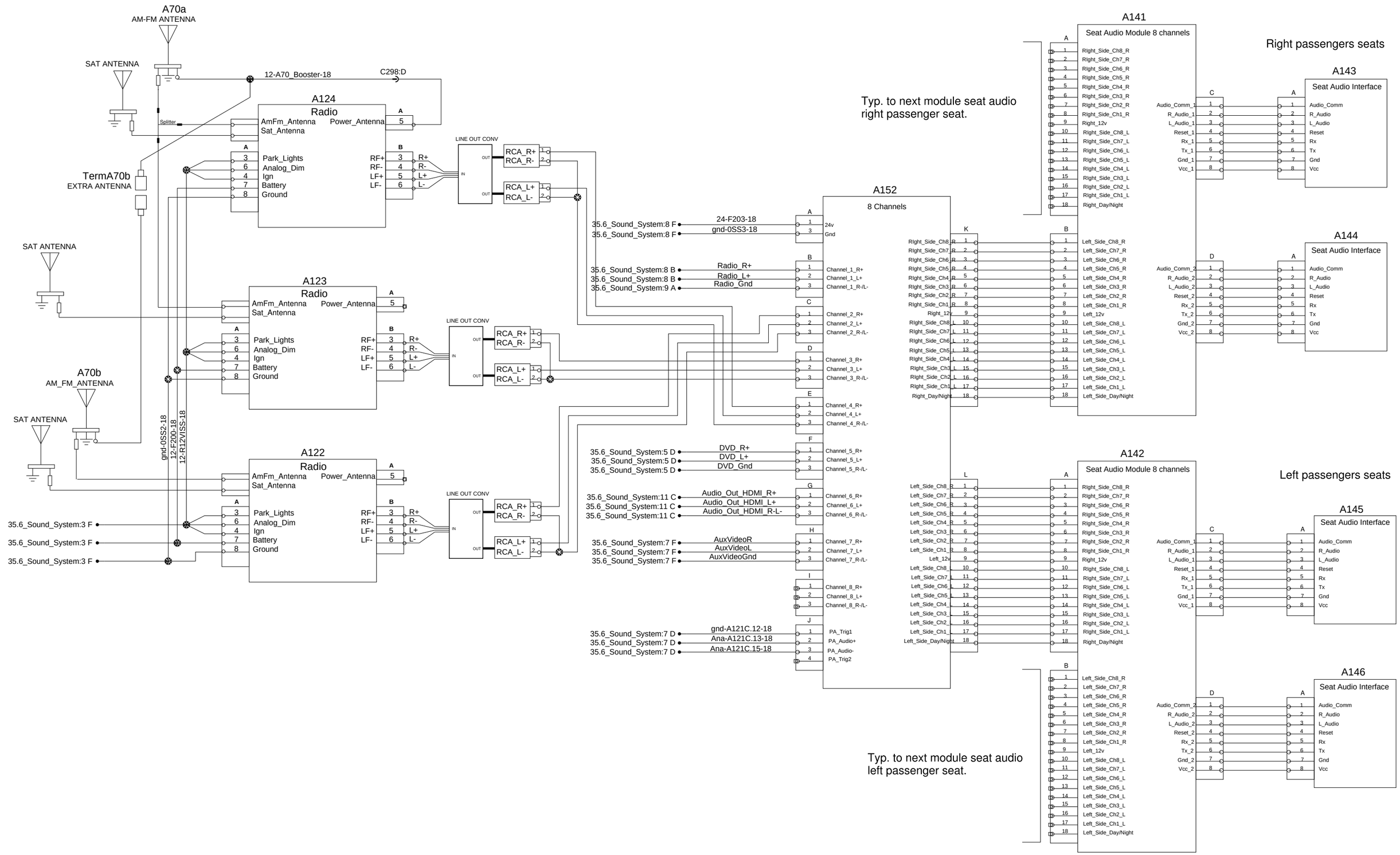

PREVOST®	WIRING DIAGRAM	No:D061640	Page:35.7	Rev:11

5 vdc regulator & audio input, HDMI

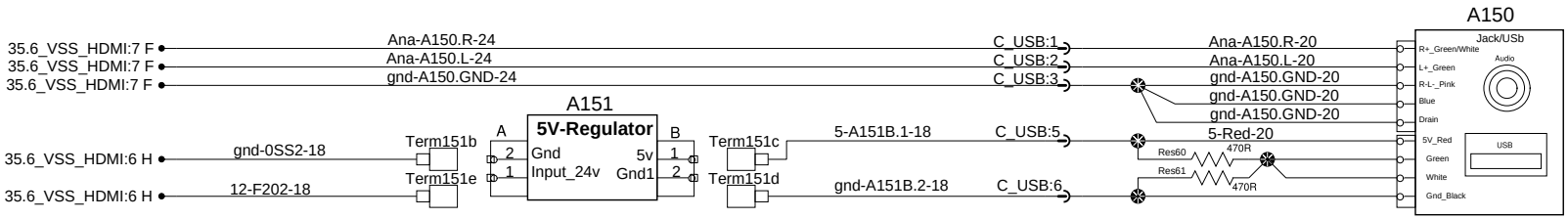

PREVOST®	WIRING DIAGRAM	No:D061640	Page:35.8	Rev:0

WIFI - Wireless System Option

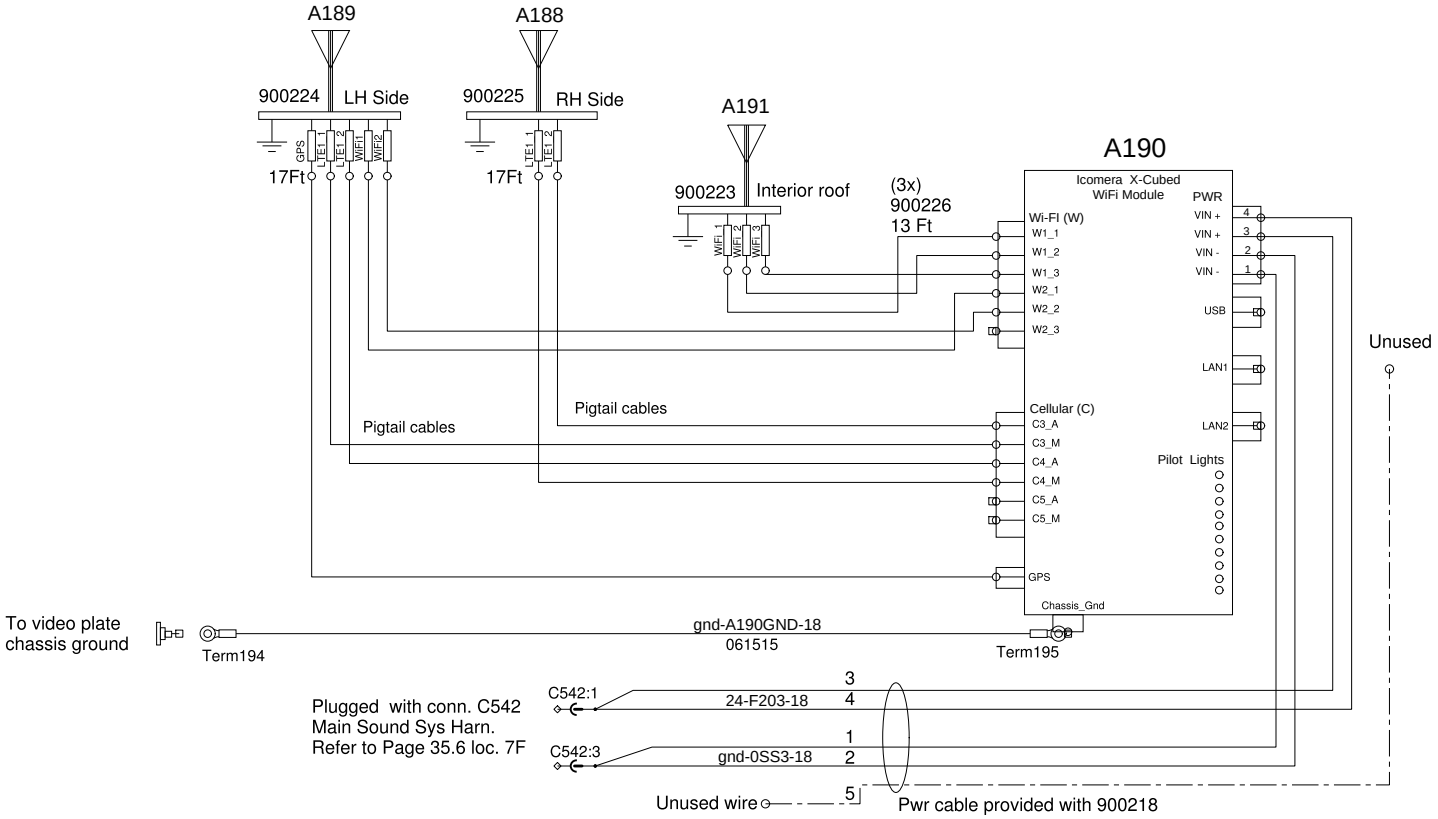

PREVOST®	WIRING DIAGRAM	No:D061640	Page:35.9	Rev:0

Passenger entertainement system

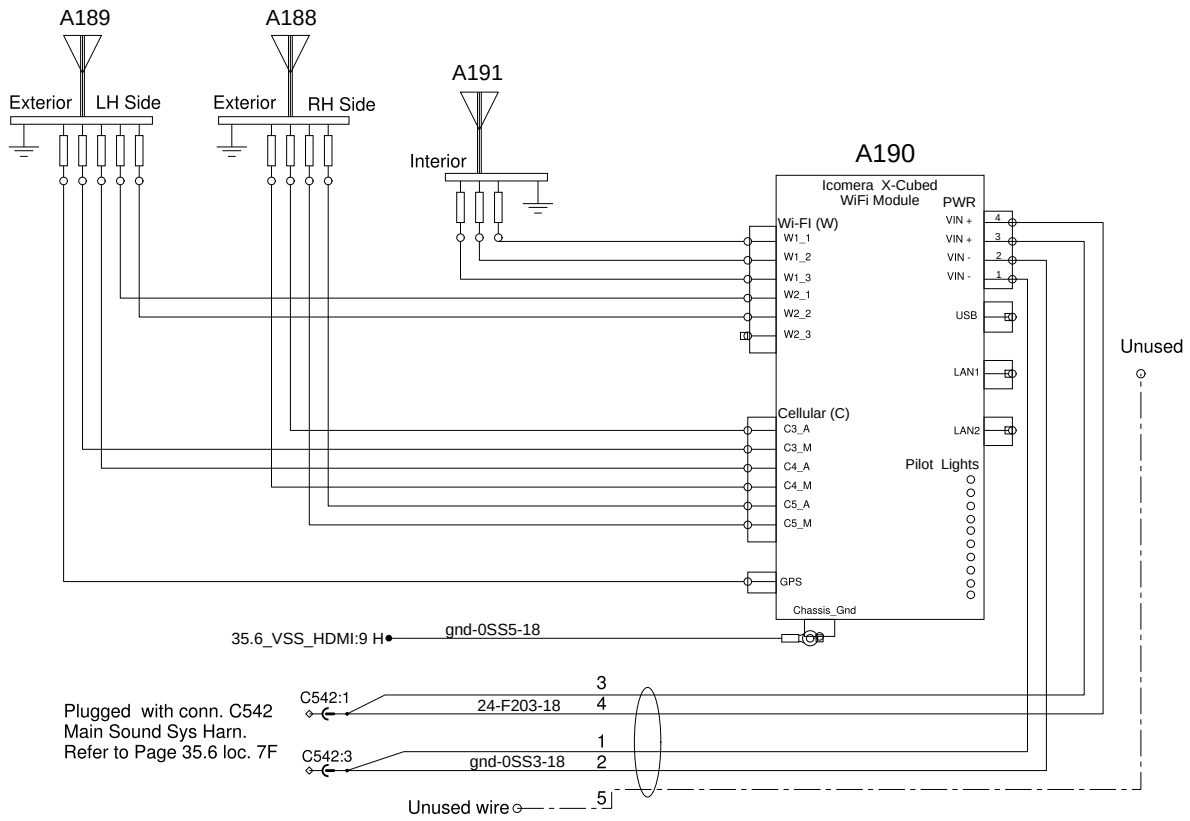

PREVOST®	WIRING DIAGRAM	No:D061640	Page:35.9	Rev:3

Passenger entertainement system

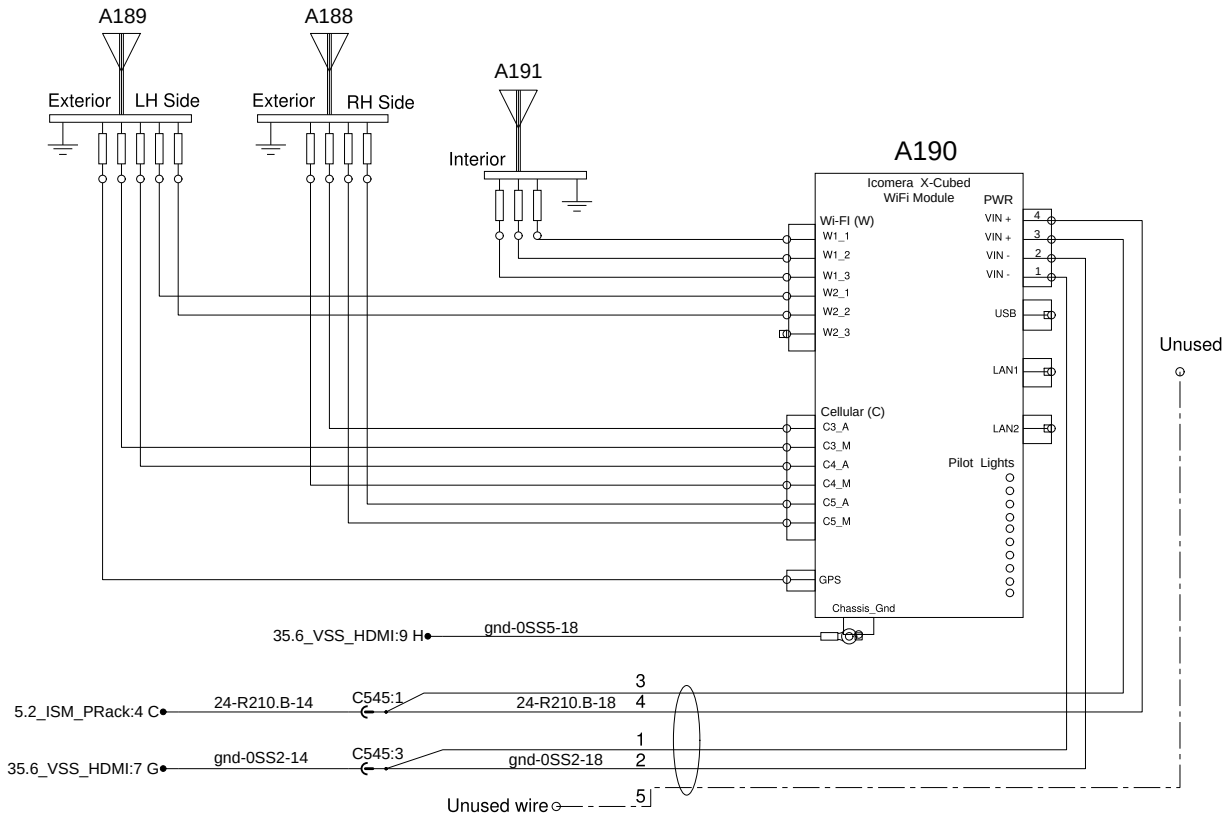

PREVOST®	WIRING DIAGRAM	No:D061640	Page:35.9	Rev:11

Wheel chair lift Ricon 9000

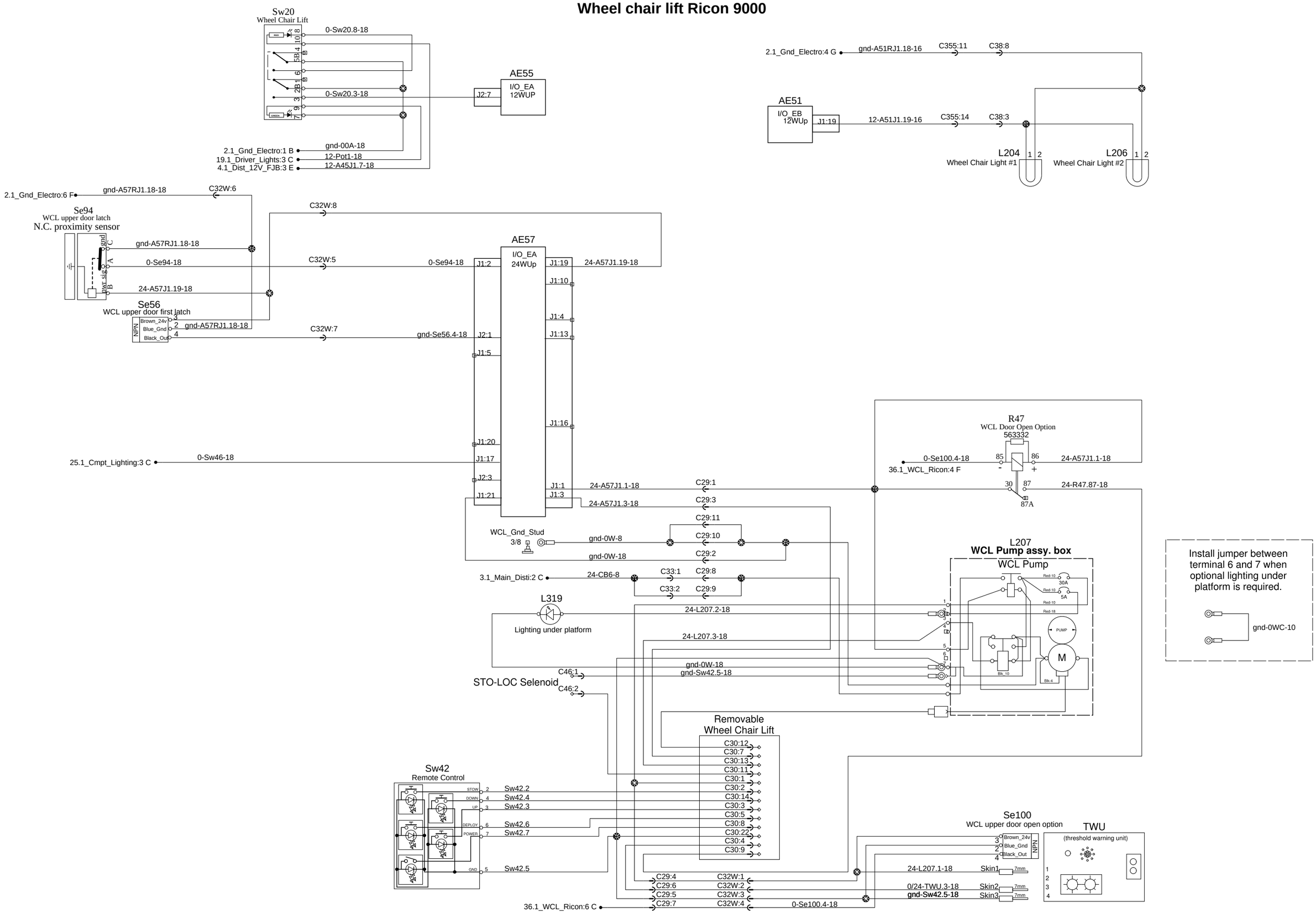

PREVOST®	WIRING DIAGRAM	No:D061640	Page:36.1	Rev:0

Volvo Link TGW

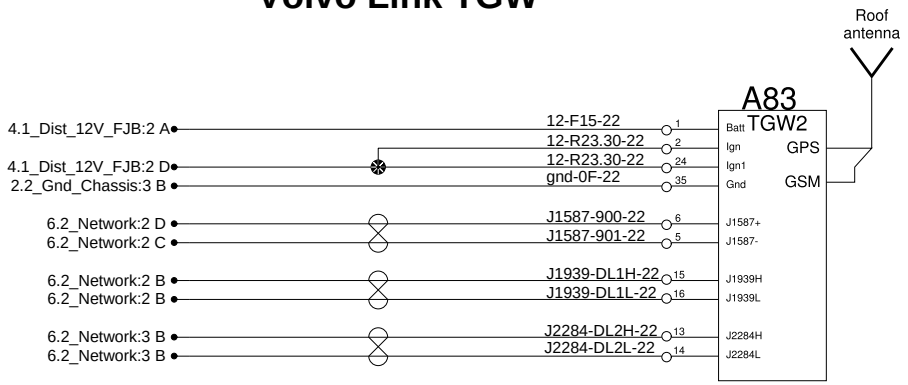

Air Dryer Electric Control and Heater

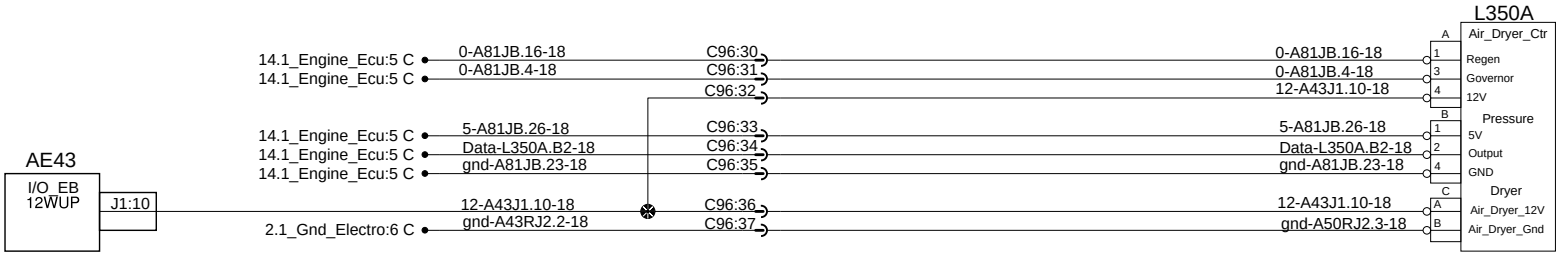

Volvo Link TGW

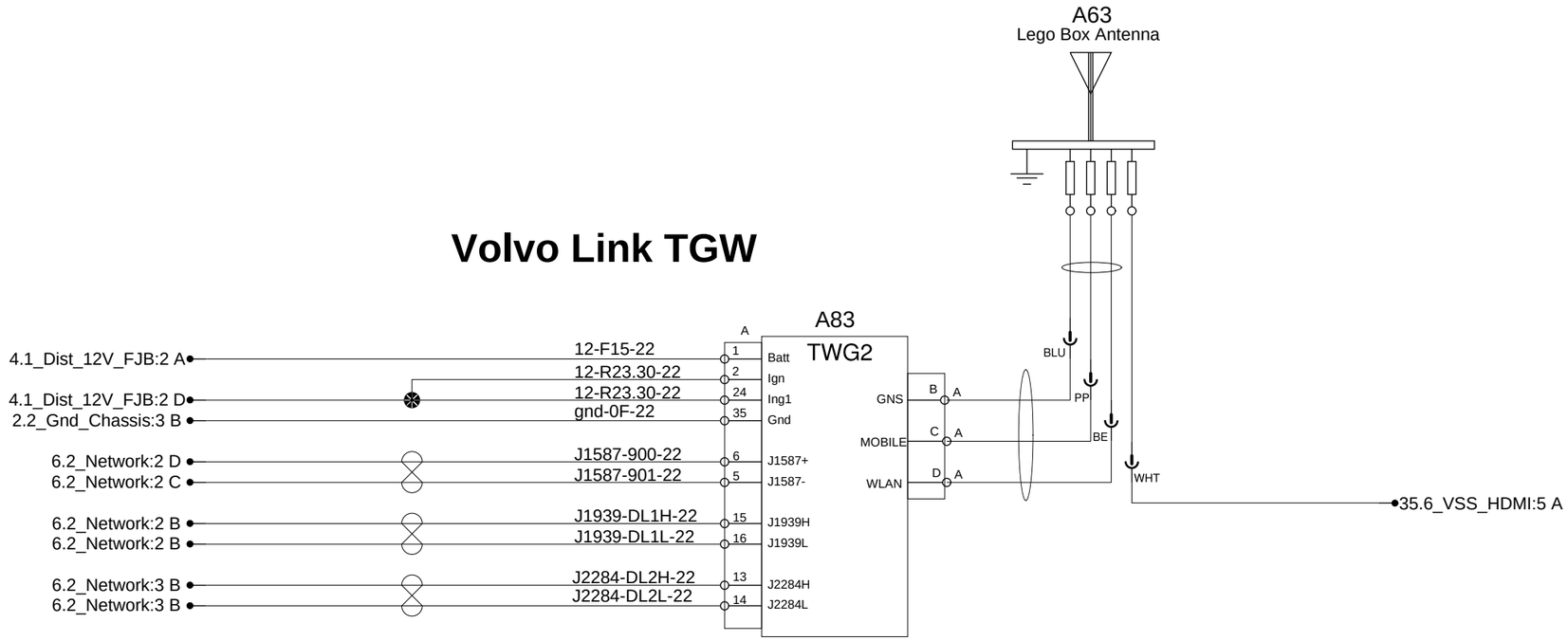

Air Dryer Electric Control and Heater

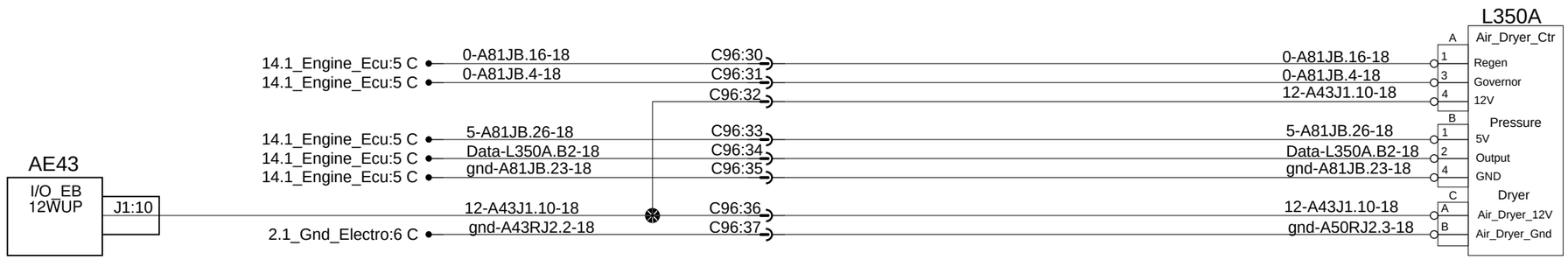

ZF Steering control

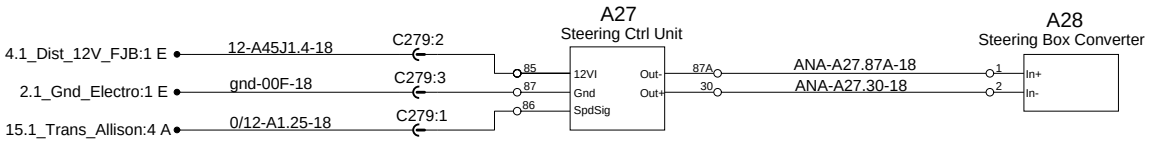

Automatic fire suppression system

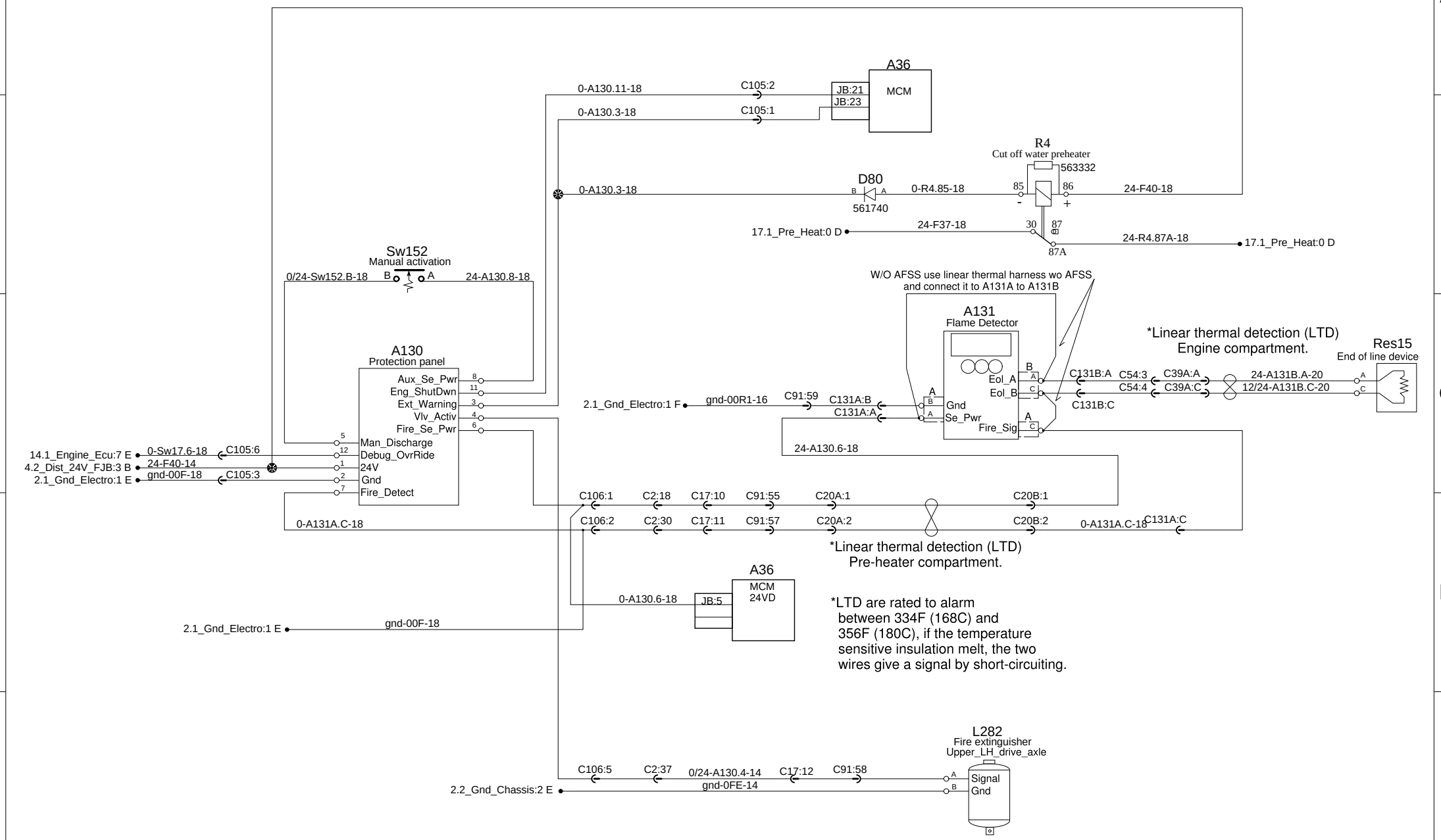

PREVOST®	WIRING DIAGRAM	No:D061640	Page:38.1	Rev:0

Automatic fire suppression system

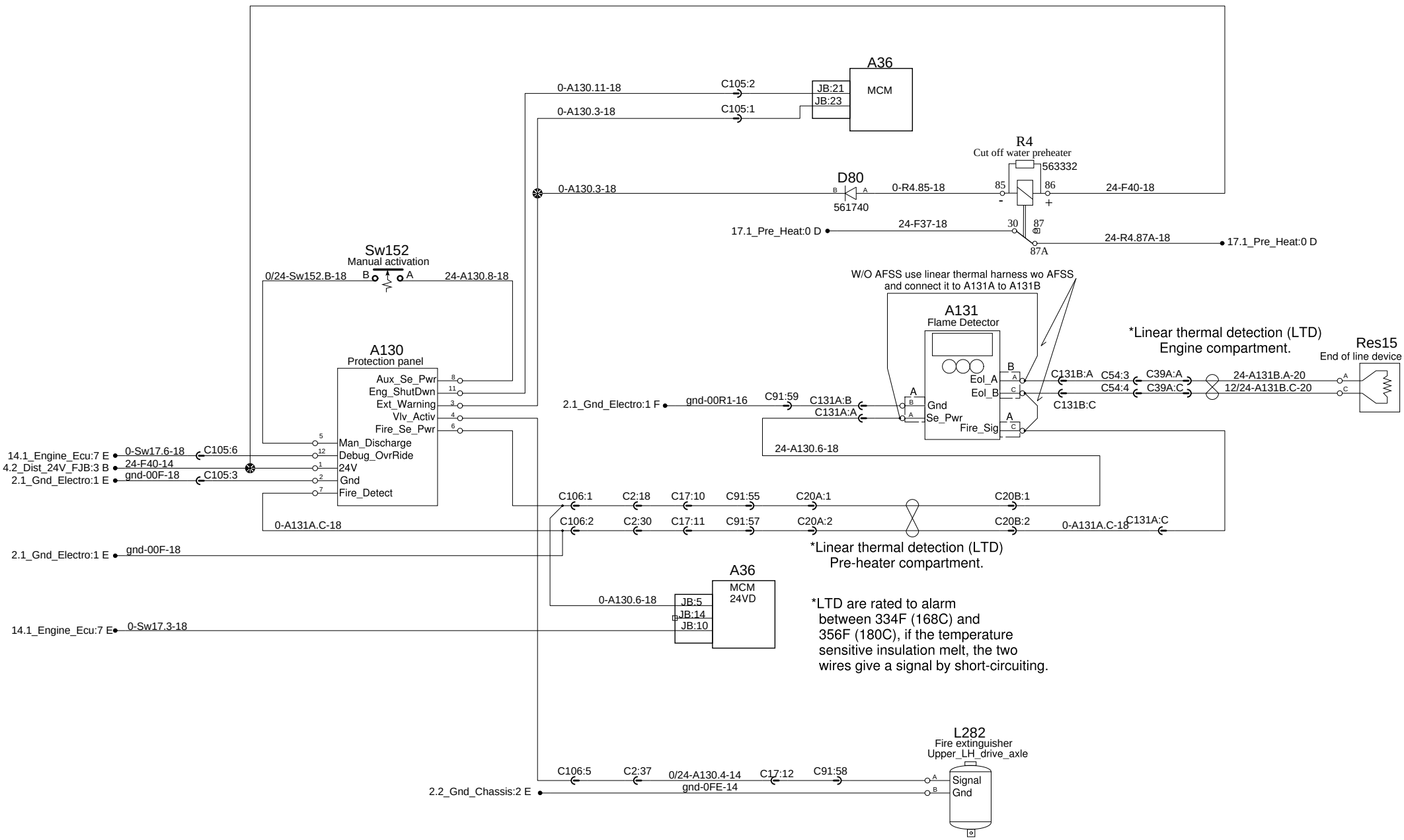

PREVOST®	WIRING DIAGRAM	No:D061640	Page:38.1	Rev:9

Tire pressure monitoring system

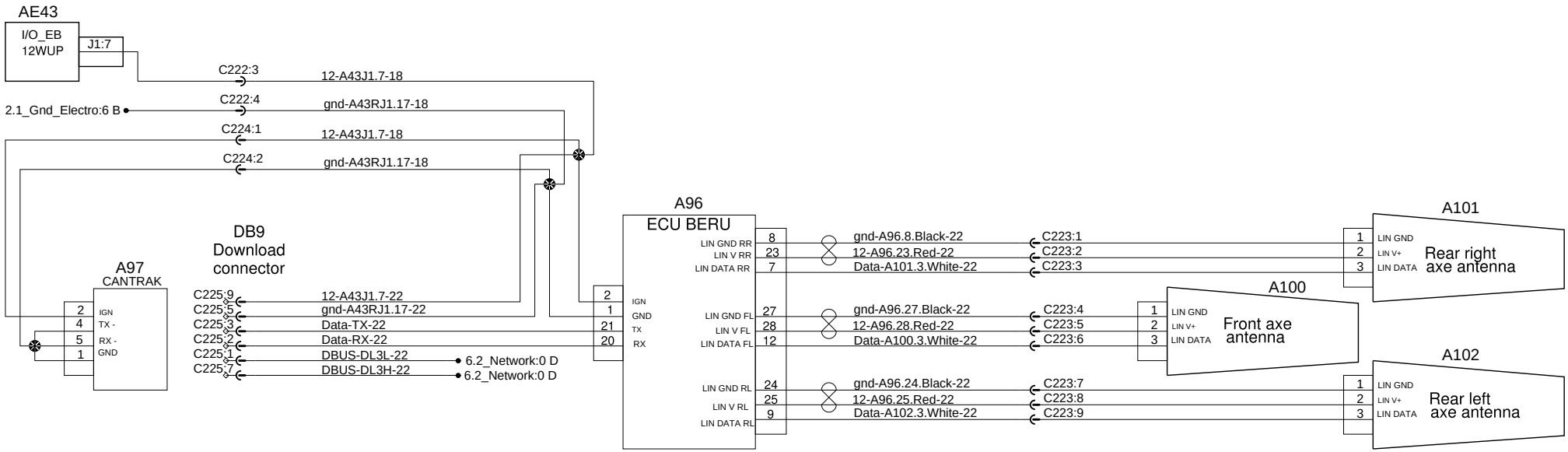

Adaptative cruise control breaking

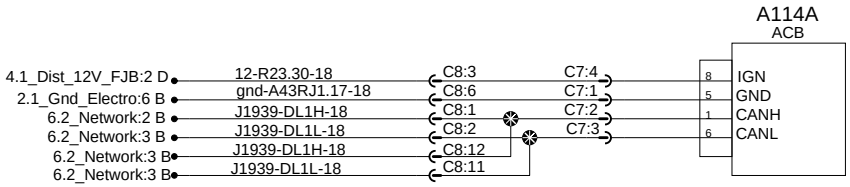

Tire pressure monitoring system

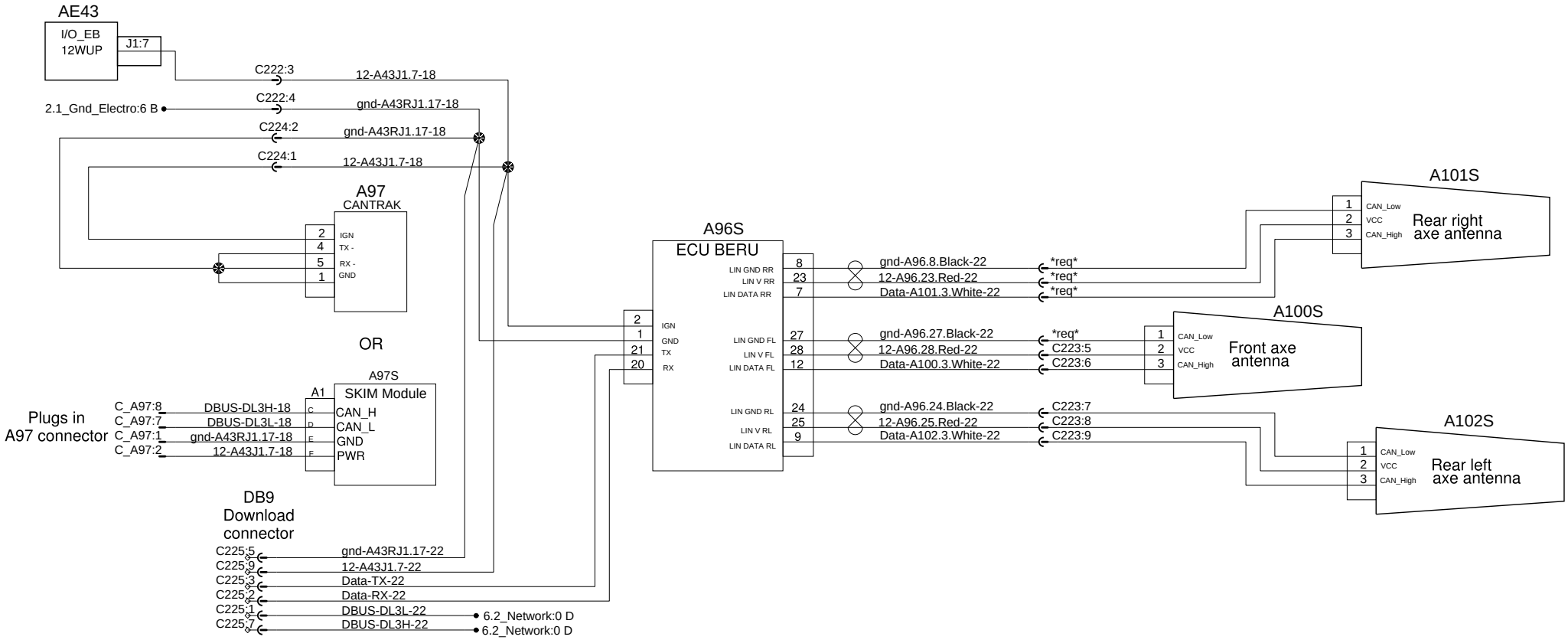

Adaptative cruise control breaking

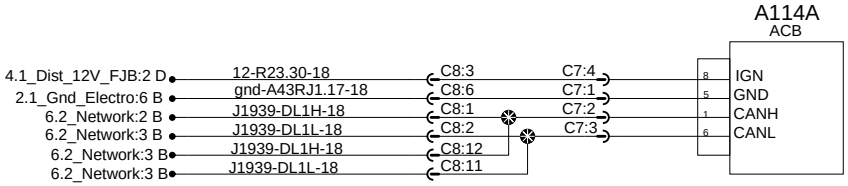

PREVOST®	WIRING DIAGRAM	No:D061640	Page:39.1	Rev:9

Tire pressure monitoring system

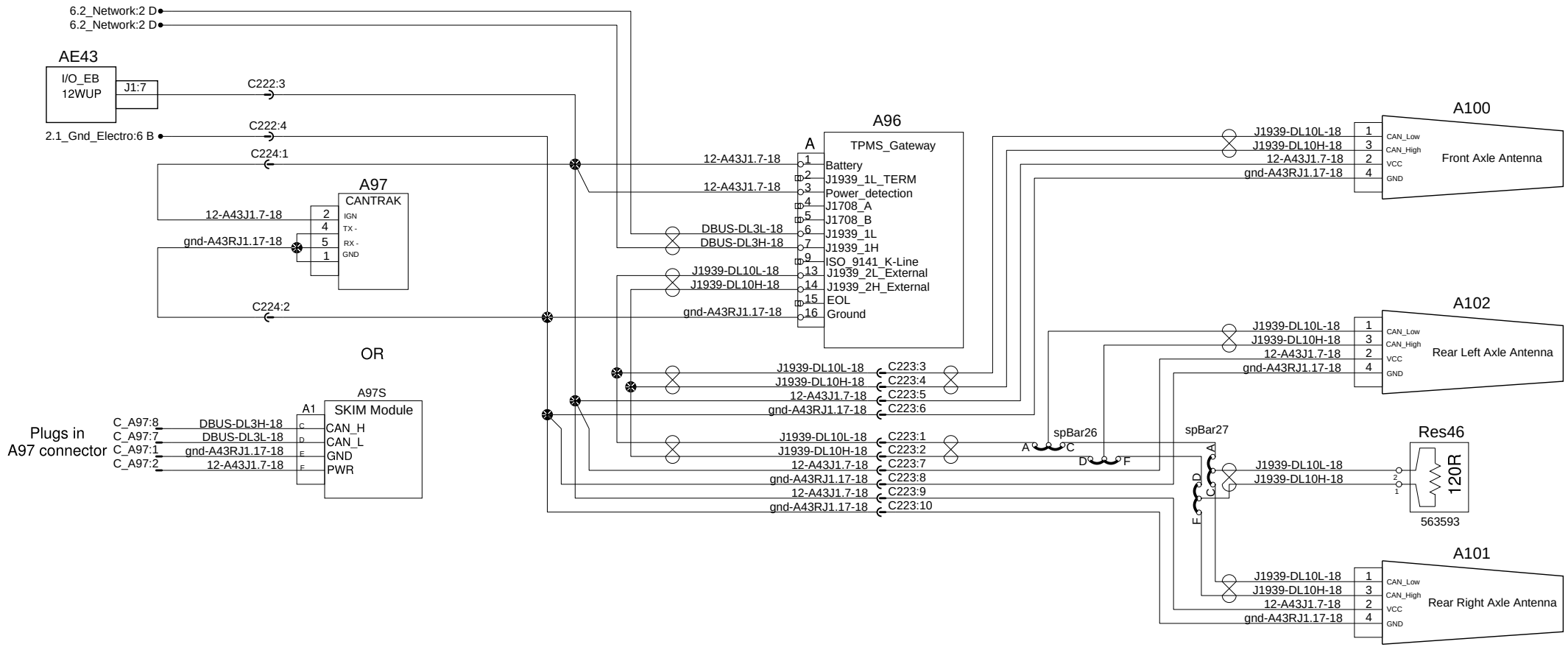

PREVOST®	WIRING DIAGRAM	No:D061640	Page:39.1	Rev:13

Tire pressure monitoring system

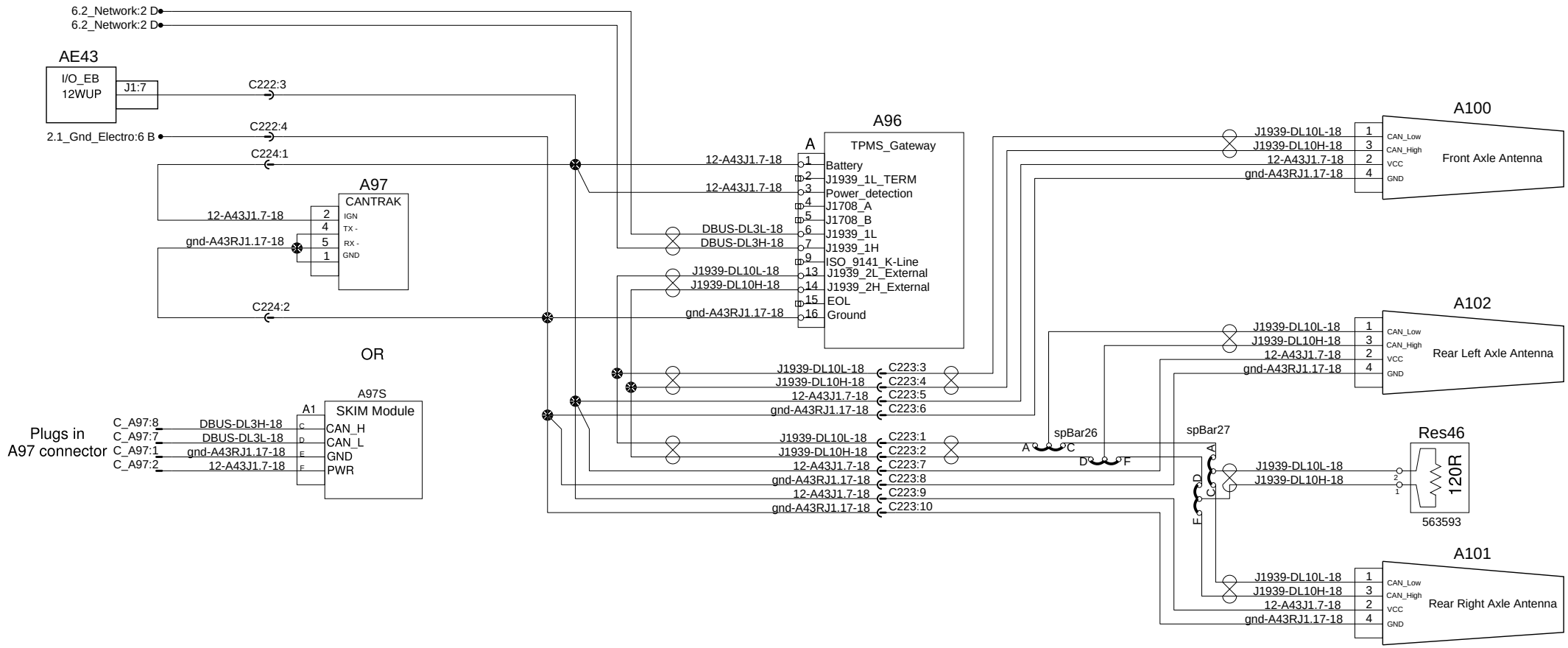

PREVOST®	WIRING DIAGRAM	No:D061640	Page:39.1	Rev:15

Inverter (1 or 2) & 120VAC outlets

Typical representation - Quantity change with Seat Layout

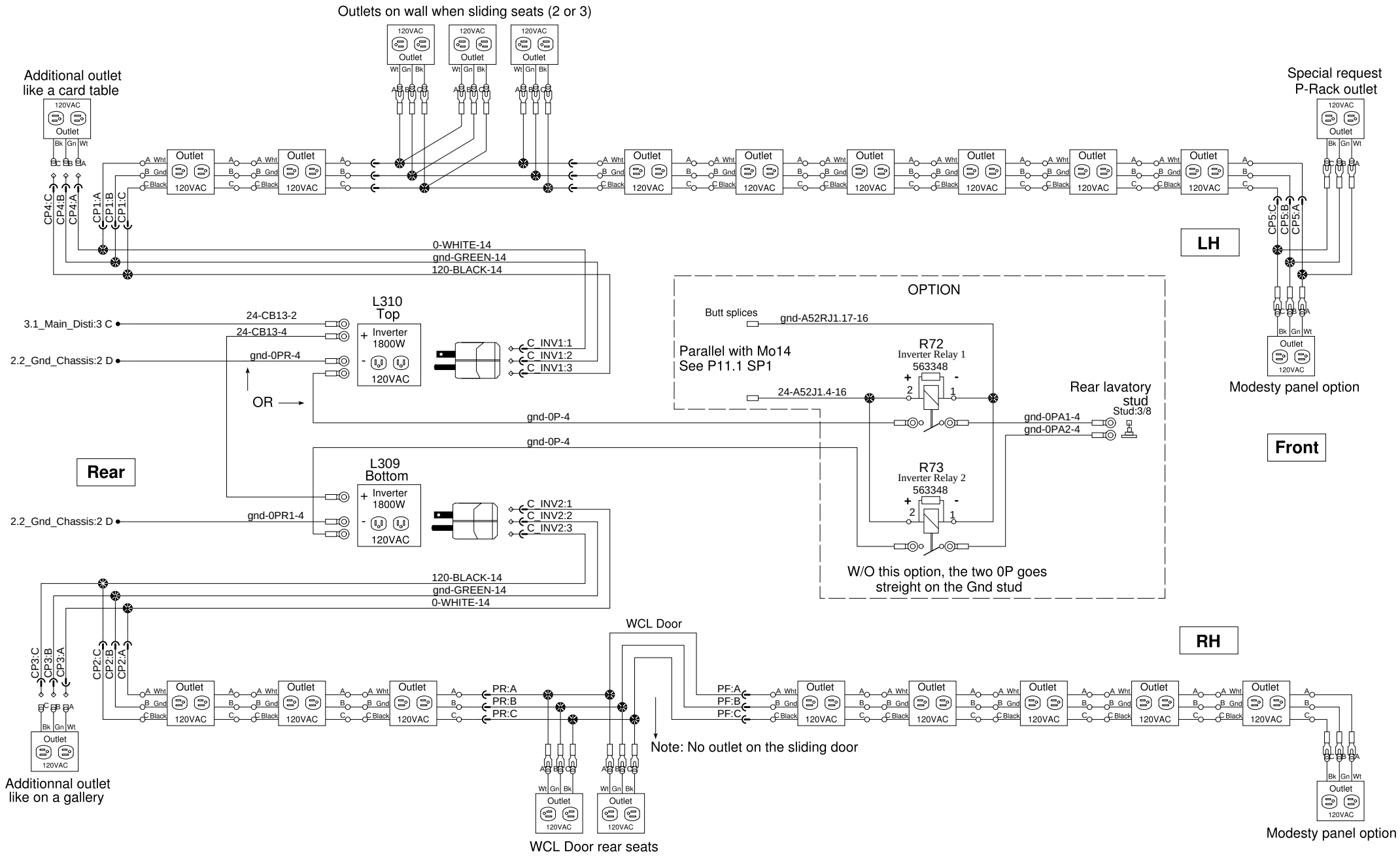

PREVOST®	WIRING DIAGRAM	No:D061640	Page:40.1	Rev:0

Inverter (1 or 2) & 120VAC outlets

Typical representation - Quantity change with Seat Layout

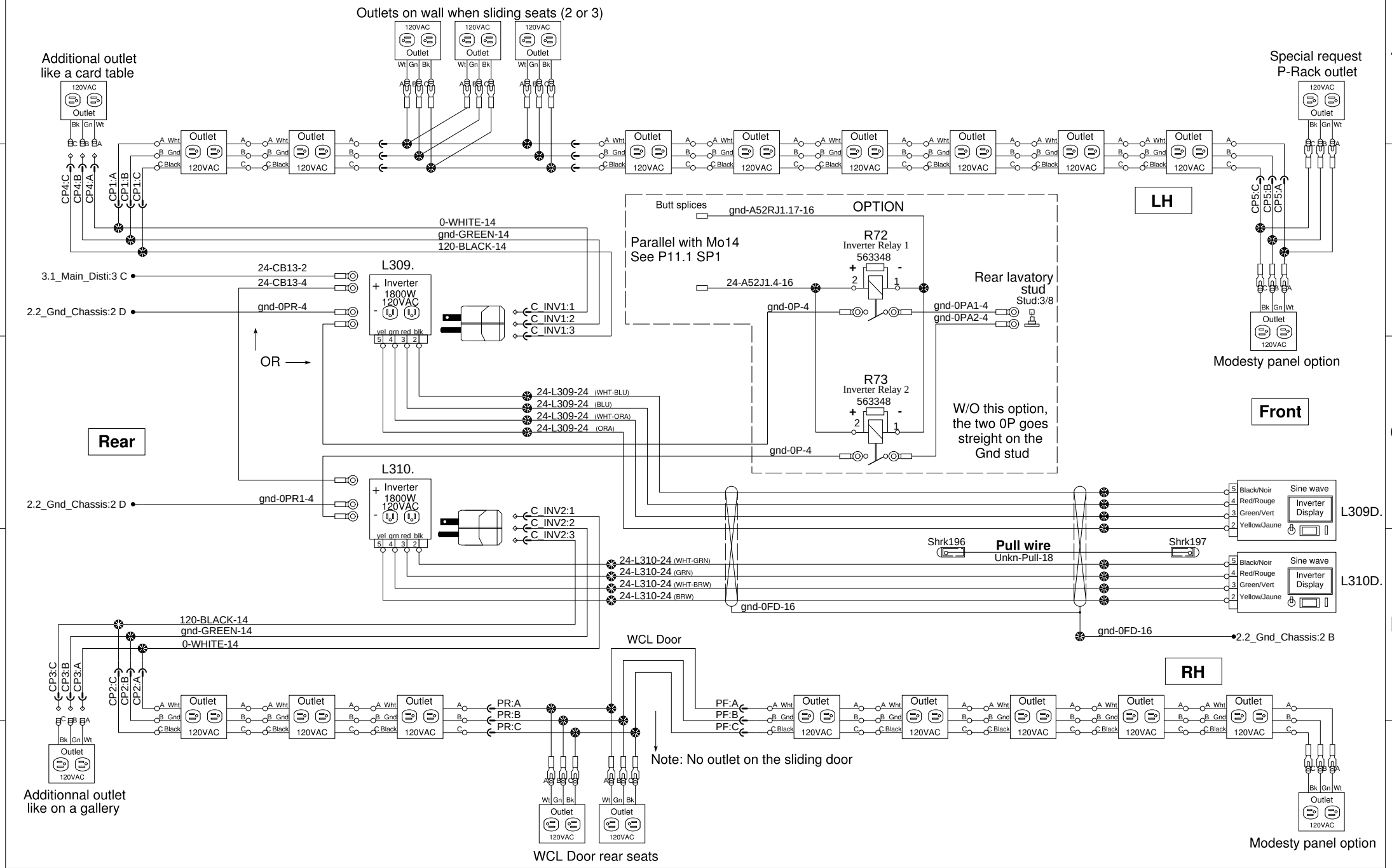

PREVOST®	WIRING DIAGRAM	No:D061640	Page:40.1	Rev:06

Inverter (1 or 2) & 120VAC outlets

Typical representation - Quantity change with Seat Layout

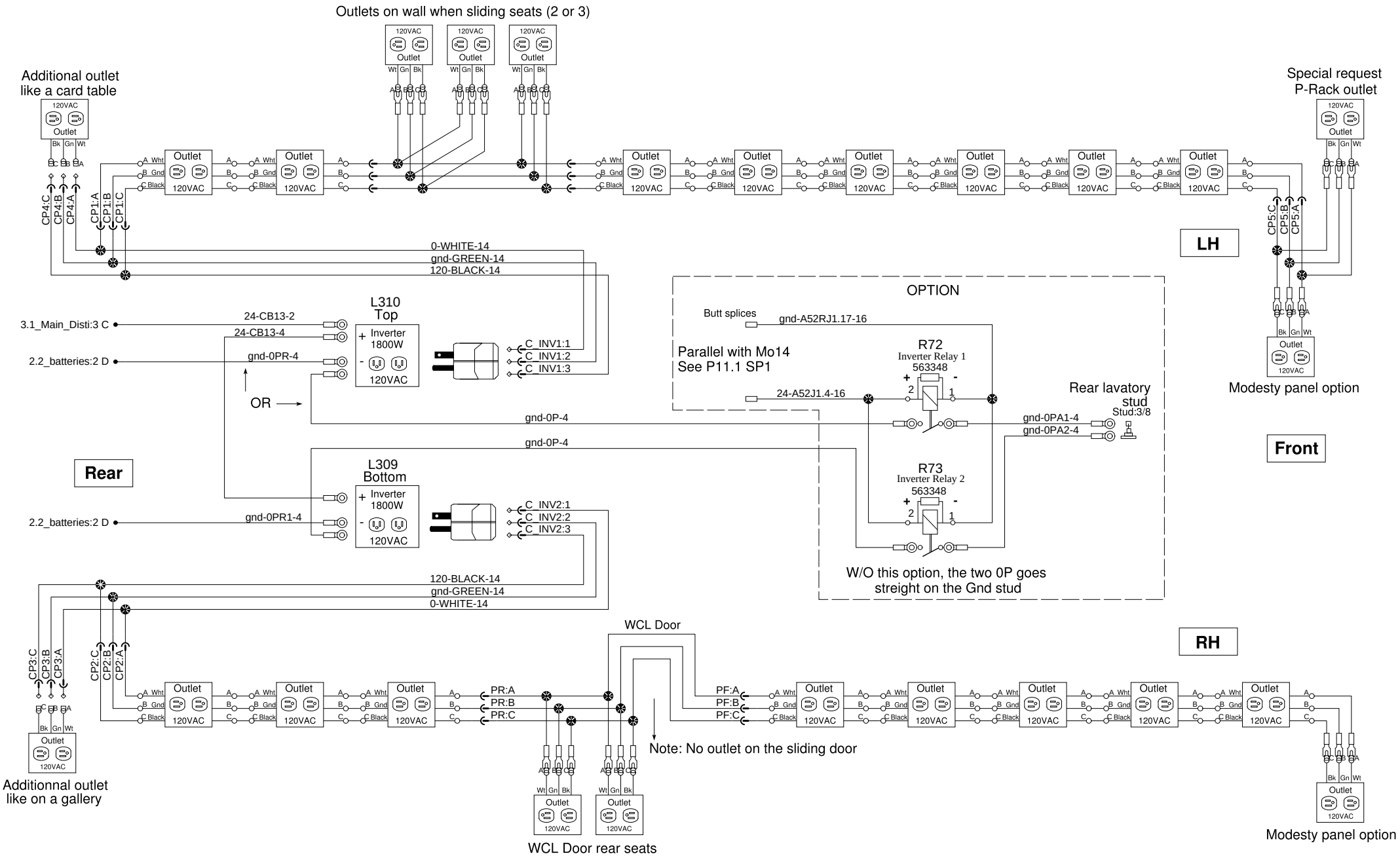

PREVOST®	WIRING DIAGRAM	No:D061640	Page:40.1 SP1	Rev:0

Inverter (1 or 2) & 120VAC outlets

Typical representation - Quantity change with Seat Layout

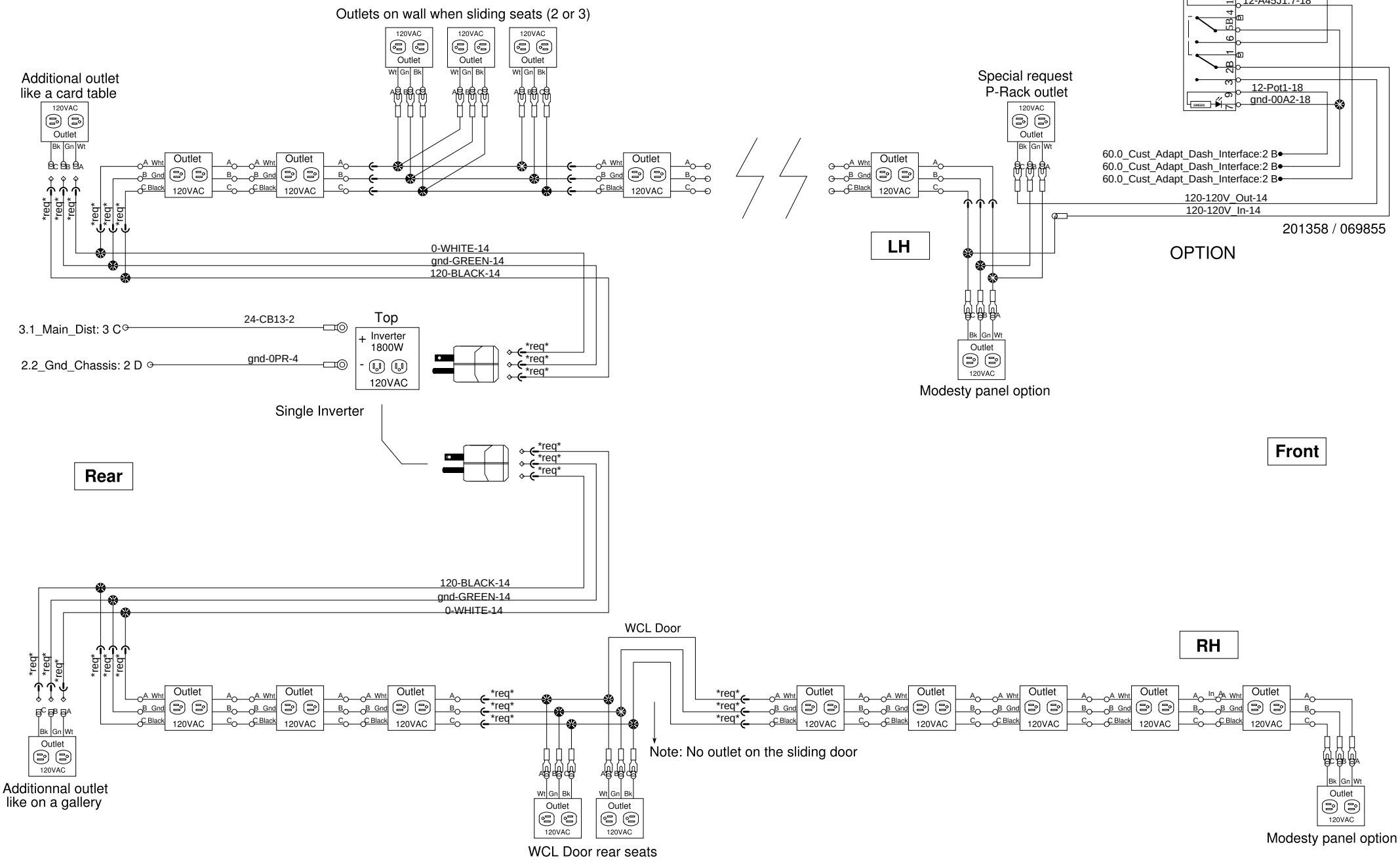

PREVOST®	WIRING DIAGRAM	No:D061640	Page:40.1SP2	Rev:00

Inverters & 120V AC Outlets
Customer Adaptation for additionnal outlets

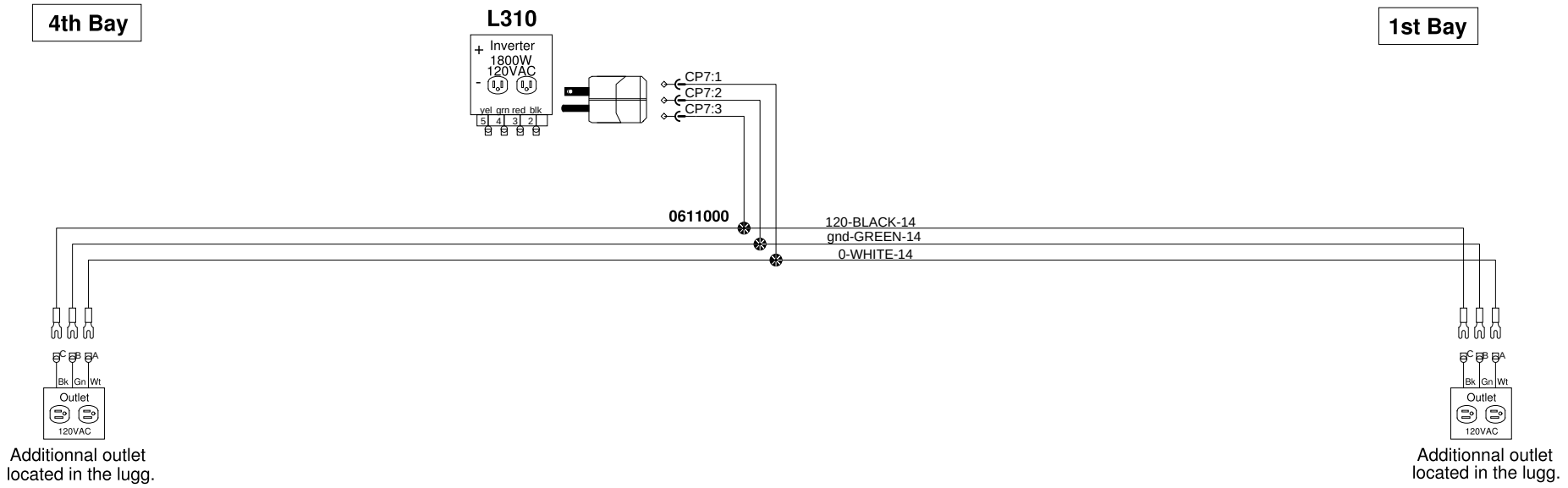

PREVOST®	WIRING DIAGRAM	No:D061640	Page:40.1 SP4	Rev:00

Inverter (1 or 2) & 120VAC outlets

Typical representation - Quantity change with Seat Layout

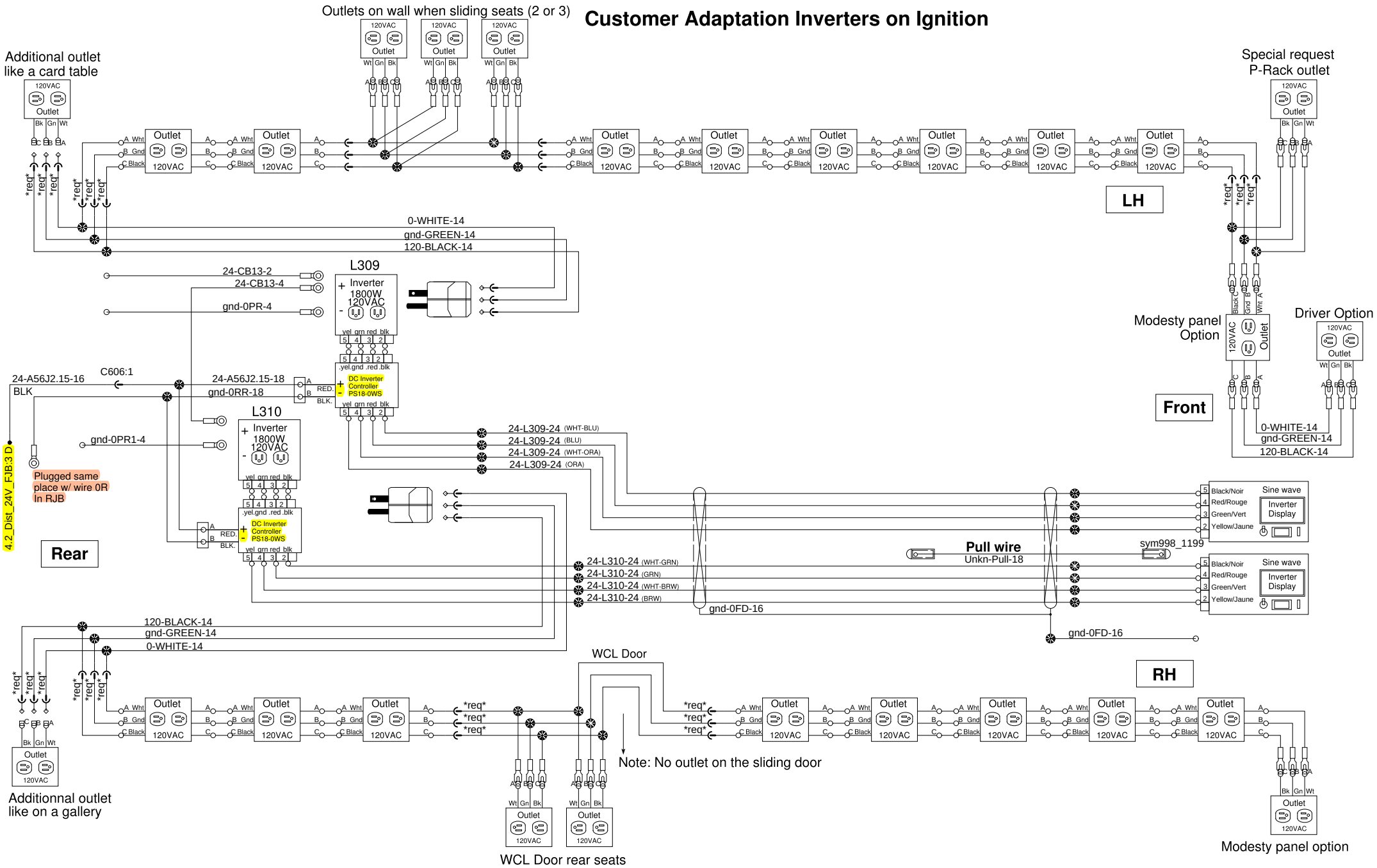

PREVOST®	WIRING DIAGRAM	No:D061640	Page:40.1 SP5	Rev:00

Inverter (1 or 2) & 120VAC outlets
Customer Adaptation additionnal parcel rack outlet

Refer to P40.1 (STD) for all details

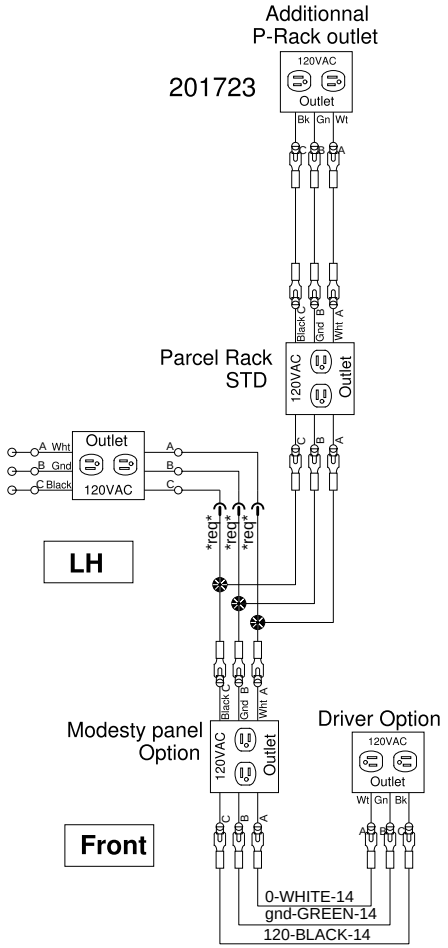

PREVOST®	WIRING DIAGRAM	No:D061640	Page:40.1 SP6	Rev:00

Steering multifunctions

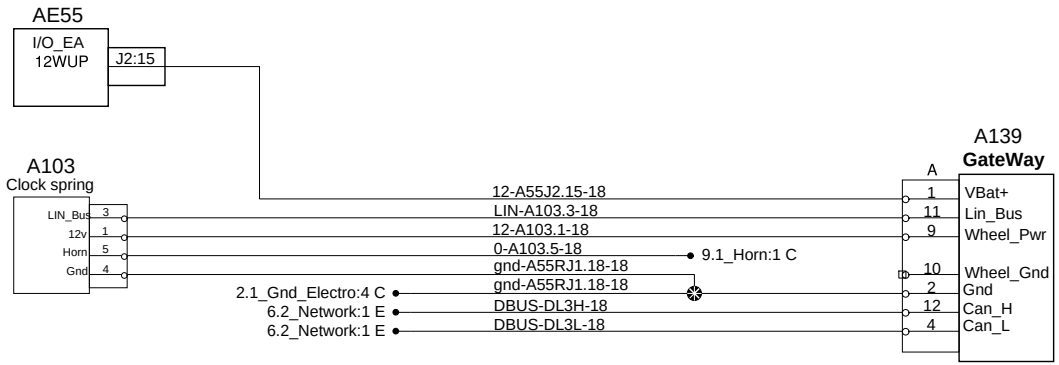

Sun visors

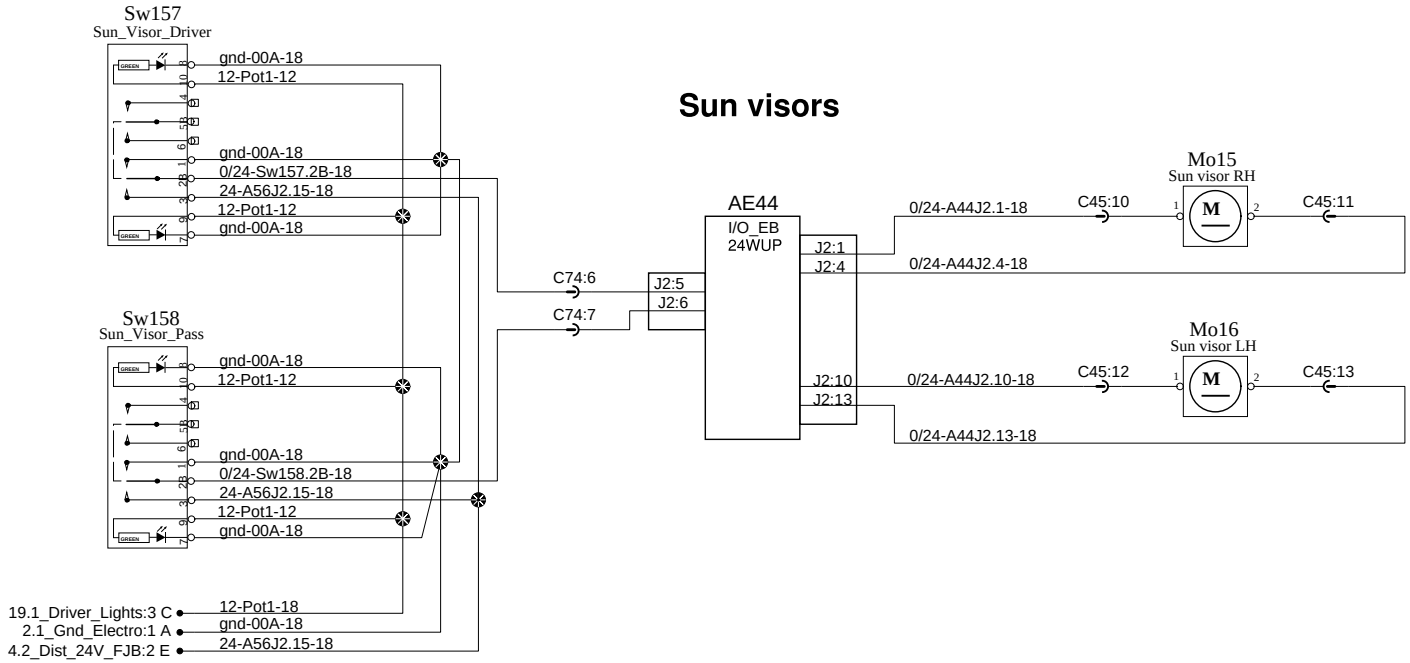

CTGI - Customer Telematic Gateway Interface
J1939

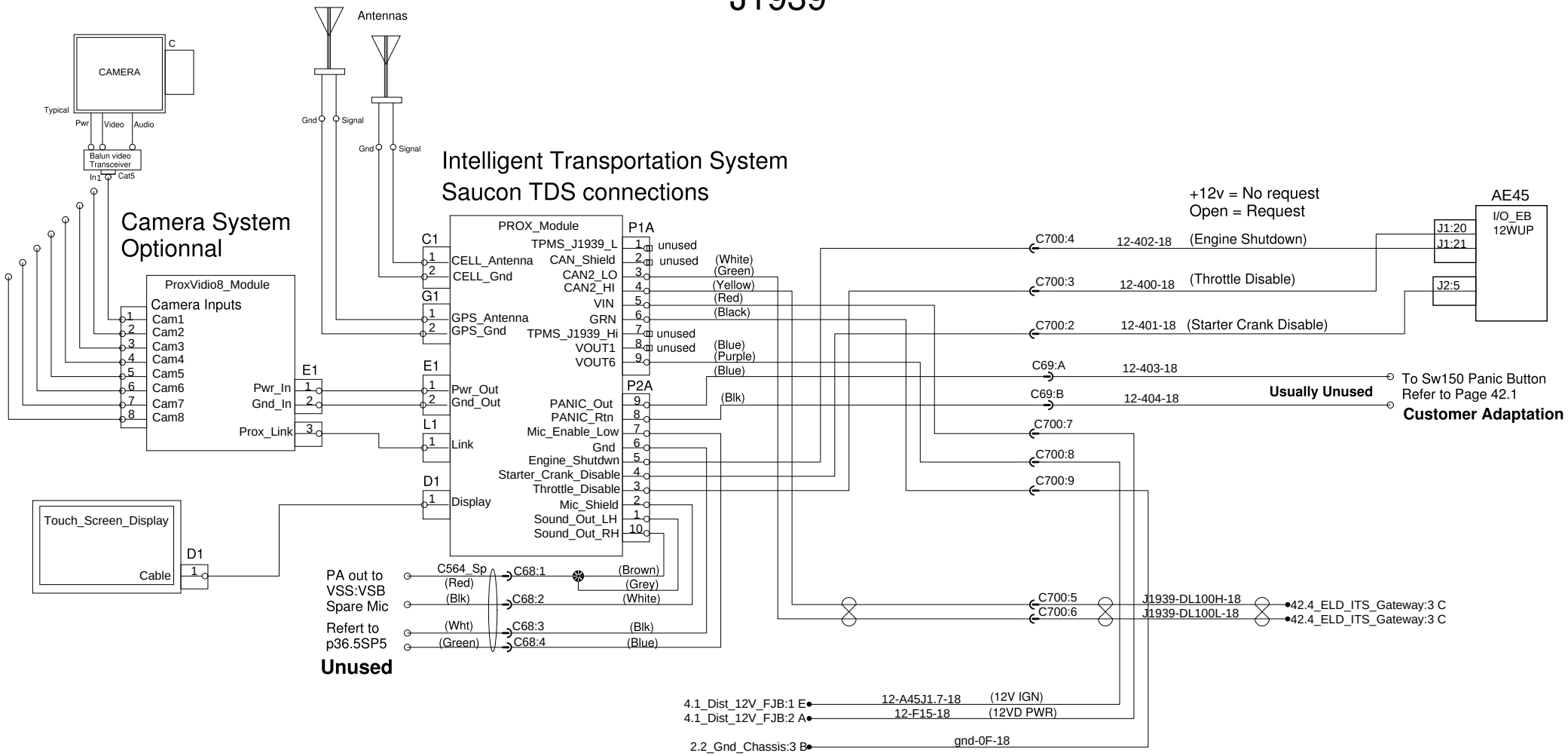

PREVOST®	WIRING DIAGRAM	No:D061640	Page:42.3	Rev:0

CTGI - Customer Telematic Gateway Interface
J1939
<<MASTER>>

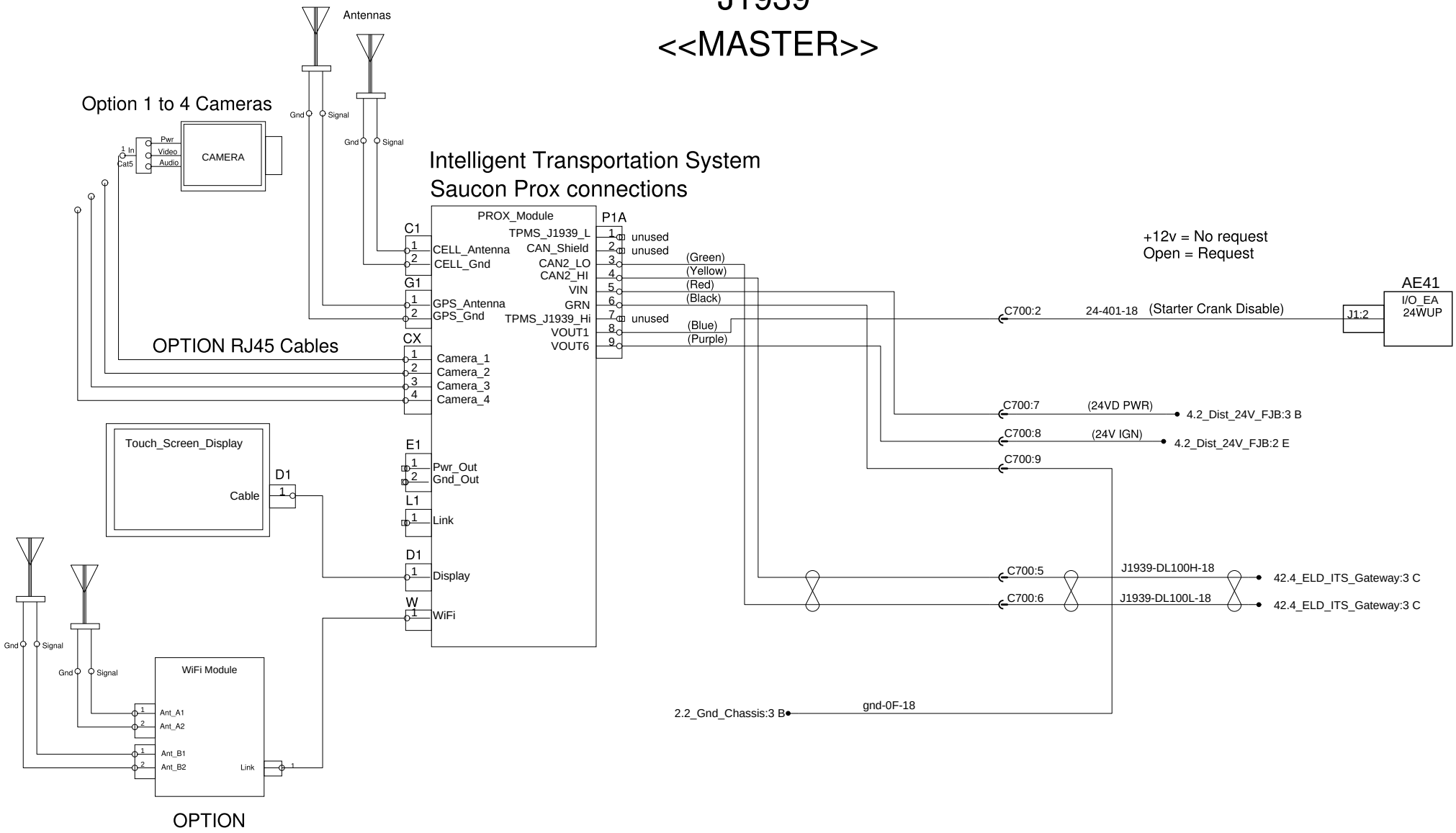

PREVOST®	WIRING DIAGRAM	No:D061640	Page:42.3 SP1	Rev:01

Saucon - Basic ELD
Customer Adaptation

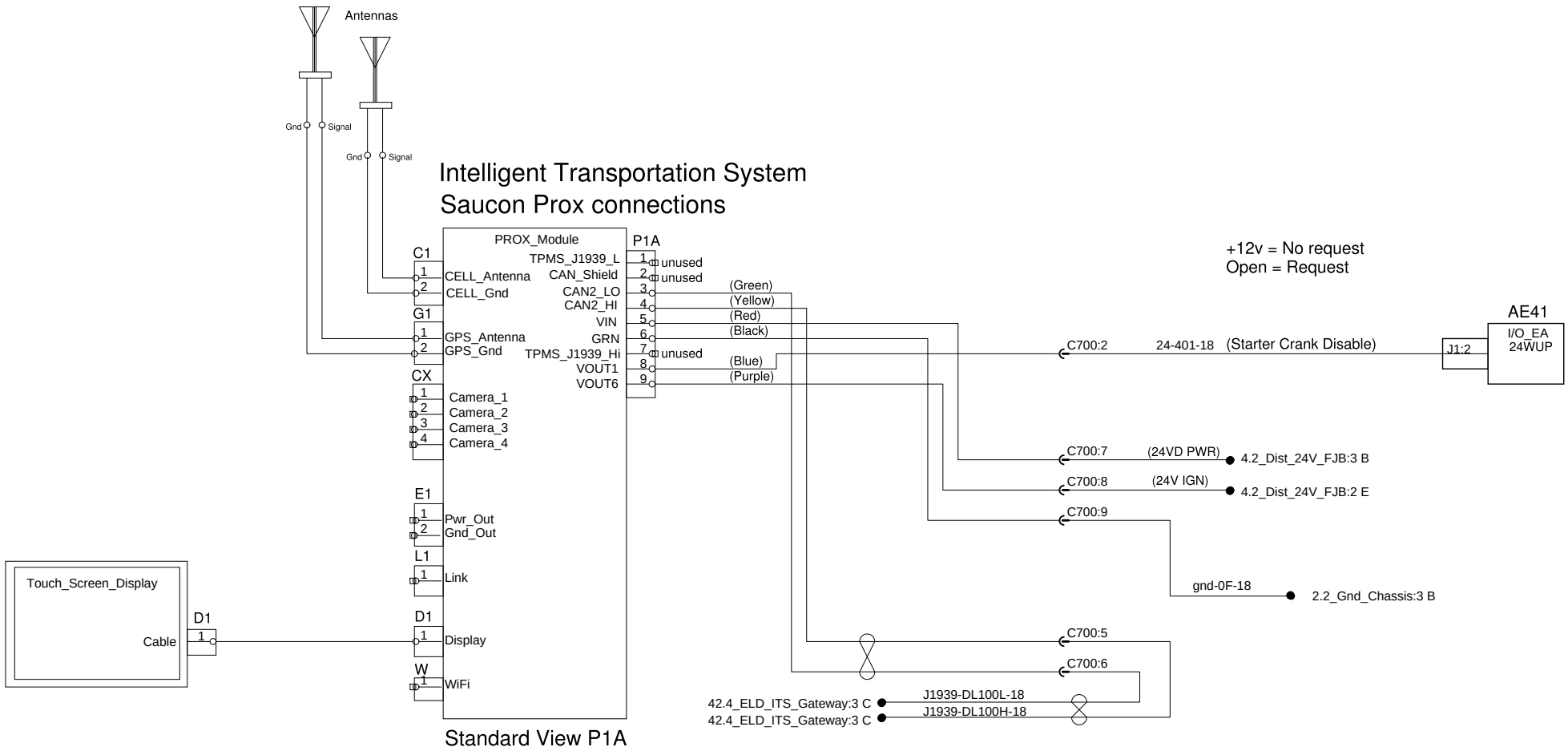

PREVOST®	WIRING DIAGRAM	No:D061640	Page:42.3 SP2	Rev:02

Saucon Prox ELD - With WiFi Option
Customer Adaptation

Intelligent Transportation System
Saucon Prox connections

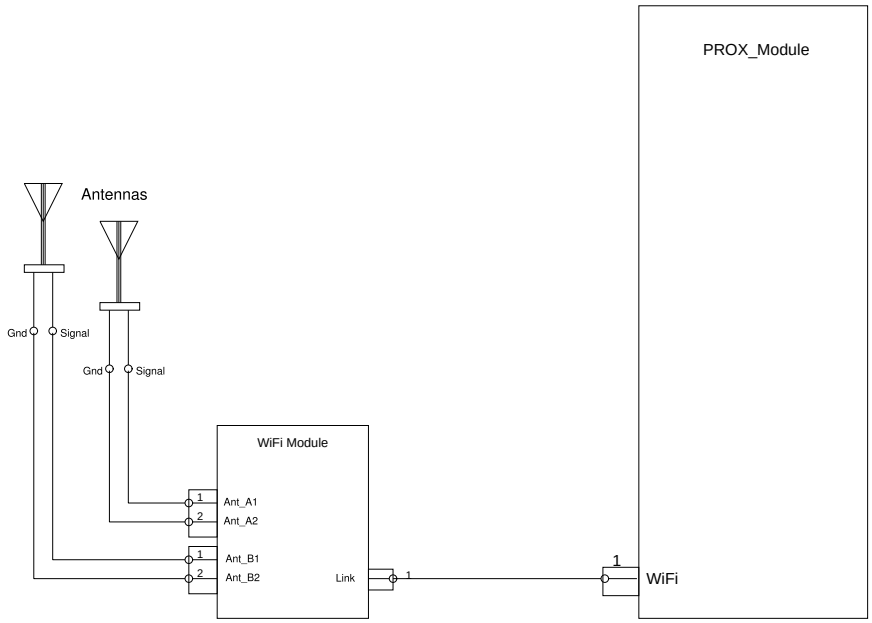

PREVOST®	WIRING DIAGRAM	No:D061640	Page:42.3 SP3	Rev:00

Saucon Prox ELD - with 4 Cameras

Customer Adaptation

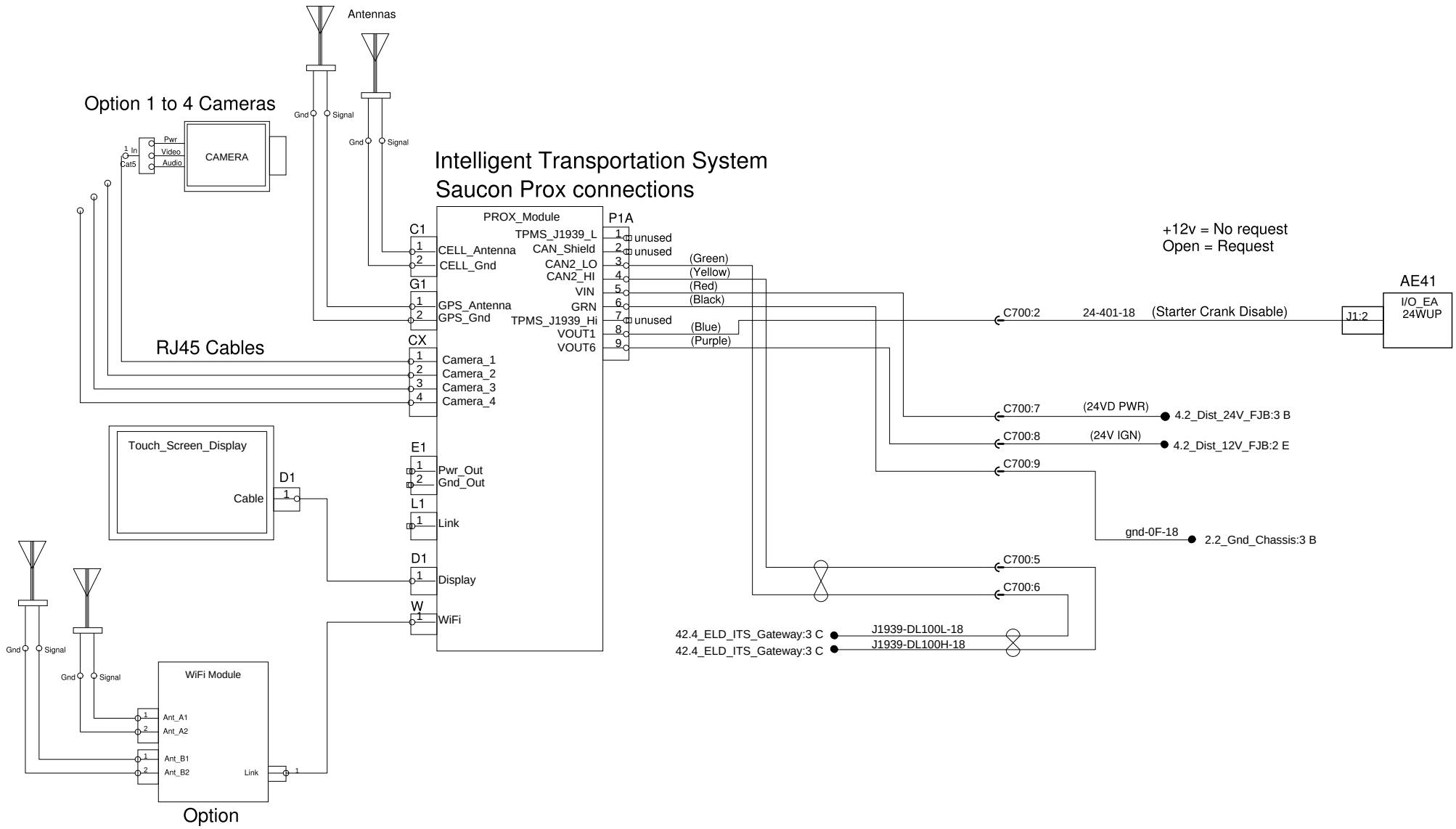

PREVOST®	WIRING DIAGRAM	No:D061640	Page:42.3 SP4	Rev:02

Saucon Prox ELD - with 8 Cameras
Customer Adaptation

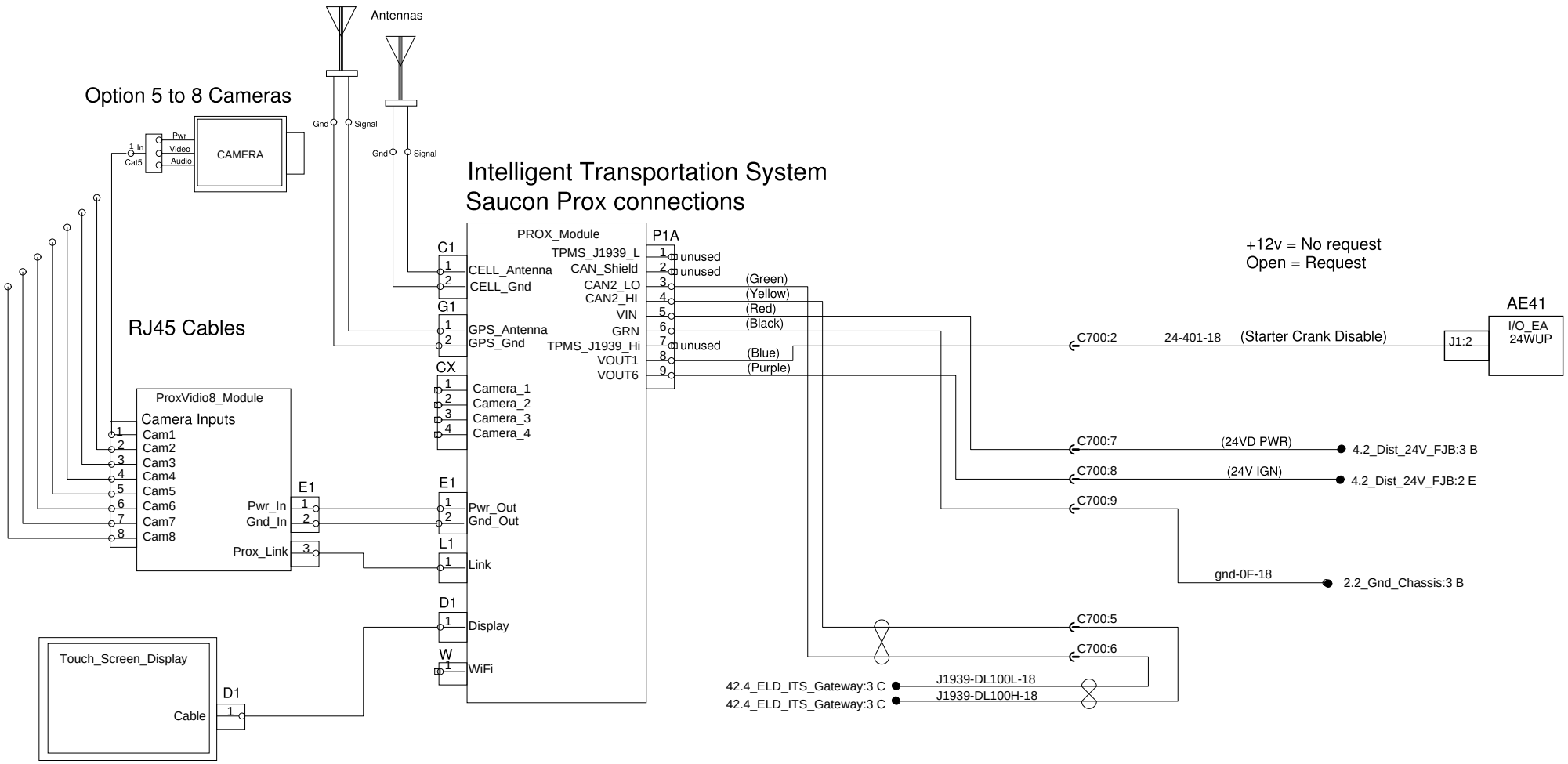

PREVOST®	WIRING DIAGRAM	No:D061640	Page:42.3 SP5	Rev:02

ELD / ITS J1939 Gateway

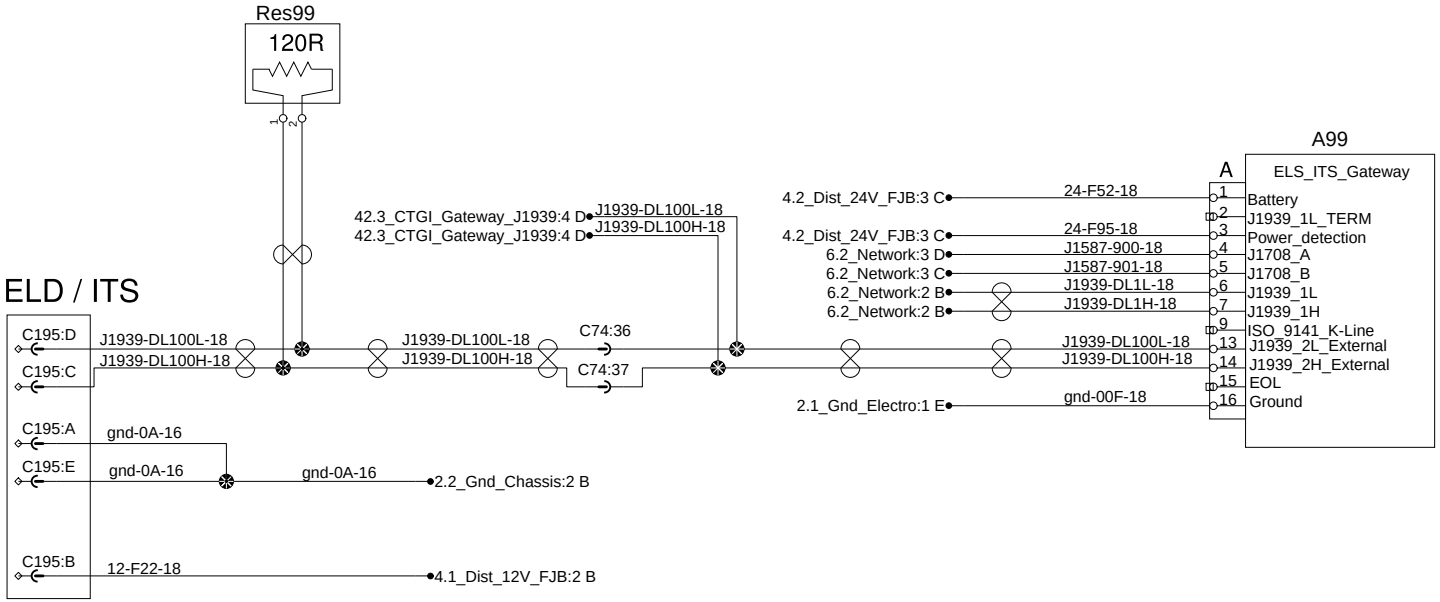

PREVOST®	WIRING DIAGRAM	No:D061640	Page:42.4	Rev:0

ELD / ITS J1939 Gateway

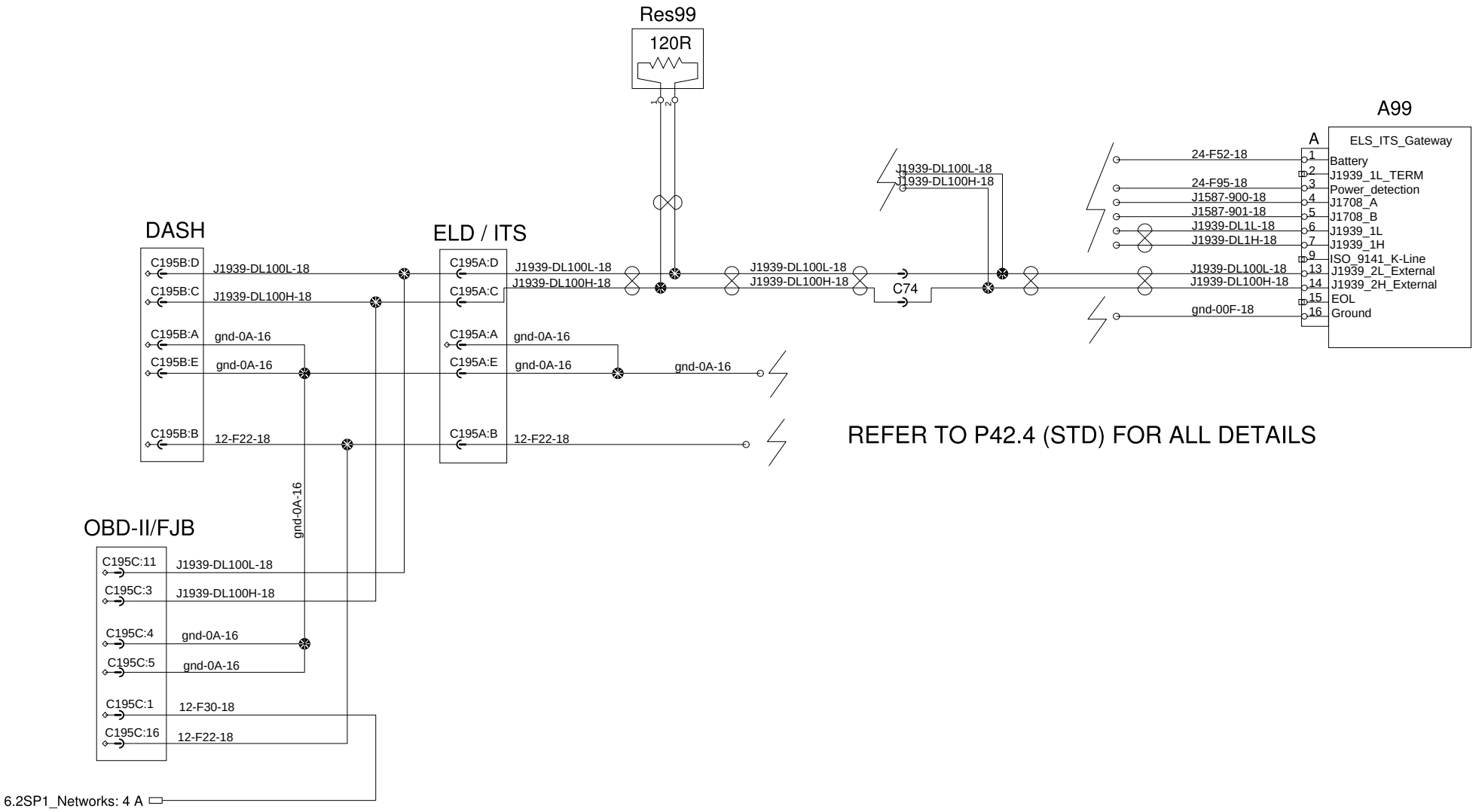

PREVOST®	WIRING DIAGRAM	No:D061640	Page:42.4 SP1	Rev:00

Surrounding Cameras System

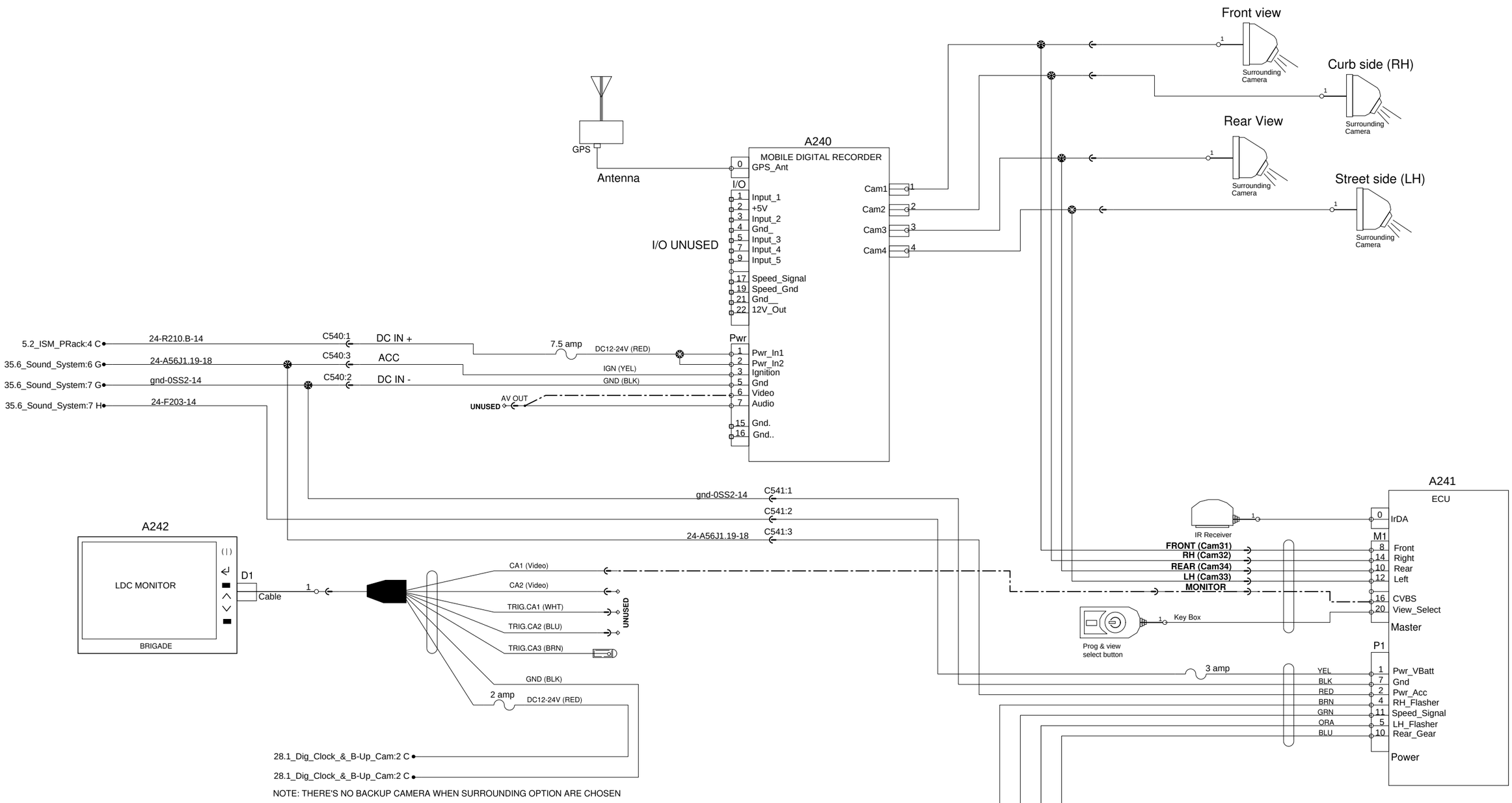

Refer to Brigade Electronics User Manual and Instructions for more details

Emergency Lights

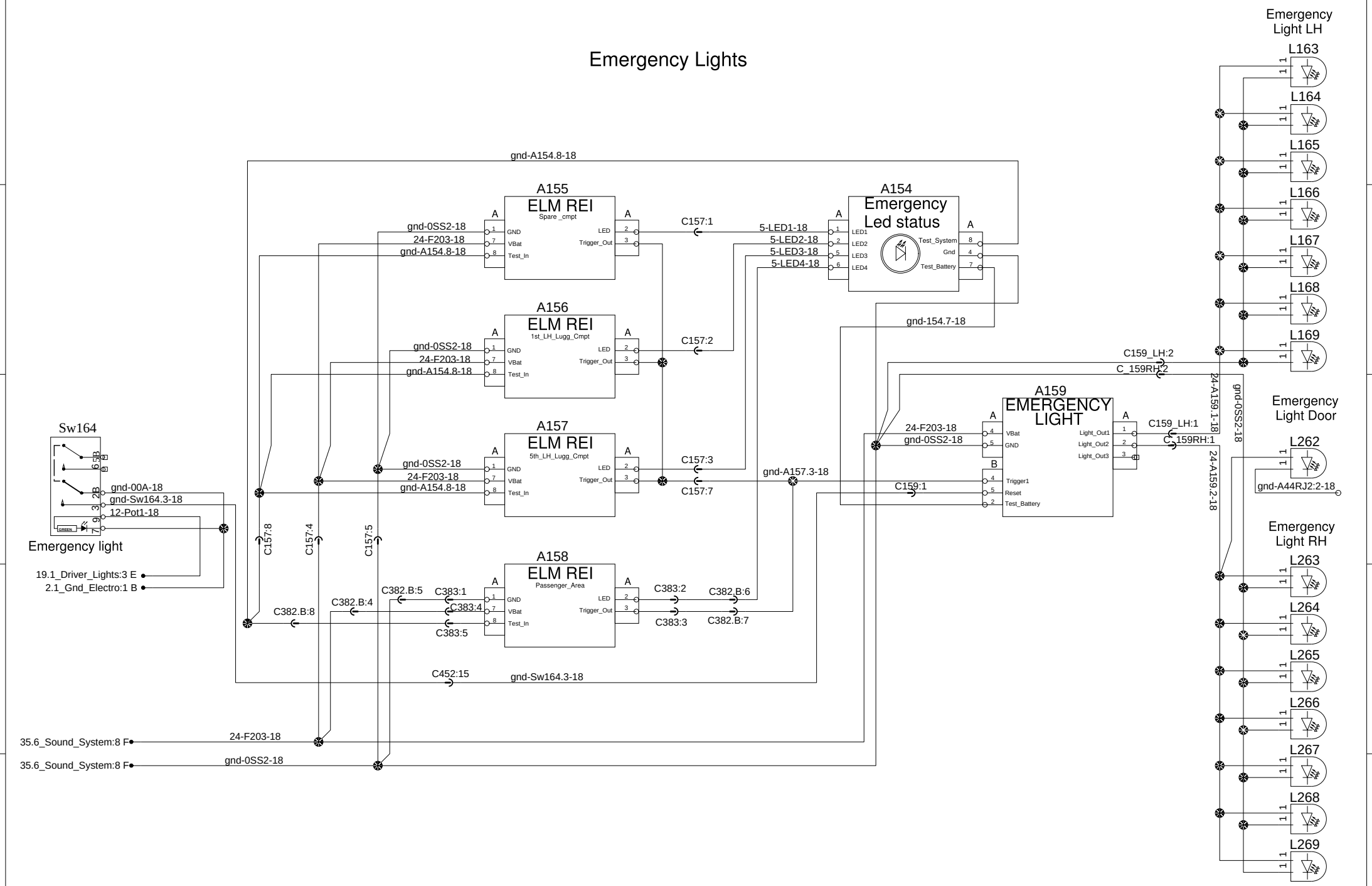

PREVOST®	WIRING DIAGRAM	No:D061640	Page:45.0	Rev:16

Emergency Lights

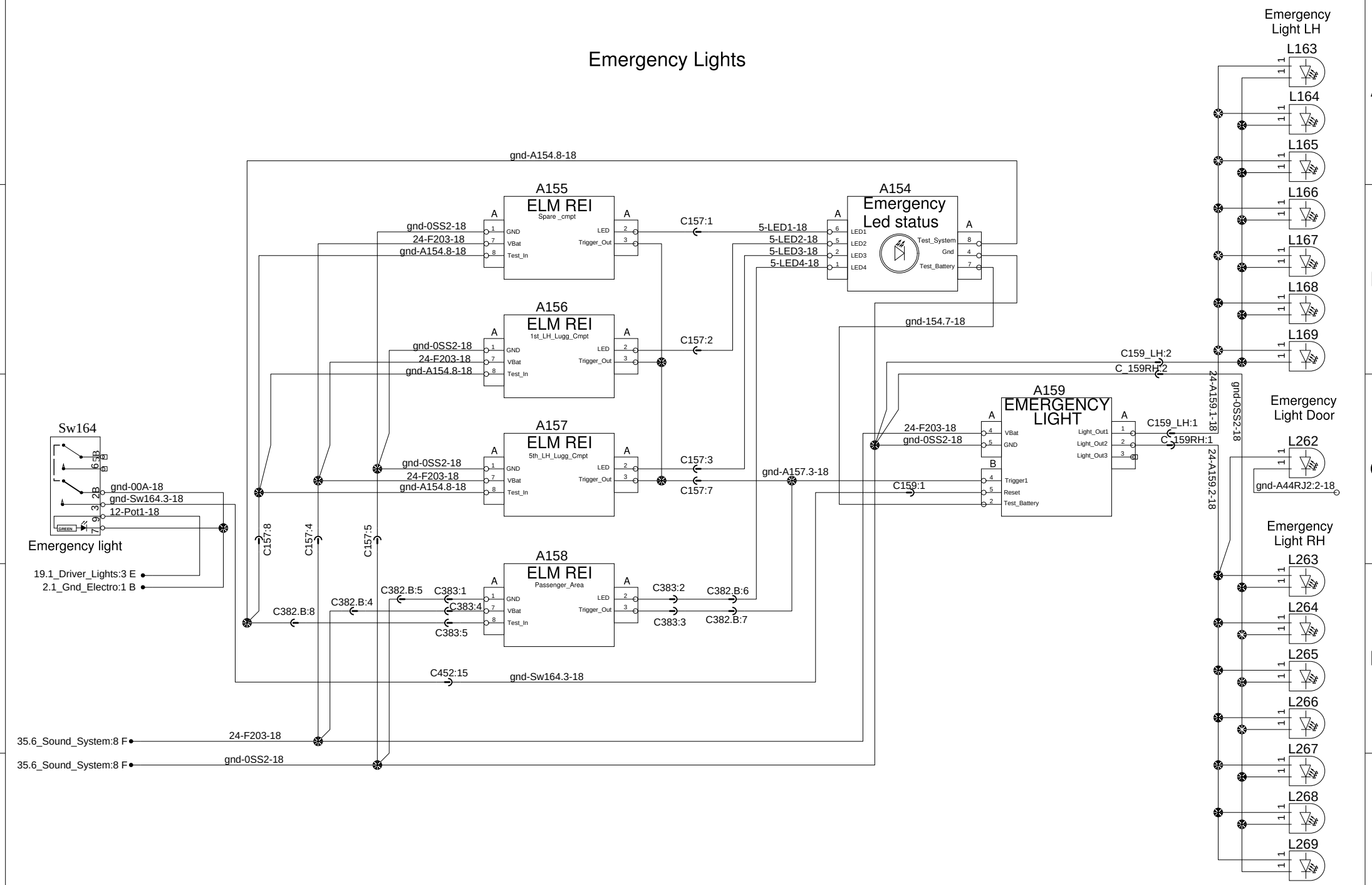

PREVOST®	WIRING DIAGRAM	No:D061640	Page:45.0	Rev:18

Customer Adaptation Dash Interface
(Central Dashboard Connector)

069920 Interconnect 'Y' are used
if there's more than one option C600A and C600B

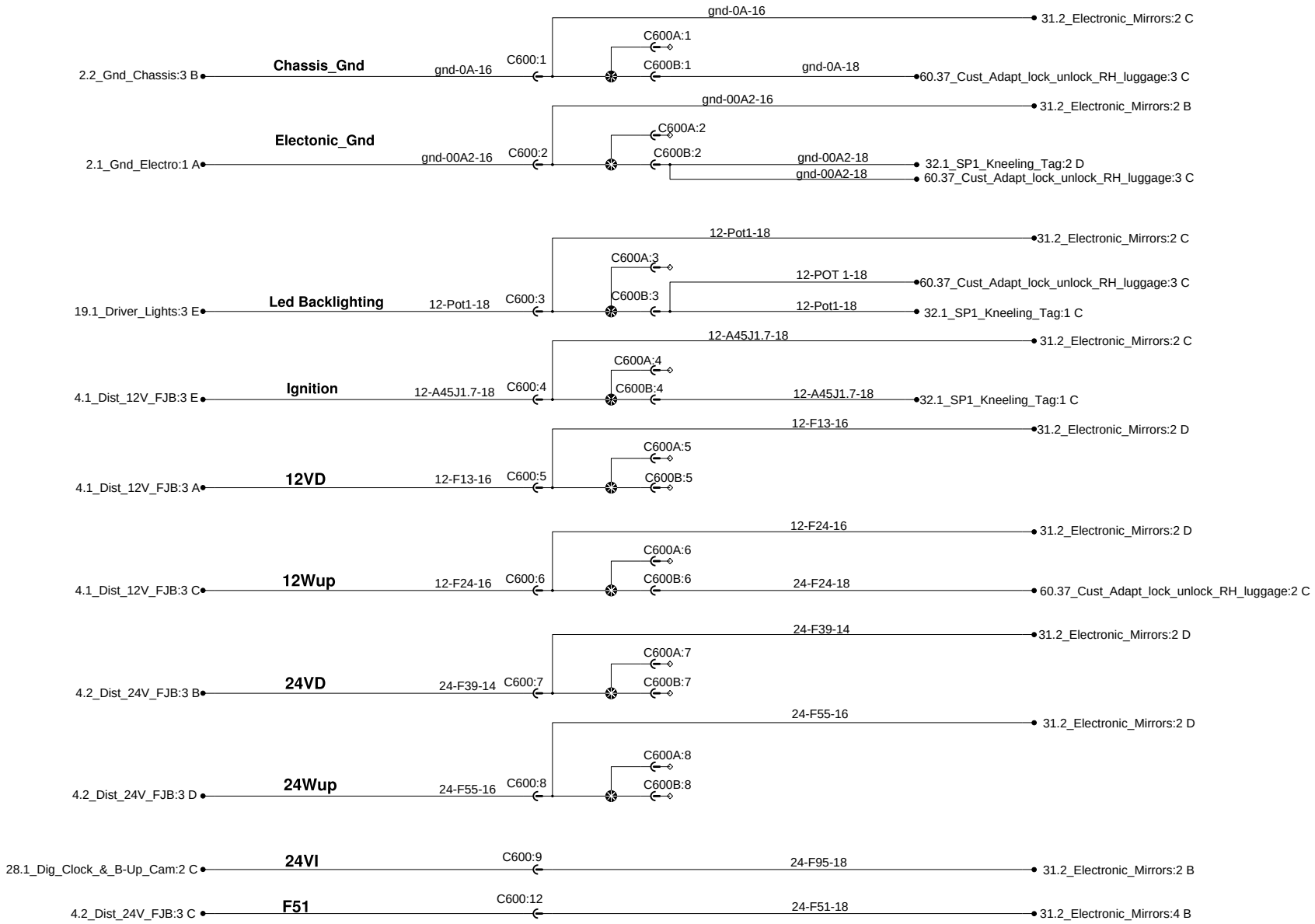

PREVOST CAR	WIRING DIAGRAM	No:D061640	Page:60.0 SP1	Rev:01

Customer Adaptation Dash Interface
(Central Dashboard Connector)

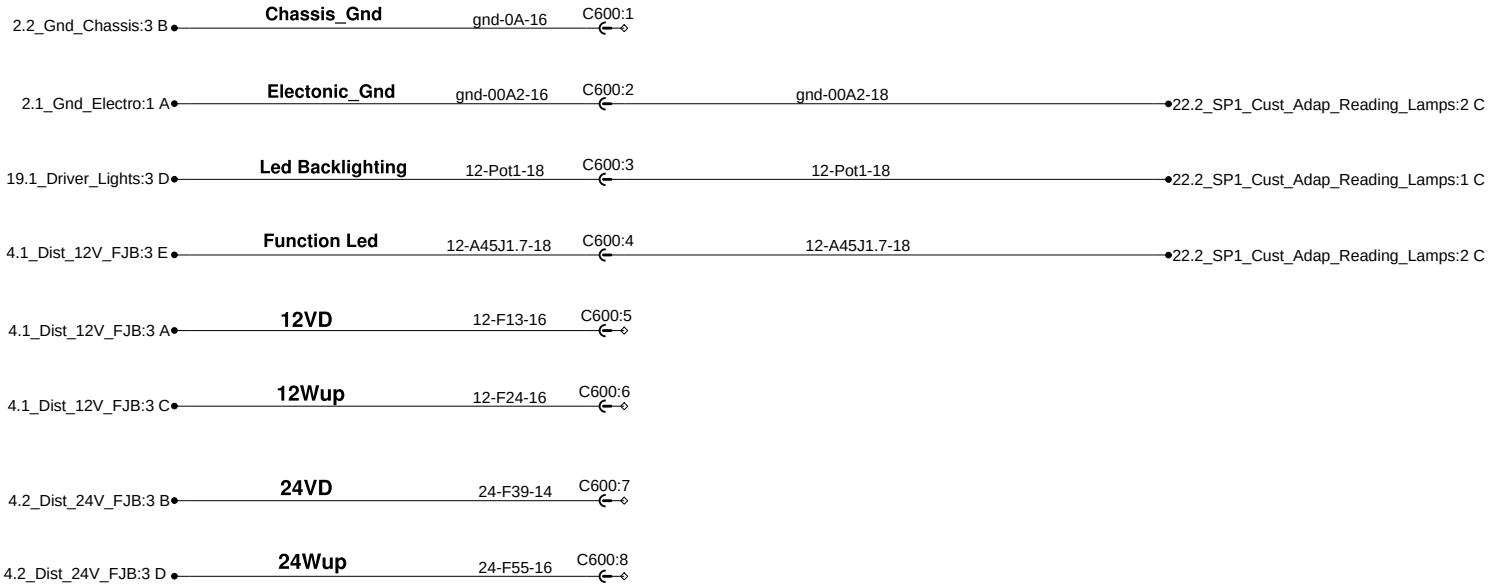

Customer Adaptation Dash Interface
(Central Dashboard Connector)

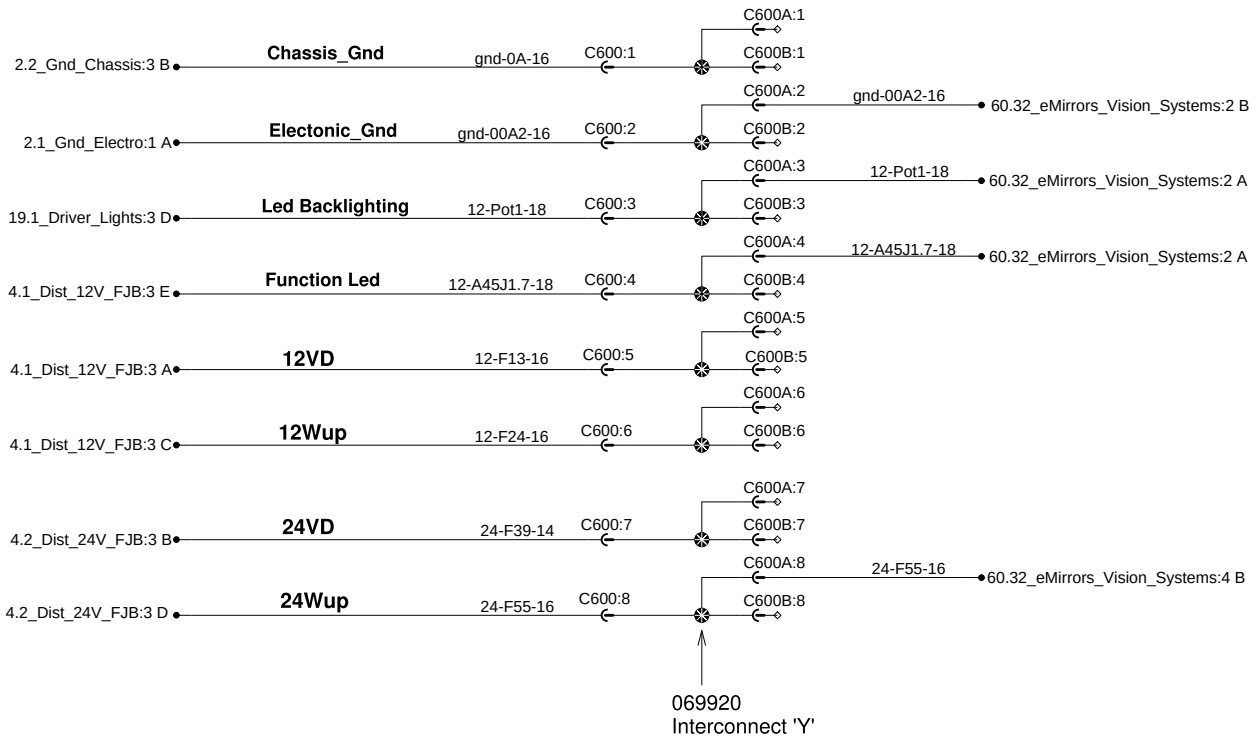

PREVOST CAR	WIRING DIAGRAM	No:D061640	Page:60.0 SP4	Rev:00

Customer Adaptation Dash Interface
(Central Dashboard Connector)

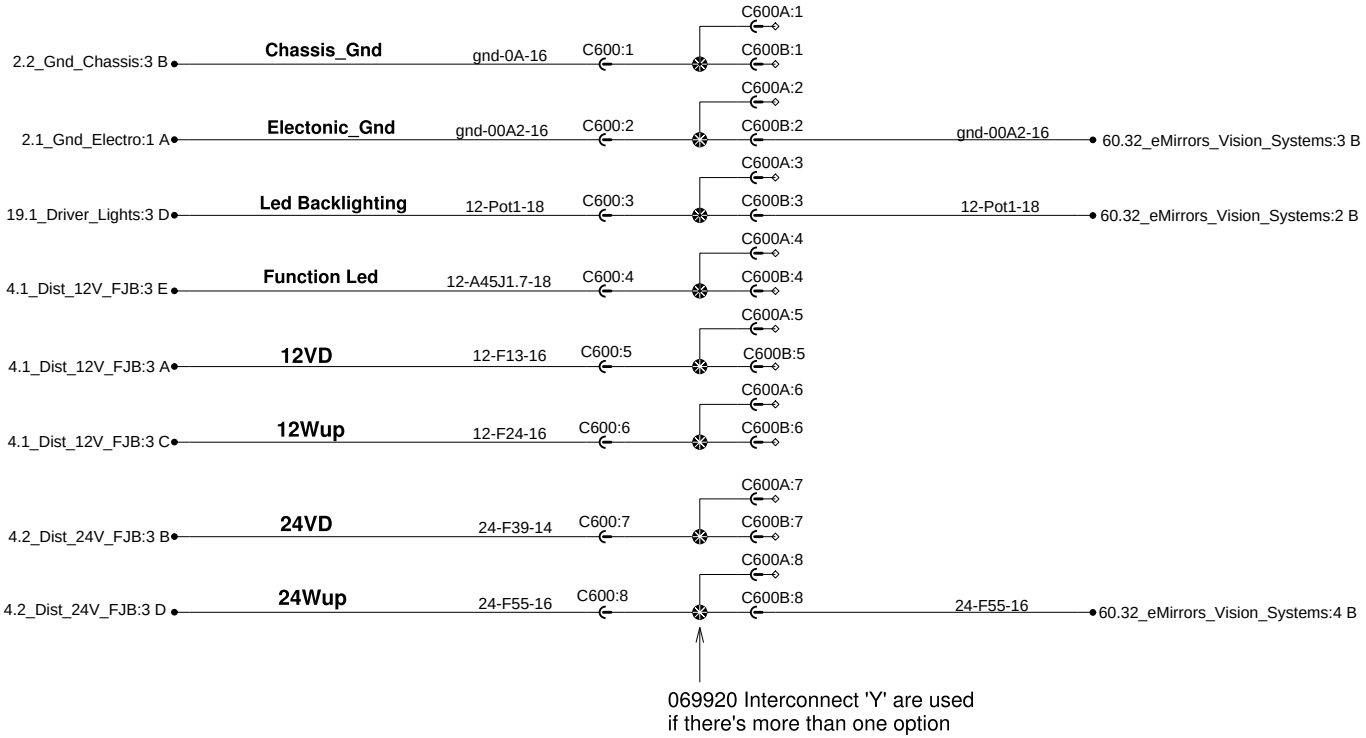

PREVOST CAR	WIRING DIAGRAM	No:D061640	Page:60.0 SP5	Rev:01

Customer Adaptation Dash Interface
(Central Dashboard Connector)

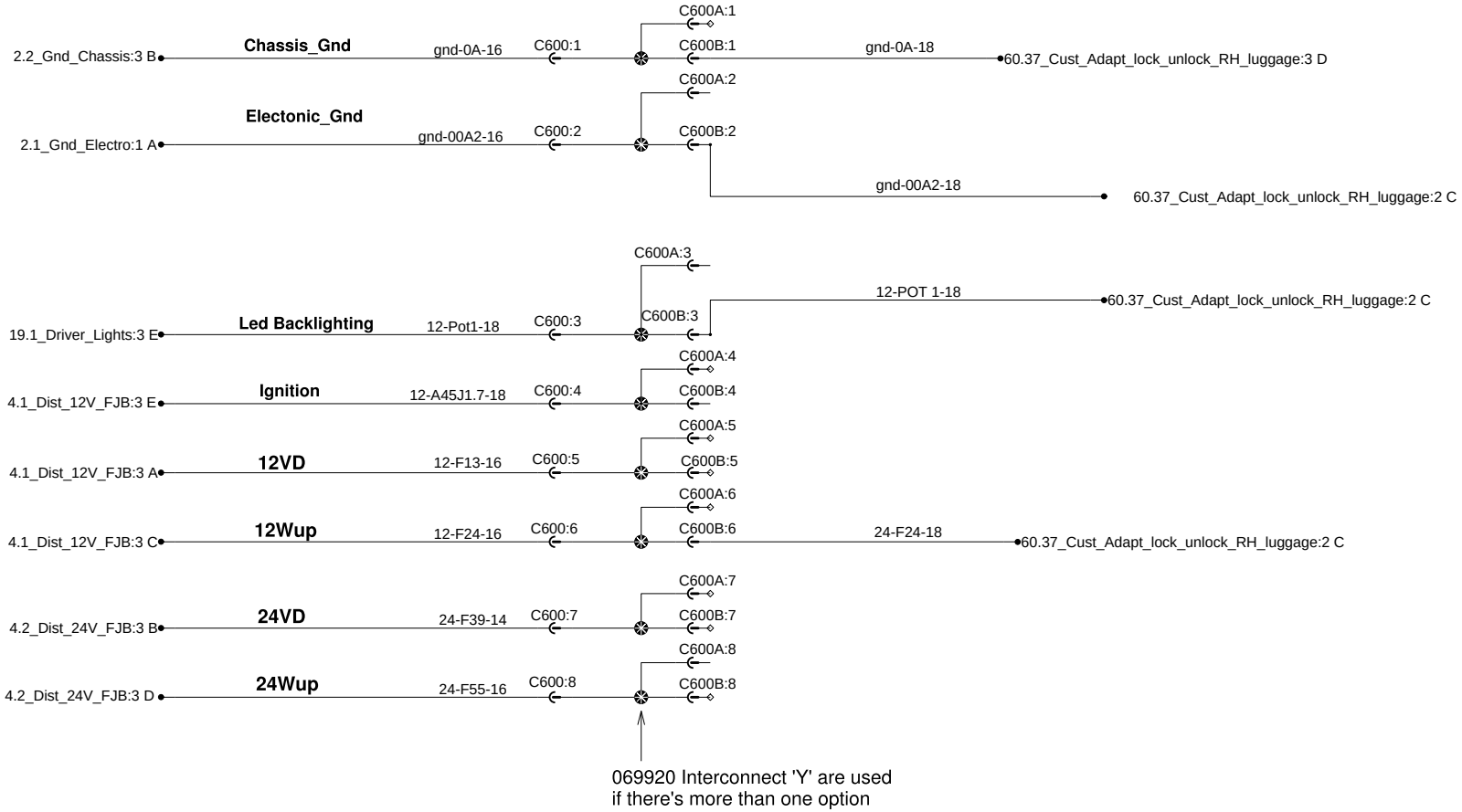

PREVOST CAR	WIRING DIAGRAM	No:D061640	Page:60.0 SP6	Rev:00

Roof Hatches with ventilation
Customer Adaptation

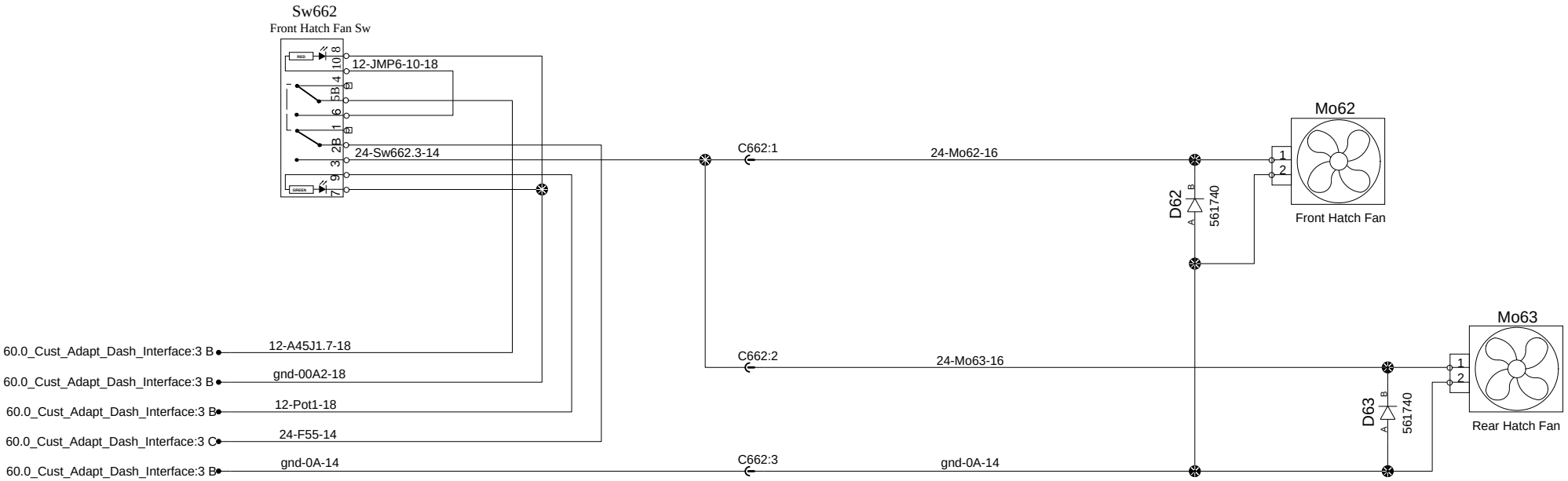

PREVOST CAR	WIRING DIAGRAM	No:D061640	Page:60.1 SP1	Rev:02

CUSTOMER ADAPTATION
MEDIA PLAYER MP-1000 (SINGLE OR DUAL)

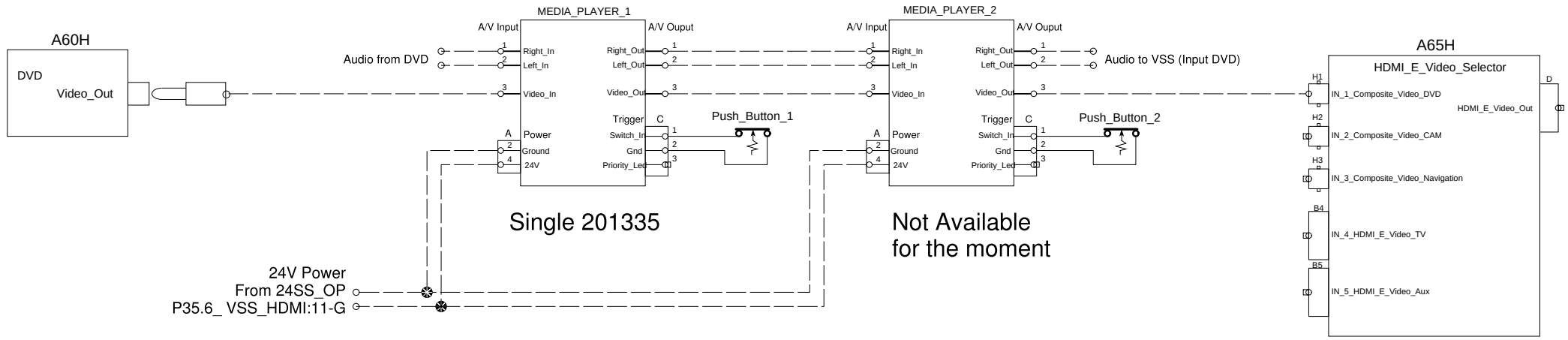

PREVOST®	WIRING DIAGRAM	No:D061640	Page:60.11 SP1	Rev:00

Snow Chains
Customer Adaptation

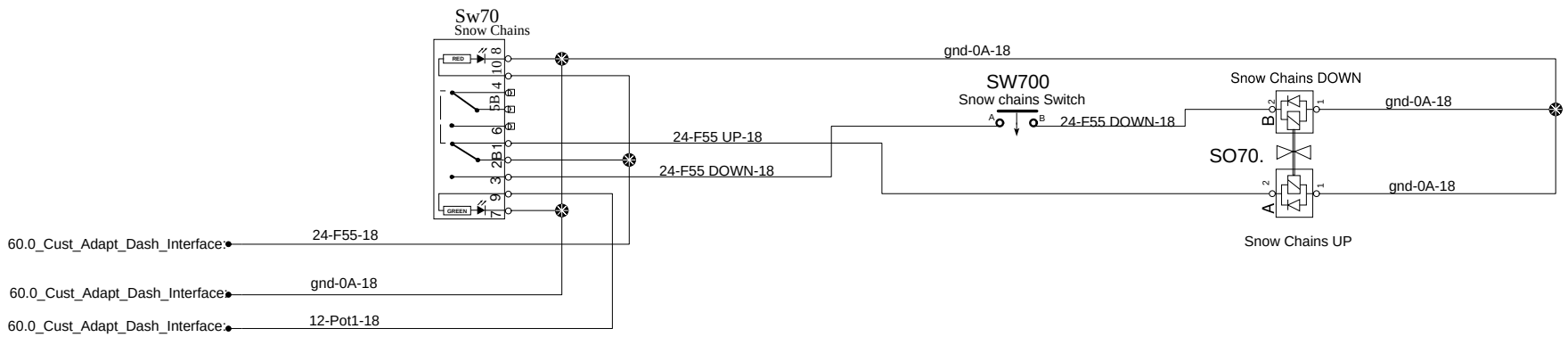

PREVOST®	WIRING DIAGRAM	No:D061640	Page:60.12	Rev:0

REI Cust. Supply REI DVR system w/ 5 cameras

Customer Adaptation

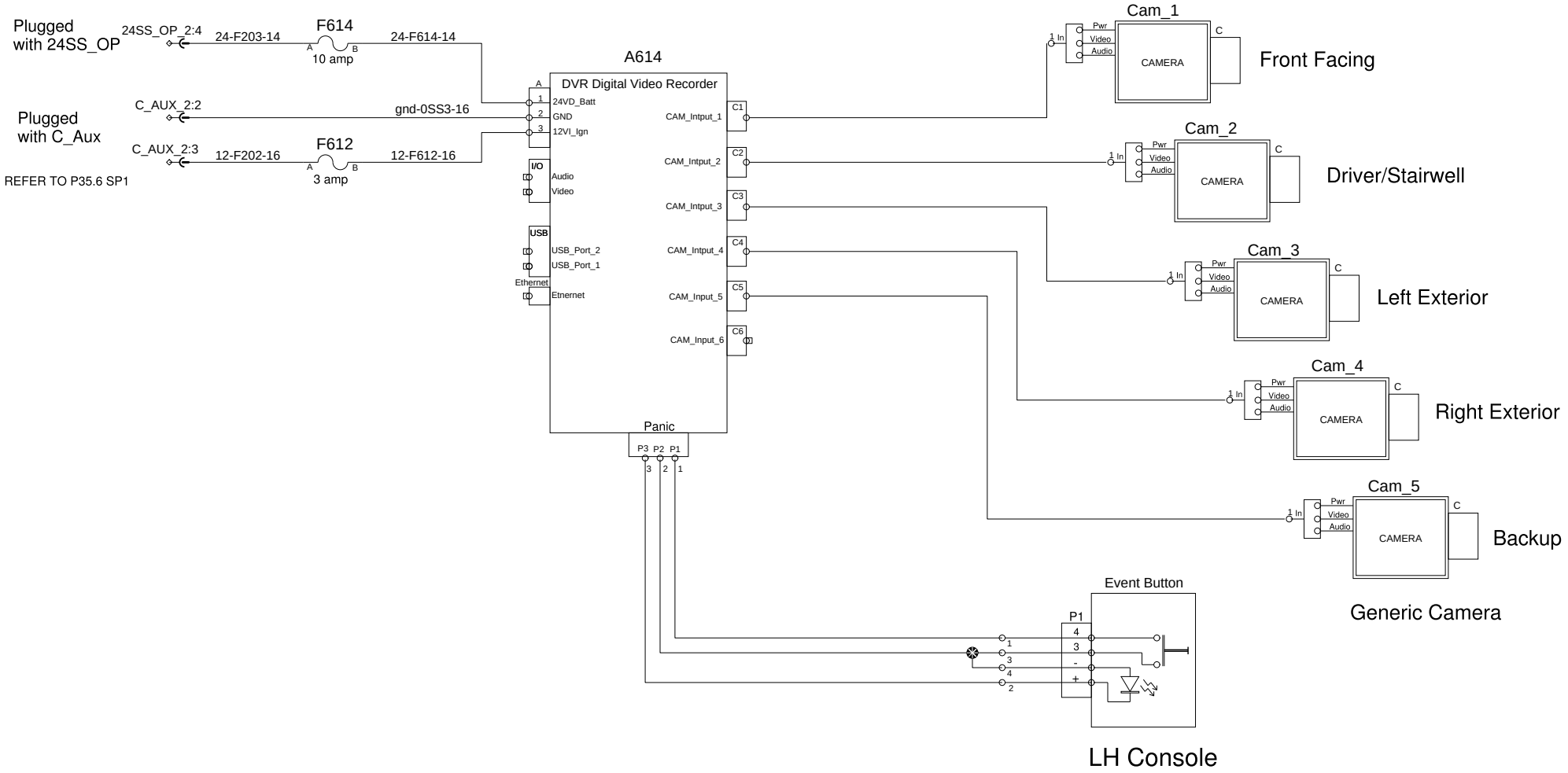

PREVOST®	WIRING DIAGRAM	No:D061640	Page:60.14 SP1	Rev:00

Water PreHeater System

Customer Adaptation Add Momentary Sw to ctrl Proheat unit

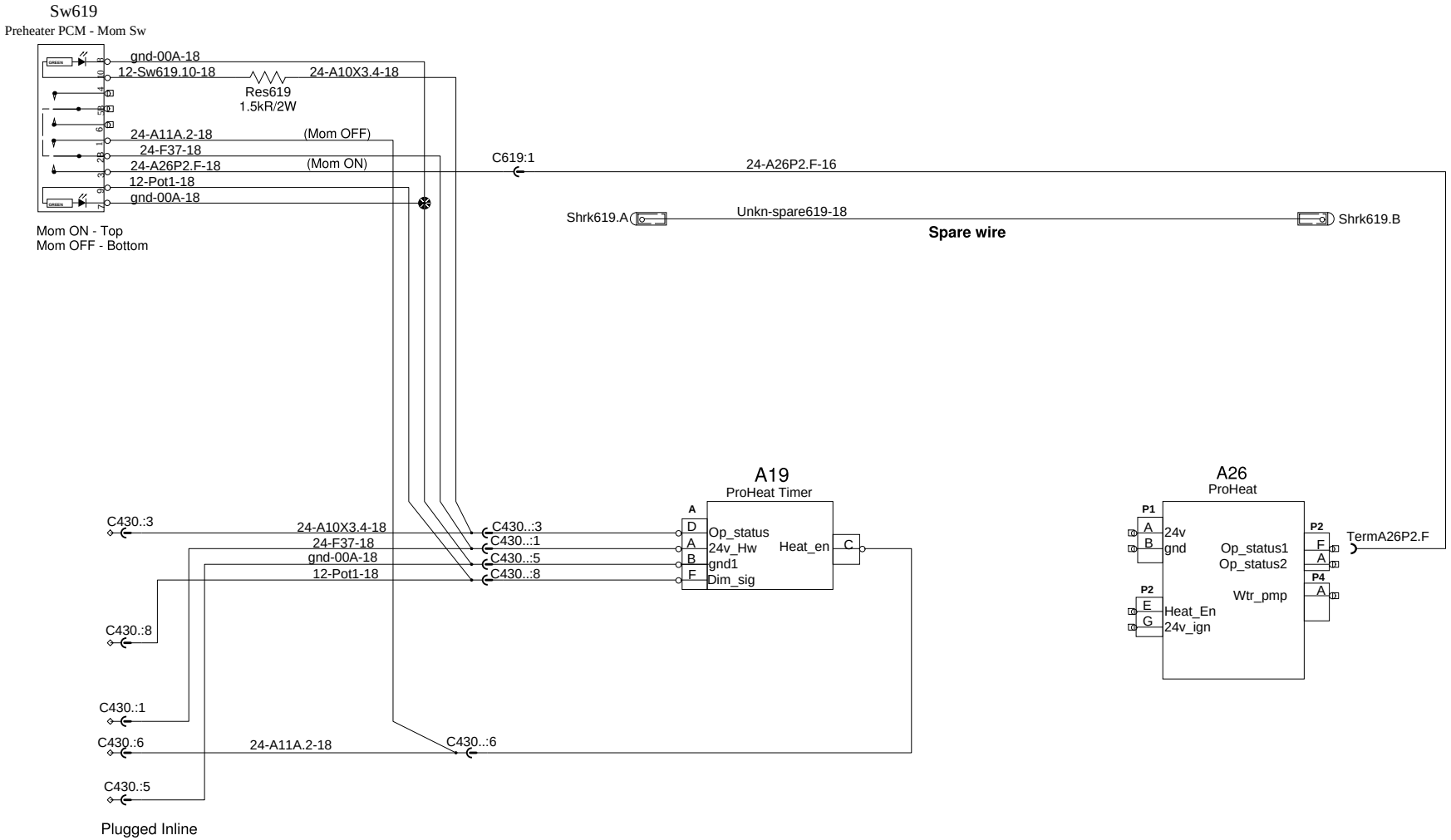

PREVOST®	WIRING DIAGRAM	No:D061640	Page:60.15SP1	Rev:01

Brigade Surrounding System 24H recording - without ISM protection
Service Only
Complementary to page 60.19 SP1

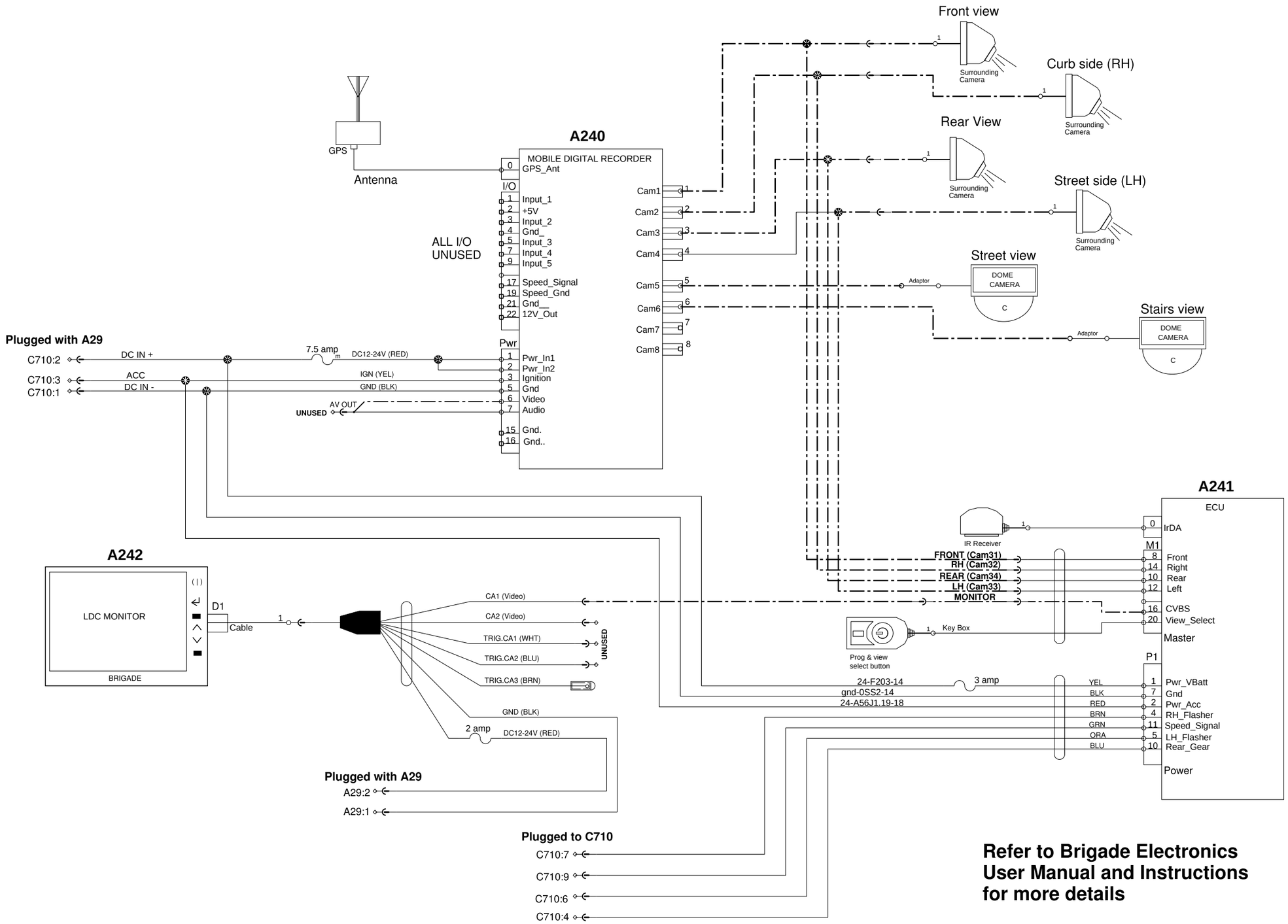

Refer to Brigade Electronics User Manual and Instructions for more details

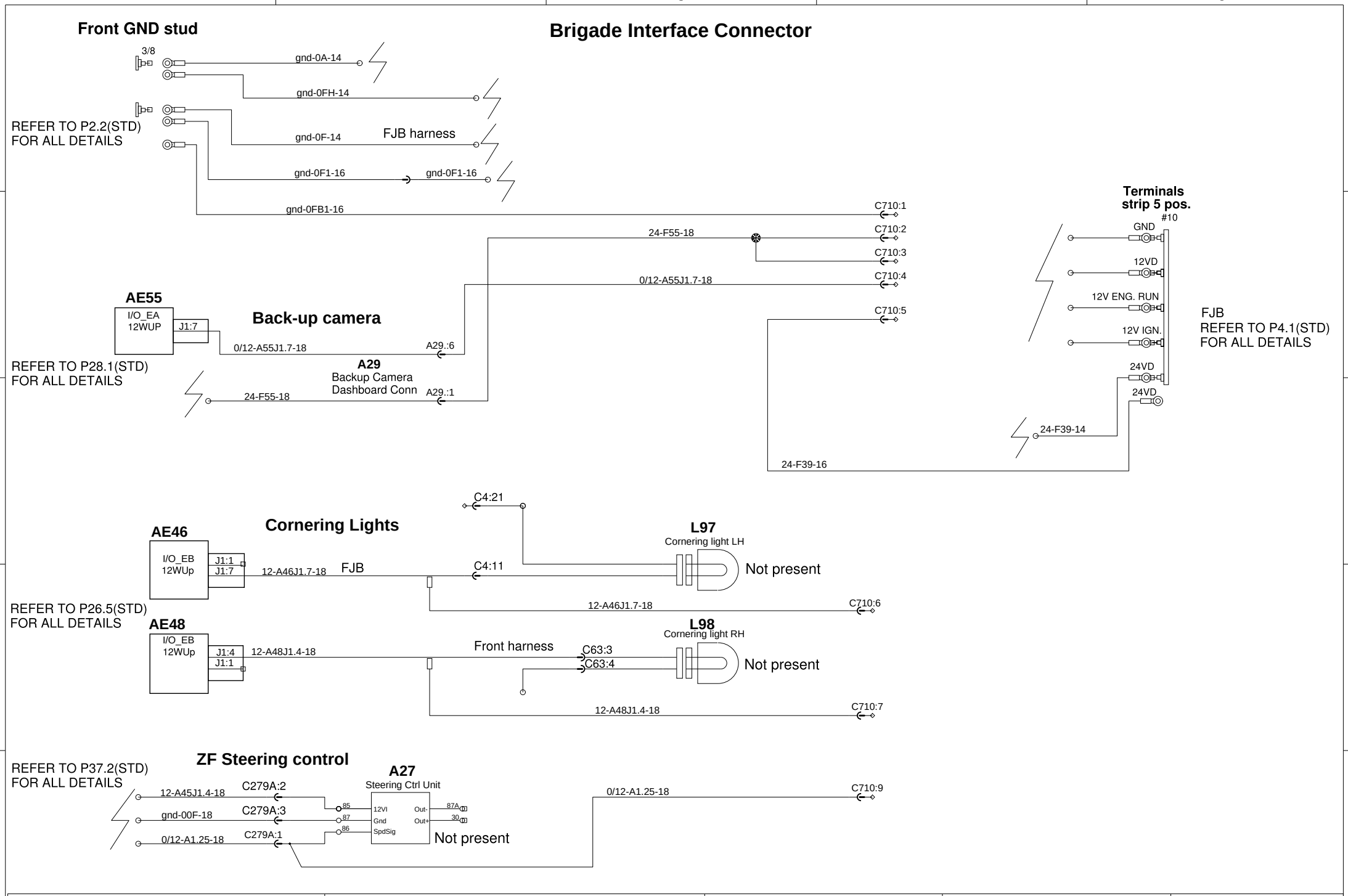

PREVOST®	WIRING DIAGRAM	No:D061640	Page:60.19 SP1	Rev:01

Additional Aisle Lighting
Customer Adaptation

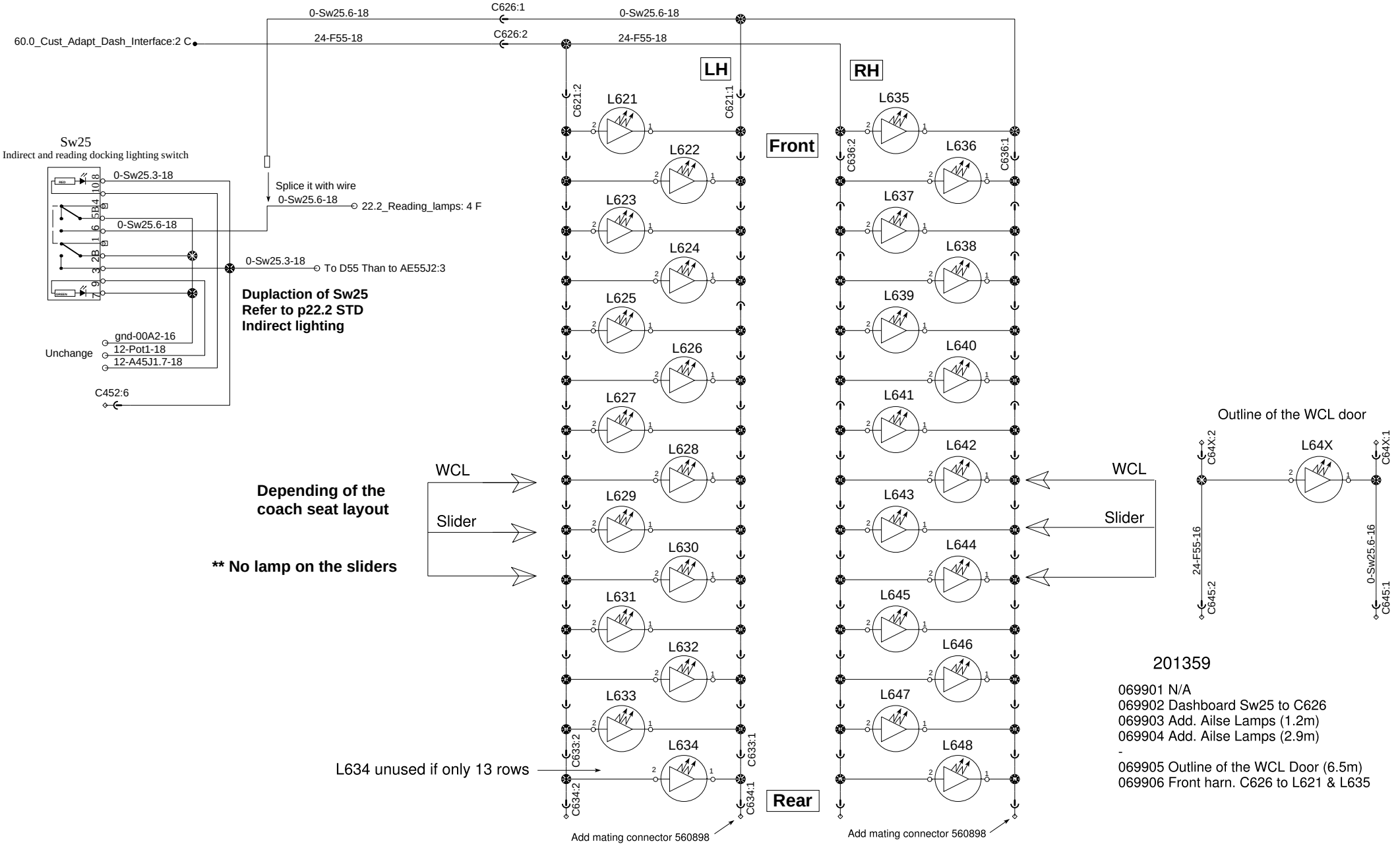

PREVOST®	WIRING DIAGRAM	No:D061640	Page:60.20 SP1	Rev:00

4th Alternator

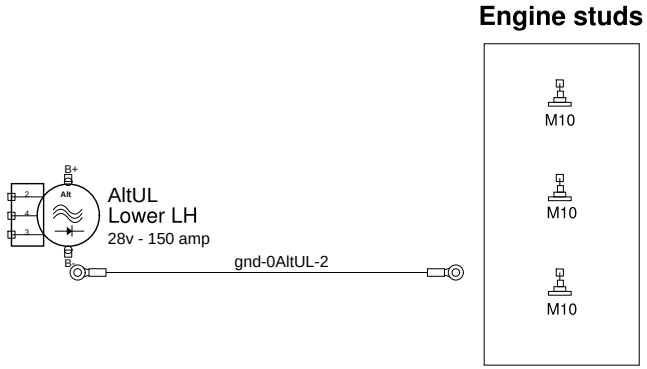

12V Internet Sw. on dashboard

CUSTOMER ADAPTATION

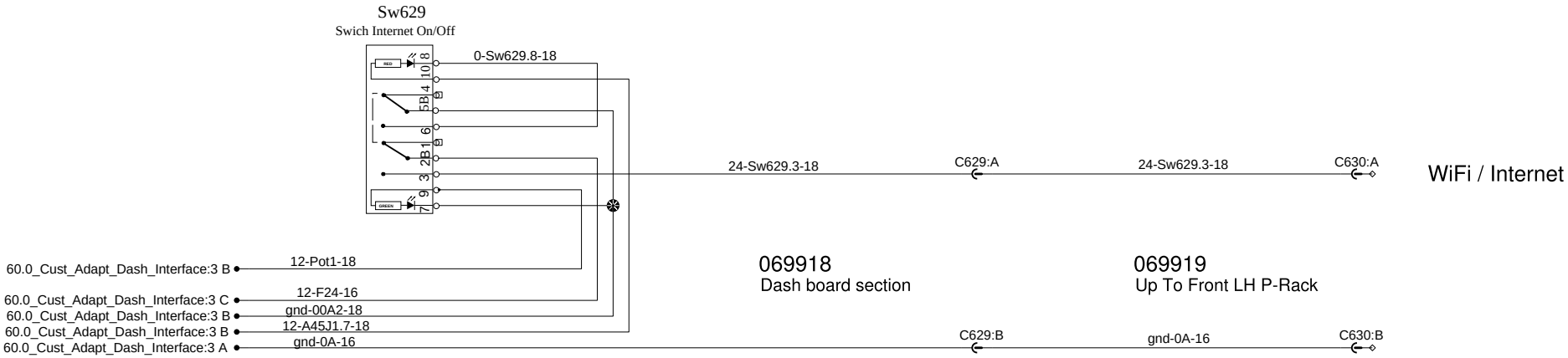

PREVOST®	WIRING DIAGRAM	No:D061640	Page:60.22 SP1	Rev:00

Mobile Digital Video Recorders (DVR)

Customer Adaptation

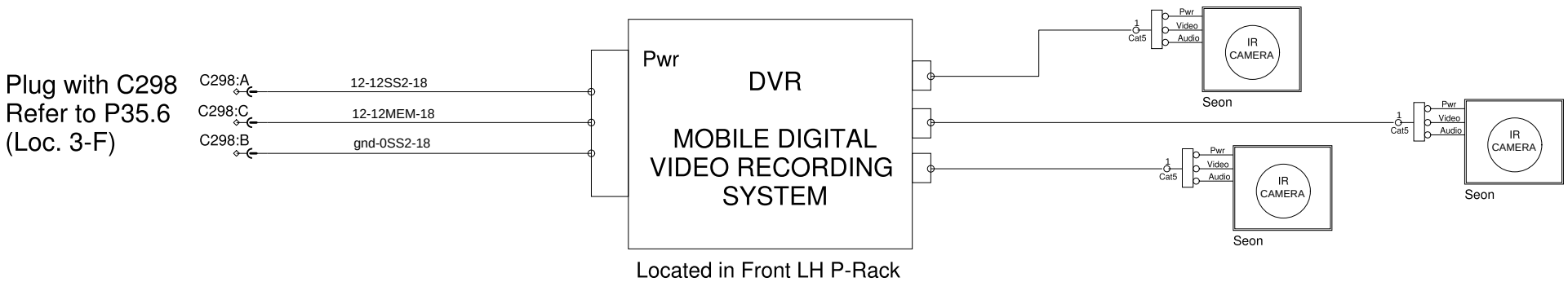

PREVOST®	WIRING DIAGRAM	No:D061640	Page:60.24 SP1	Rev:00

Lavatory Smoke Detector
Customer Adaptation

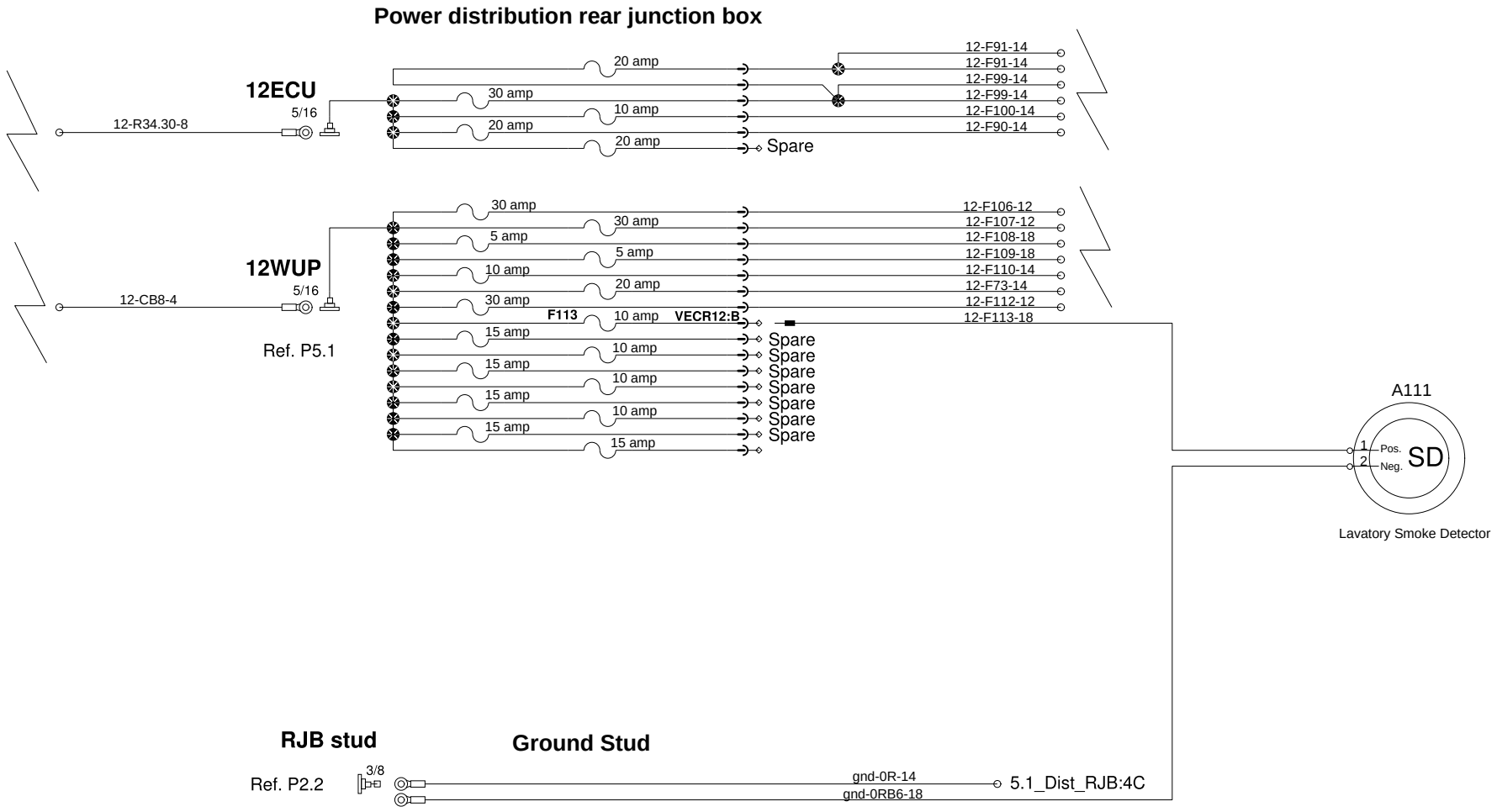

PREVOST®	WIRING DIAGRAM	No:D061640	Page:60.25 SP1	Rev:00

Customer Adapation - Rear Galley

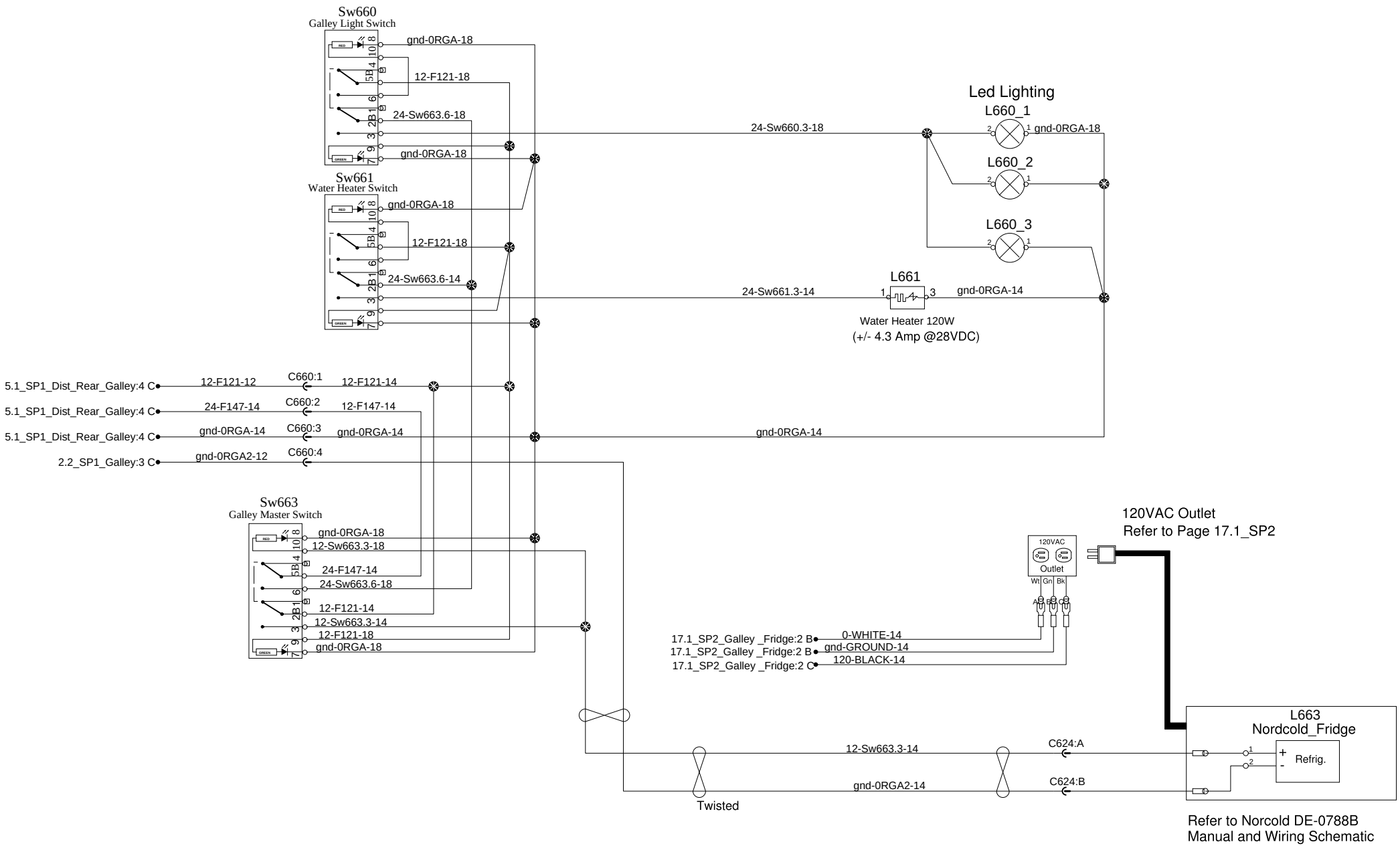

PREVOST®	WIRING DIAGRAM	No:D061640	Page:60.30 SP1	Rev:00

Electronic Mirrors (eMirrors)

Customer Adapation

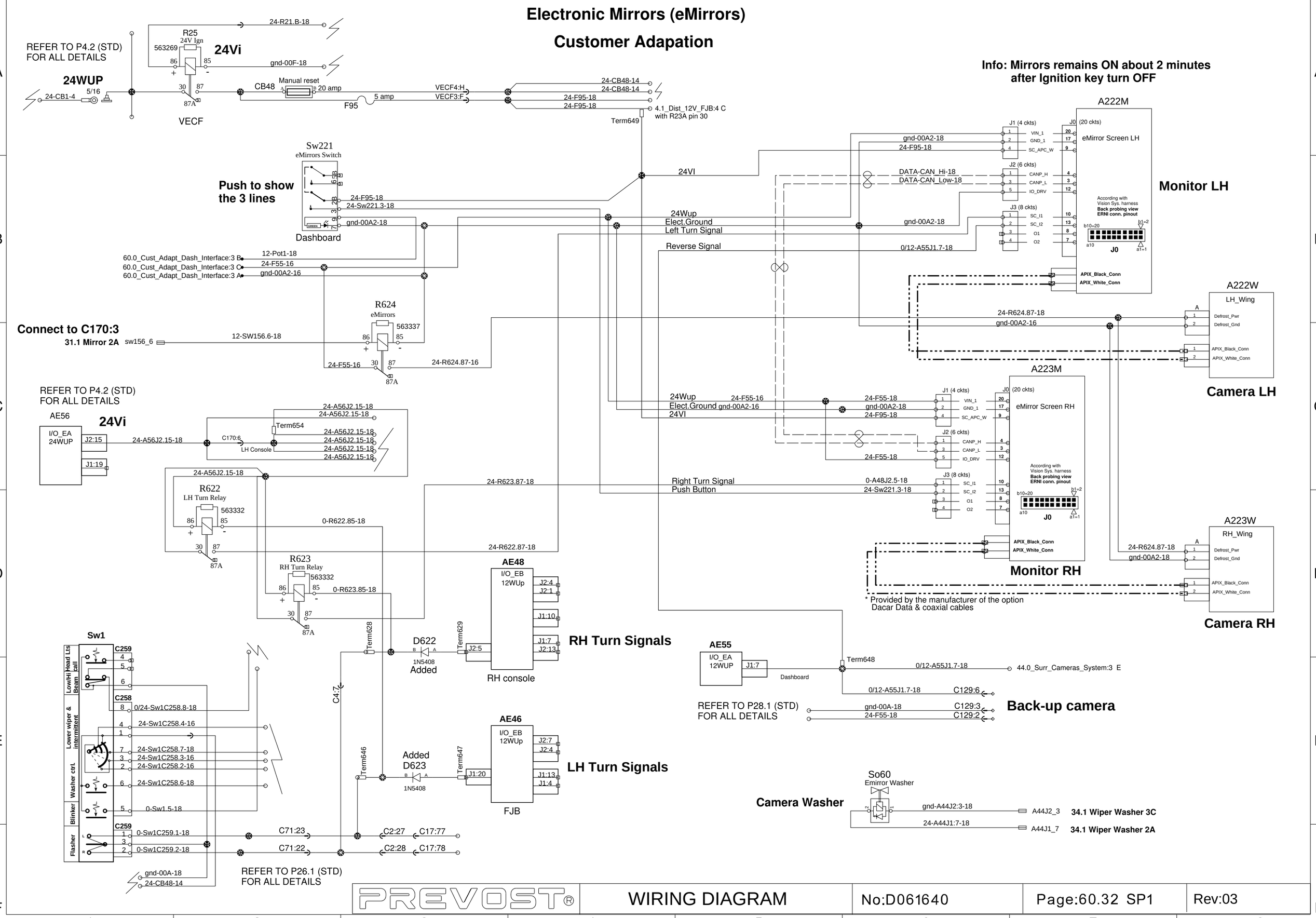

PREVOST®	WIRING DIAGRAM	No:D061640	Page:60.32 SP1	Rev:03

Customer Adaptation - WIFI System Option
VTC ICR-2

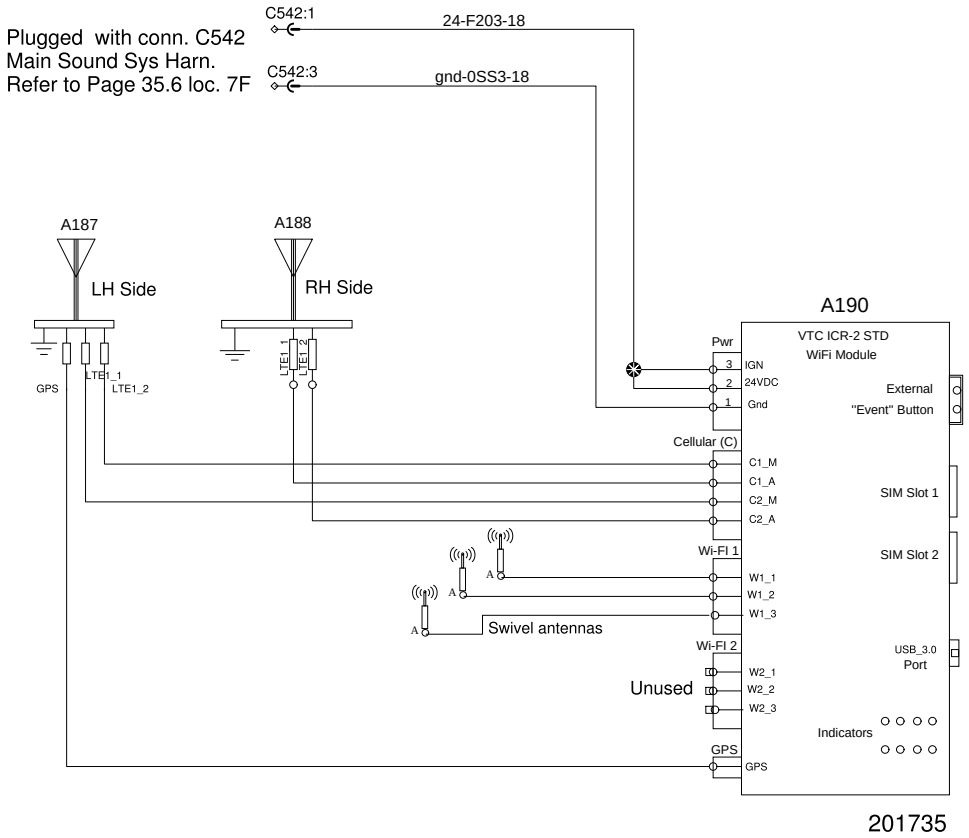

REFER TO ICOMERA INSTRUCTIONS & MANUAL
NEXCOM VTC ICR-2 STANDARD US AT&T

Customer Adaptation
TV Satellite Option

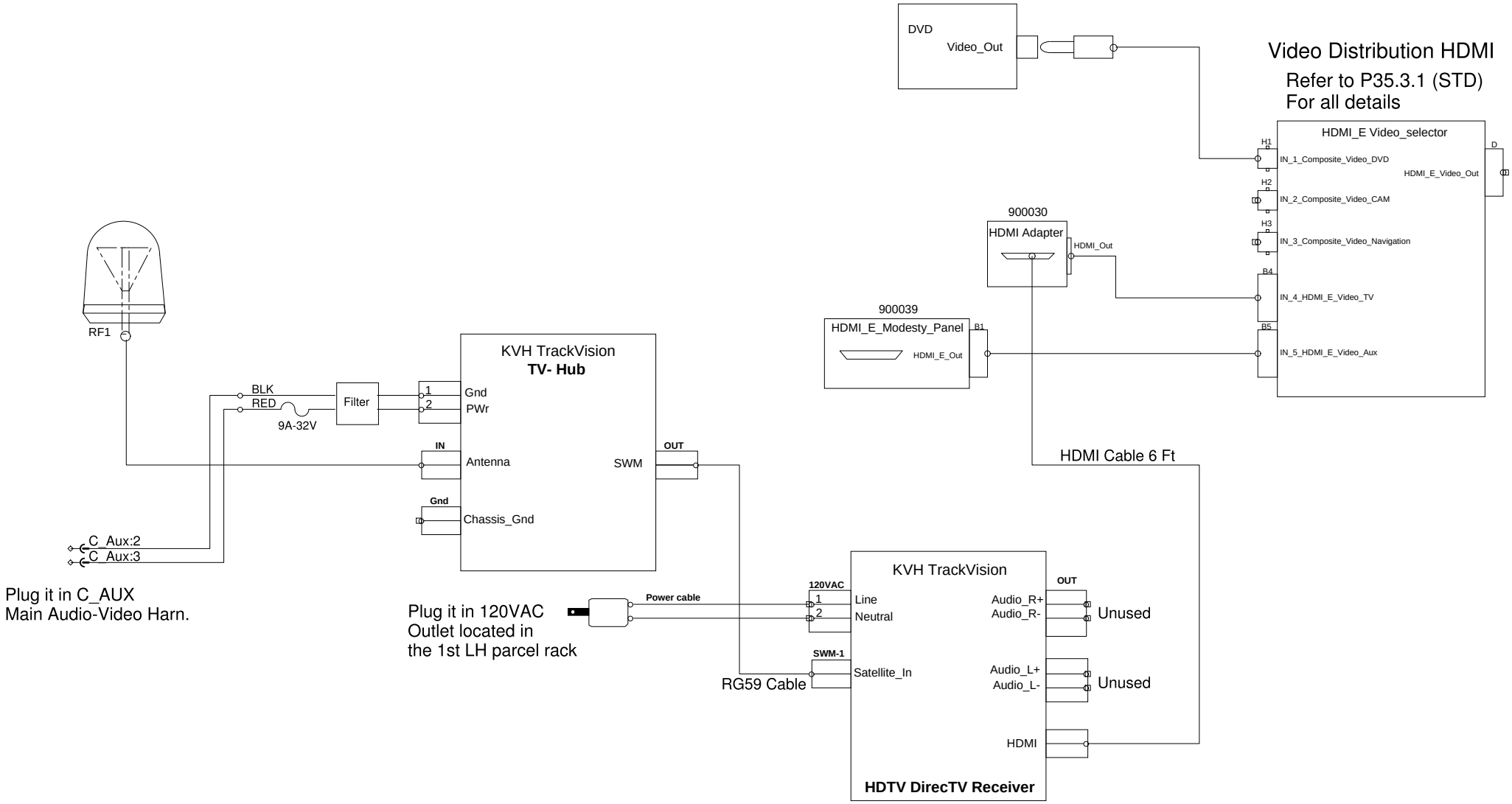

PREVOST®	WIRING DIAGRAM	No:D061640	Page:60.35 SP1	Rev:00

Customer Adaptation - ELD Omnitracs XRS
Fleet Management & Logging device

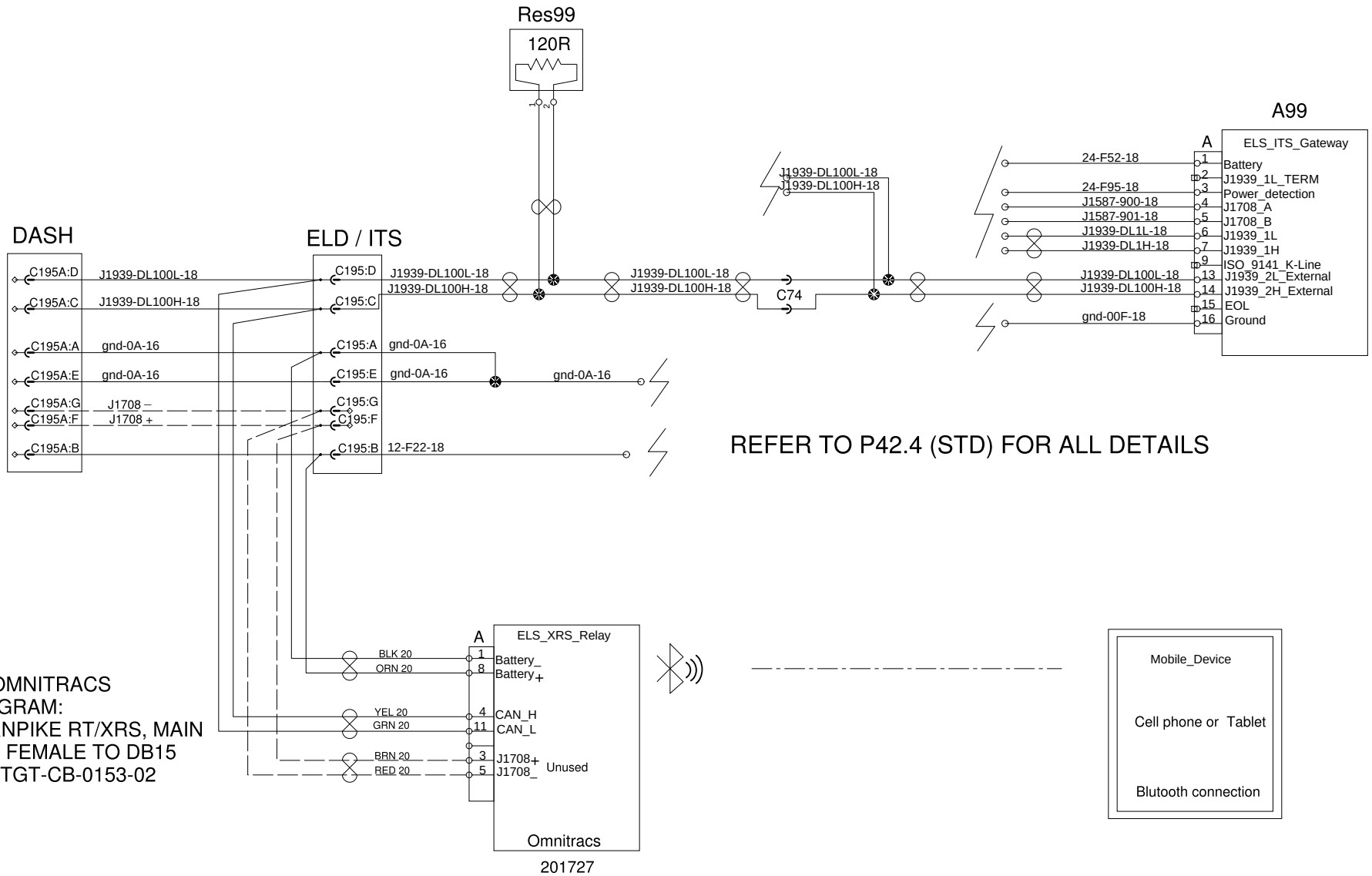

REFER TO OMNITRACS
WIRING DIAGRAM:
CABLE, TURNPIKE RT/XRS, MAIN
9-PIN MALE, FEMALE TO DB15
DRAWING DTGT-CB-0153-02

PREVOST®	WIRING DIAGRAM	No:D061640	Page:60.36 SP1	Rev:00

lock unlock RH luggage door

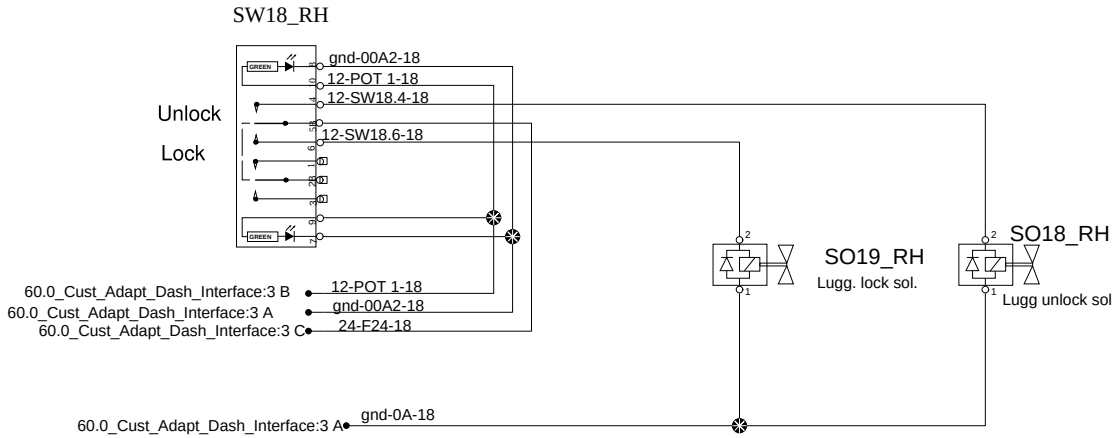

PREVOST®	WIRING DIAGRAM	No:D061640	Page:60.37SP1	Rev:00

Forward collision warning

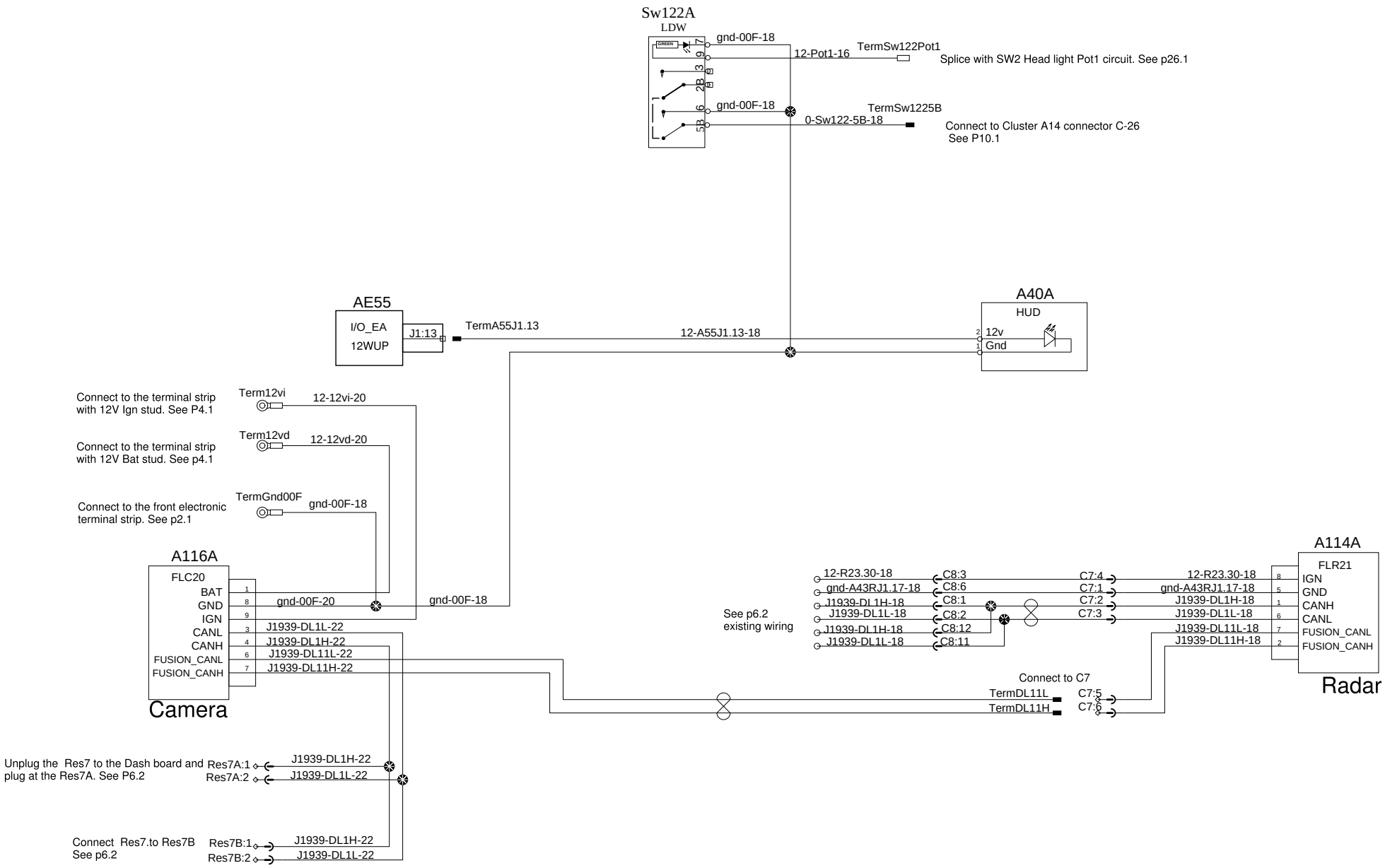

PREVOST®	WIRING DIAGRAM	No:D061640	Page:60.38SP1	Rev:2

Plasma Cluster Prevost X3 Series

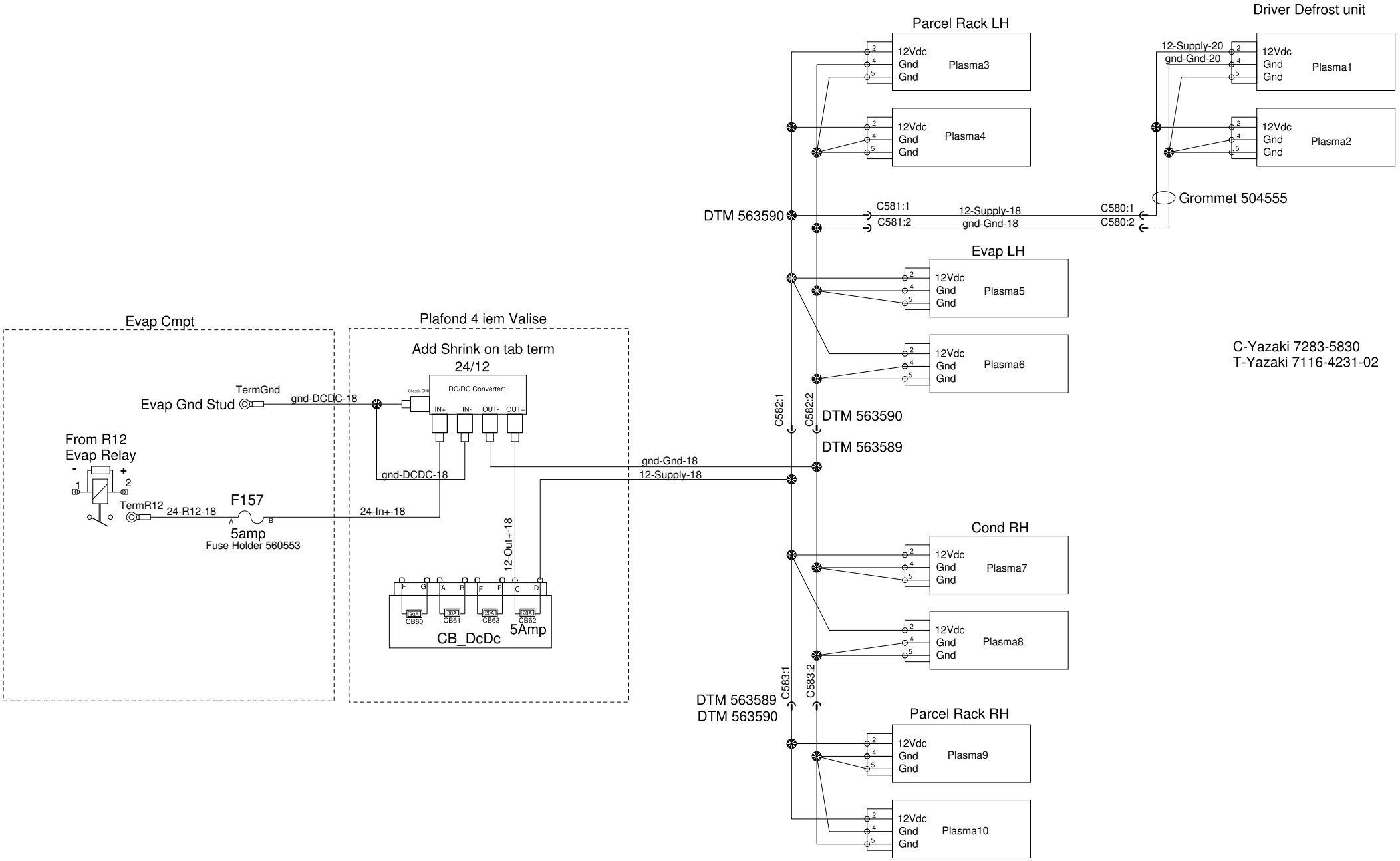

PREVOST®	WIRING DIAGRAM	No: D061550	Page: 60.39SP1	Rev: 01

Audio Video System HDMI
Customer Adaptation Additional DVD

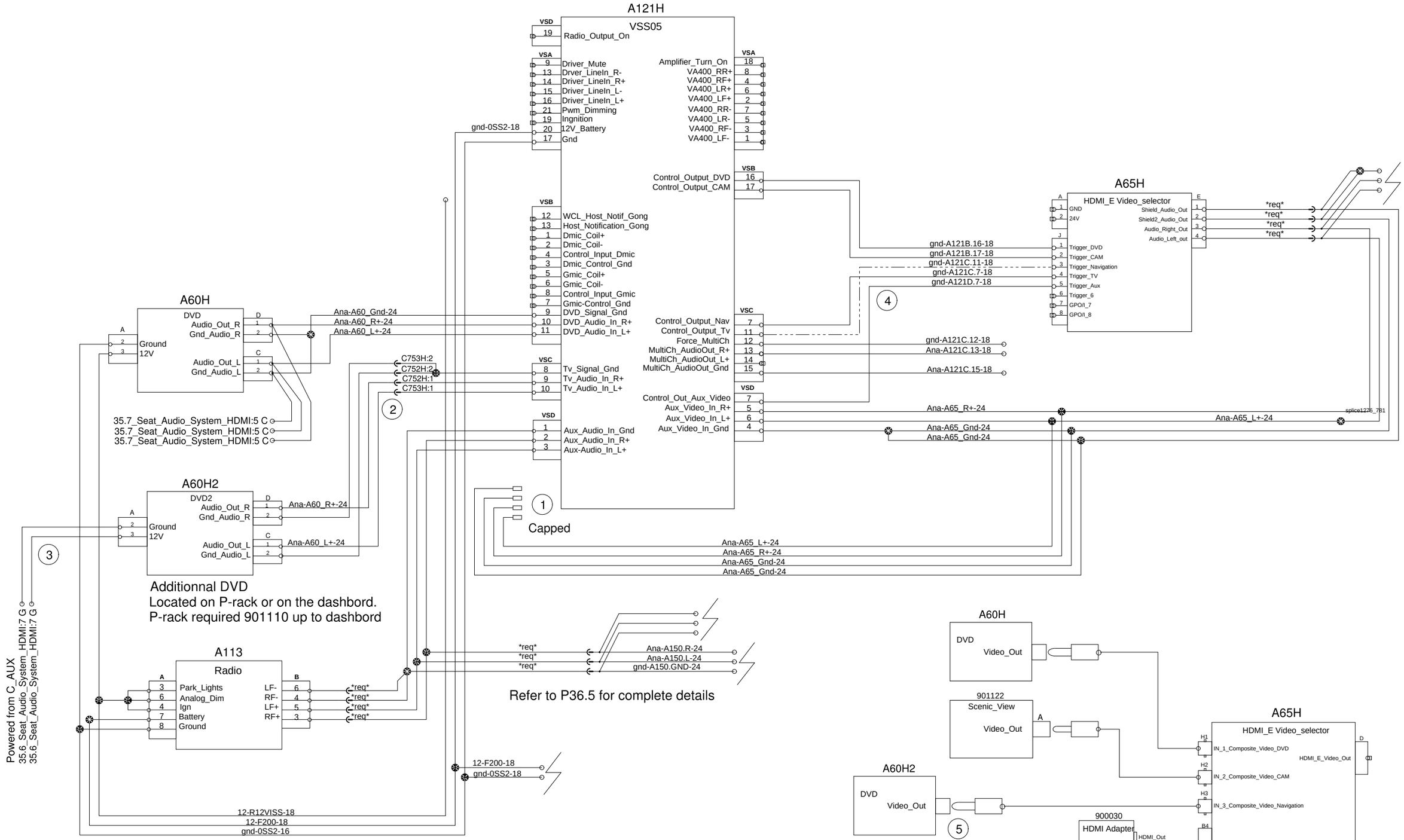

Installation and modification:

1. Unplug Male RCA A65_L,A65_R, A65_Gnd from C752 & 753 and add 2x 507661 Cap
2. Plug A60H2 (DVD2) Audio outputs on RCA plugs C752 & C753 (ocated on the dashboard)
3. Plug 12V Power from C_Aux
4. Invert Pin J3 and J4 on video selector A65H
5. Plug A60H2 (DVD2) Video output to A65H Input H3

PREVOST®	WIRING DIAGRAM	No:D061640	Page:60.5 SP1	Rev:00

Customer Adaptation - WIFI System Option

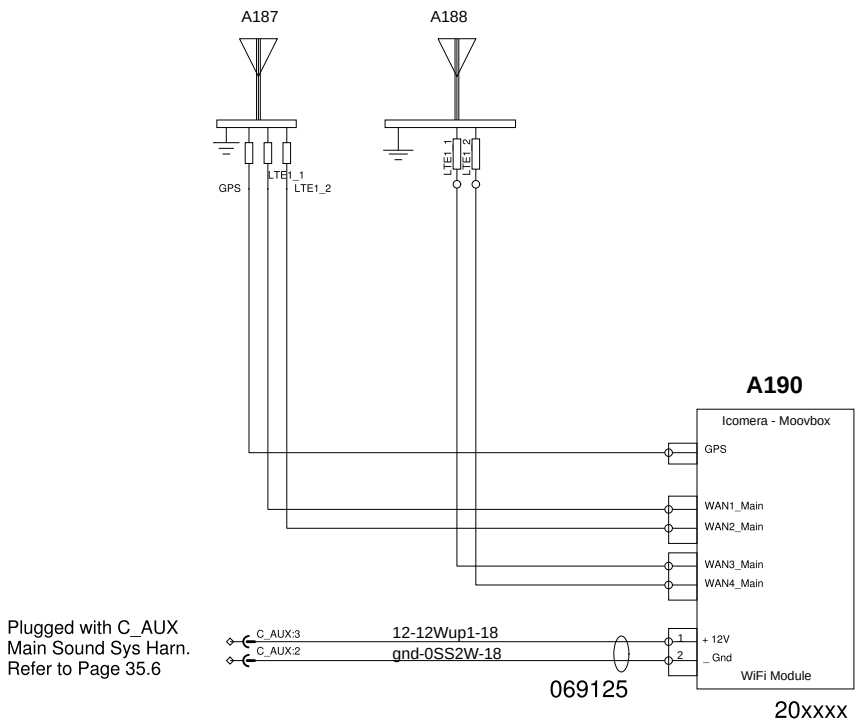

Moovbox M3X0

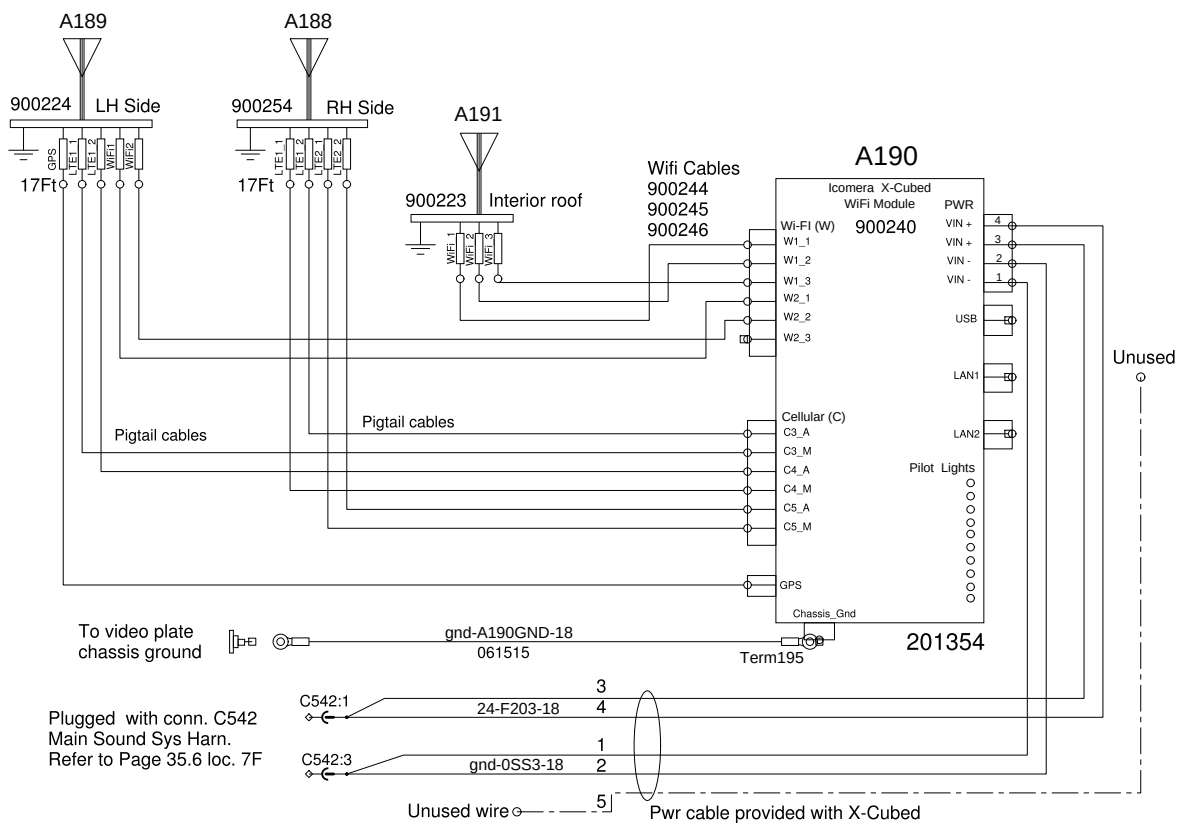

X-Cubed

Marker and FLasher Lights Additionnal
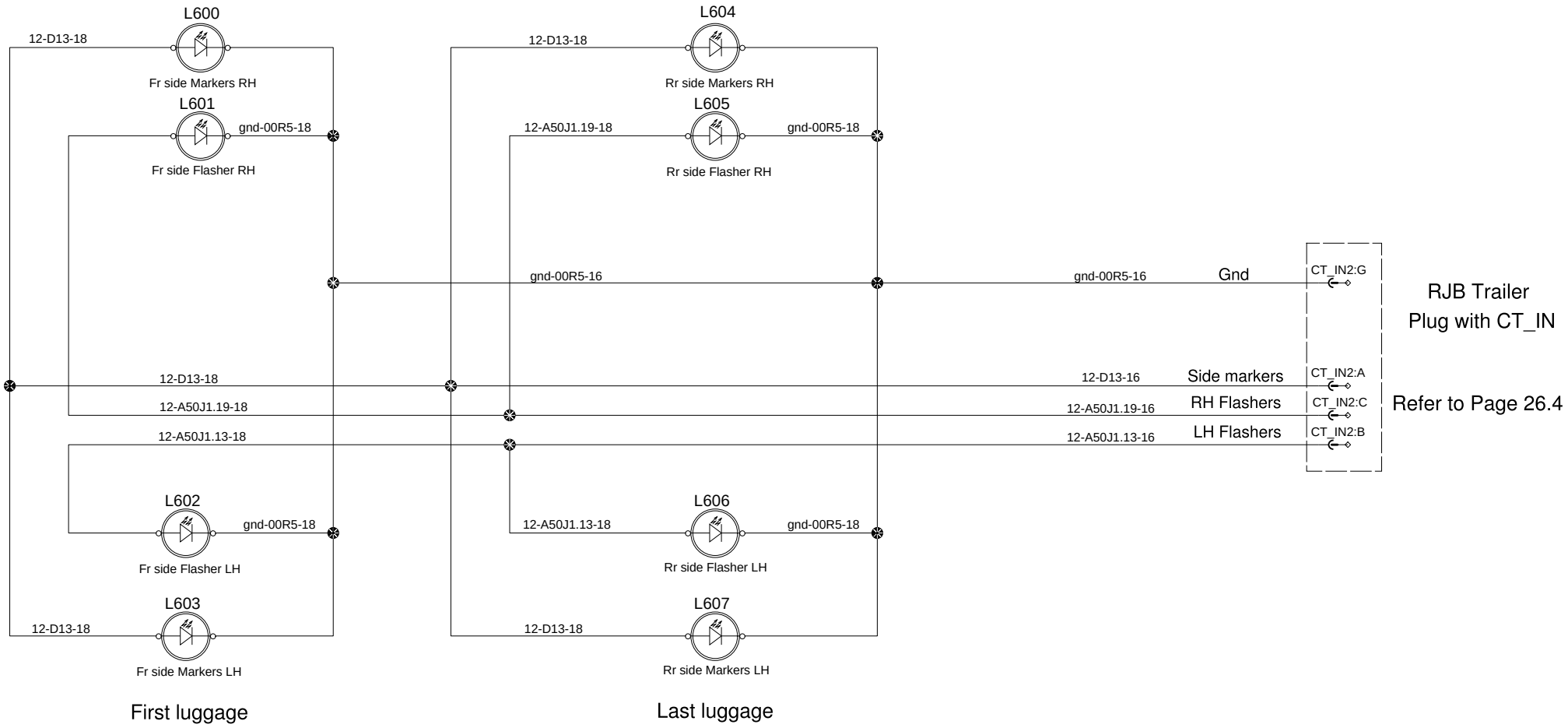
Customer Adaptation